WHOLESALE AGREEMENT

Customer Name: New Dimension Communications, Inc. dba Fast Phones

New Dimension Communications, Inc. dba Fast Phones-Interconnection Agreement	2
Table of Contents	3
General Terms and Conditions	5
Signature Page	25
Att 1 - Resale	26
Att 1 - Resale Discounts & Rates	44
Att 2 - Network Elements & Other Services	45
Att 2 - Exh 1 - GA 271 Requirements	97
Att 2 - Network Element Rates - Exhibit A	103
Att 2 - Network Elements Rates - Exhibit B	114
Att 3 - Network Interconnection	116
Att 3 - Local Interconnection Rates - Renegotiated	144
Att 4 - Collocation	145
Att 4 - Collocation Rates - Exhibit B	199
Att 5 - Access to Numbers and Number Portability	204
Att 6 - Ordering	209
Att 7 - Billing	218
Att 8 - Rights of Way	229
Att 9 - Service Quality Measurements	231
Att 10 - Disaster Recovery Plan	233
Att 11 - BFR and NBR Process	242

Note: This page is not part of the actual signed contract/amendment, but is present for record keeping purposes only.

CLEC Agreement With:

New Dimension Communications, Inc. dba Fast Phones

TABLE OF CONTENTS

General Terms and Conditions

Definitions
1. CLEC Certification
2. Term of the Agreement
3. Nondiscriminatory Access .
4. Court Ordered Requests for Call Detail Records and Other Subscriber Information
5. Liability and Indemnification
6. Intellectual Property Rights and Indemnification
7. Proprietary and Confidential Information
8. Resolution of Disputes
9. Taxes
10. Force Majeure
11. Adoption of Agreements
12. Modification of Agreement
13. Intervening Law
14. Legal Rights
15. Indivisibility
16. Severability
17. Non-Waivers
18. Governing Law
19. Assignments and Transfers
20. Notices
21. Rule of Construction
22. Headings of No Force or Effect
23. Multiple Counterparts
24. Filing of Agreement
25. Compliance with Law
26. Necessary Approvals
27. Good Faith Performance
28. Rates
29. Rate True-Up
30. Survival
31. Entire Agreement

TABLE OF CONTENTS (cont'd)

Attachment 1 - Resale

Attachment 2 - Network Elements and Other Services

Attachment 3 - Network Interconnection

Attachment 4 - Collocation

Attachment 5 - Access to Numbers and Number Portability

Attachment 6 - Pre-Ordering, Ordering, Provisioning and Maintenance and Repair

Attachment 7 - Billing

Attachment 8 - Rights-of-Way, Conduits and Pole Attachments

Attachment 9 - Service Quality Measurements

Attachment 10 – AT&T Disaster Recovery Plan

Attachment 11 - Bona Fide Request and New Business Request Process

AGREEMENT
GENERAL TERMS AND CONDITIONS

THIS AGREEMENT is made by and between BellSouth Telecommunications, Inc., d/b/a AT&T Alabama, AT&T Florida, AT&T Georgia, AT&T Kentucky, AT&T Louisiana, AT&T Mississippi, AT&T North Carolina, AT&T South Carolina and AT&T Tennessee, (AT&T), and New Dimension Communications, Inc. dba Fast Phones (Fast Phones), a South Carolina corporation, and shall be effective on the Effective Date, as defined herein. This Agreement may refer to either AT&T or Fast Phones or both as a "Party" or "Parties."

W I T N E S S E T H

WHEREAS, AT&T is a local exchange telecommunications company authorized to provide Telecommunications Services (as defined below) in the states of Alabama, Florida, Georgia, Kentucky, Louisiana, Mississippi, North Carolina, South Carolina and Tennessee; and

WHEREAS, Fast Phones is or seeks to become a CLEC authorized to provide telecommunications services in the states of South Carolina; and

WHEREAS, pursuant to Sections 251 and 252 of the Act; Fast Phones wishes to purchase certain services from AT&T; and

WHEREAS, the Parties wish to interconnect their facilities, exchange traffic, and perform Local Number Portability (LNP) pursuant to Sections 251 and 252 of the Act as set forth herein; and

WHEREAS, Fast Phones wishes to purchase and AT&T wishes to provide other services as described in this Agreement;

NOW THEREFORE, in consideration of the mutual agreements contained herein, AT&T and Fast Phones agree as follows:

Definitions

Affiliate is defined as a person that (directly or indirectly) owns or controls, is owned or controlled by, or is under common ownership or control with, another person. For purposes of this paragraph, the term "own" means to own an equity interest (or equivalent thereof) of more than ten percent (10%).

Commission is defined as the appropriate regulatory agency in each state of AT&T Southeast Region 9-State (Alabama, Florida, Georgia, Kentucky, Louisiana, Mississippi, North Carolina, South Carolina, and Tennessee).

Competitive Local Exchange Carrier (CLEC) means a telephone company certificated by the Commission to provide local exchange service within AT&T's franchised area.

Effective Date is defined as the date that the Agreement is effective for purposes of rates, terms and conditions and shall be thirty (30) days after the date of the last signature executing the Agreement. Future amendments for rate changes will also be effective thirty (30) days after the date of the last signature executing the amendment.

FCC means the Federal Communications Commission.

Telecommunications means the transmission, between or among points specified by the user, of information of the user's choosing, without change in the form or content of the information as sent and received.

Telecommunications Service means the offering of telecommunications for a fee directly to the public, or to such classes of users as to be effectively available directly to the public, regardless of the facilities used.

Telecommunications Act of 1996 (Act) means Public Law 104-104 of the United States Congress effective February 8, 1996. The Act amended the Communications Act of 1934 (47 U.S.C. Section 1 et. seq.).

1 CLEC Certification

1.1 Fast Phones agrees to provide AT&T in writing Fast Phones's CLEC certification from the Commission for all states covered by this Agreement except Kentucky prior to AT&T filing this Agreement with the appropriate Commission for approval. Additionally, Fast Phones shall provide to AT&T an effective certification to do business issued by the secretary of state or equivalent authority in each state covered by this Agreement.

1.2 To the extent Fast Phones is not certified as a CLEC in each state covered by this Agreement as of the execution hereof, Fast Phones may not purchase services hereunder in that state. Fast Phones will notify AT&T in writing and provide CLEC certification from the Commission when it becomes certified to operate in, as well as an effective certification to do business issued by the secretary of state or equivalent authority for, any other state covered by this Agreement. Upon receipt thereof, AT&T will file this Agreement in that state, and Fast Phones may purchase services pursuant to this Agreement in that state, subject to establishing appropriate accounts in the additional state as described in Attachment 7.

1.3 Should Fast Phones's certification in any state be rescinded or otherwise terminated, AT&T may, at its election, suspend or terminate this Agreement immediately and all monies owed on all outstanding invoices for services provided

in that state shall become due, or AT&T may refuse to provide services hereunder in that state until certification is reinstated in that state, provided such notification is made prior to expiration of the term of this Agreement. Fast Phones shall provide an effective certification to do business issued by the secretary of state or equivalent authority in each state covered by this Agreement.

2 Term of the Agreement

2.1 The initial term of this Agreement shall be five (5) years, beginning on the Effective Date and shall apply to the AT&T Southeast Region 9-State in the state(s) of South Carolina. Notwithstanding any prior agreement of the Parties, the rates, terms and conditions of this Agreement shall not be applied retroactively prior to the Effective Date.

2.2 The Parties agree that by no earlier than two hundred seventy (270) days and no later than one hundred eighty (180) days prior to the expiration of the initial term of this Agreement, the Parties shall commence negotiations for a new agreement to be effective beginning on the expiration date of this Agreement (Subsequent Agreement). If as of the expiration of the initial term of this Agreement, a Subsequent Agreement has not been executed by the Parties, then except as set forth in Sections 2.3.1 and 2.3.2 below, this Agreement shall continue on a month-to-month basis while a Subsequent Agreement is being negotiated. The Parties' rights and obligations with respect to this Agreement after expiration of the initial term shall be as set forth in Section 2.3 below.

2.3 If, within one hundred thirty-five (135) days of commencing the negotiation referred to in Section 2.2 above, the Parties are unable to negotiate new terms, conditions and prices for a Subsequent Agreement, either Party may petition the Commission to establish appropriate rates, terms and conditions for the Subsequent Agreement pursuant to 47 U.S.C. § 252.

2.3.1 Fast Phones may request termination of this Agreement only if it is no longer purchasing services pursuant to this Agreement. Except as set forth in Section 2.3.2 below, notwithstanding the foregoing, in the event that as of the date of expiration of the initial term of this Agreement and conversion of this Agreement to a month-to-month term, the Parties have not entered into a Subsequent Agreement and no arbitration proceeding has been filed in accordance with Section 2.3 above, then AT&T may terminate this Agreement upon sixty (60) days notice to Fast Phones. In the event that AT&T terminates this Agreement as provided above, AT&T shall continue to offer services to Fast Phones pursuant to the rates, terms and conditions set forth in AT&T's then current standard interconnection agreement. In the event that AT&T's standard interconnection agreement becomes effective between the Parties, the Parties may continue to negotiate a Subsequent Agreement.

2.3.2 Notwithstanding Section 2.2 above, in the event that as of the expiration of the initial term of this Agreement the Parties have not entered into a Subsequent

Agreement and no arbitration proceeding has been filed in accordance with Section 2.3 above and AT&T is not providing any services under this Agreement as of the date of expiration of the initial term of this Agreement, then this Agreement shall not continue on a month-to-month basis but shall be deemed terminated as of the expiration date hereof.

2.4 If, at any time during the term of this Agreement, AT&T is unable to contact Fast Phones pursuant to the Notices provision hereof or any other contact information provided by Fast Phones under this Agreement, and there are no active services being provisioned under this Agreement, then AT&T may, at its discretion, terminate this Agreement, without any liability whatsoever, upon sending of notification to Fast Phones pursuant to the Notices section hereof. Furthermore, if after eighteen (18) months following the Effective Date of this Agreement Fast Phones has no active services pursuant to this Agreement, AT&T may terminate this Agreement, without any liability to AT&T, upon notification to Fast Phones pursuant to the Notices section hereof.

2.5 In addition to as otherwise set forth in this Agreement, AT&T reserves the right to suspend access to ordering systems, refuse to process additional or pending applications for service, or terminate service in the event of prohibited, unlawful or improper use of AT&T's facilities or service, abuse of AT&T's facilities or any other material breach of this Agreement, and all monies owed on all outstanding invoices shall become due. In such event, Fast Phones is solely responsible for notifying its customers of any discontinuance of service.

3 Nondiscriminatory Access

When Fast Phones purchases Telecommunications Services from AT&T pursuant to Attachment 1 of this Agreement for the purposes of resale to customers, such services shall be equal in quality, subject to the same conditions, and provided within the same provisioning time intervals that AT&T provides to others, including its customers. To the extent technically feasible, the quality of a Network Element, as well as the quality of the access to such Network Element provided by AT&T to Fast Phones shall be at least equal to that which AT&T provides to itself and shall be the same for all Telecommunications carriers requesting access to that Network Element. The quality of the interconnection between the network of AT&T and the network of Fast Phones shall be at a level that is equal to that which AT&T provides itself, a subsidiary, an Affiliate, or any other party. The interconnection facilities shall be designed to meet the same technical criteria and service standards that are used within AT&T's network and shall extend to a consideration of service quality as perceived by AT&T's customers and service quality as perceived by Fast Phones.

4 Court Ordered Requests for Call Detail Records and Other Subscriber Information

4.1 Subpoenas Directed to AT&T. Where AT&T provides resold services for Fast Phones, AT&T shall respond to subpoenas and court ordered requests delivered

directly to AT&T for the purpose of providing call detail records when the targeted telephone numbers belong to Fast Phones customers. Billing for such requests will be generated by AT&T and directed to the law enforcement agency initiating the request. AT&T shall maintain such information for Fast Phones customers for the same length of time it maintains such information for its own customers.

4.2 Subpoenas Directed to Fast Phones. Where AT&T is providing resold services to Fast Phones, then Fast Phones agrees that in those cases where Fast Phones receives subpoenas or court ordered requests regarding targeted telephone numbers belonging to Fast Phones customers, and where Fast Phones does not have the requested information, Fast Phones will advise the law enforcement agency initiating the request to redirect the subpoena or court ordered request to AT&T for handling in accordance with Section 4.1 above.

4.3 In all other instances, where either Party receives a request for information involving the other Party's customer, the Party receiving the request will advise the law enforcement agency initiating the request to redirect such request to the other Party.

5 Liability and Indemnification

5.1 Fast Phones Liability. In the event that Fast Phones consists of two (2) or more separate entities as set forth in this Agreement and/or any Amendments hereto, or any third party places orders under this Agreement using Fast Phones's company codes or identifiers, all such entities shall be jointly and severally liable for the obligations of Fast Phones under this Agreement.

5.2 Liability for Acts or Omissions of Third Parties. AT&T shall not be liable to Fast Phones for any act or omission of another entity providing any services to Fast Phones.

5.3 Except for any indemnification obligations of the Parties hereunder, each Party's liability to the other for any loss, cost, claim, injury, liability or expense, including reasonable attorneys' fees relating to or arising out of any cause whatsoever, whether based in contract, negligence or other tort, strict liability or otherwise, relating to the performance of this Agreement, shall not exceed a credit for the actual cost of the services or functions not performed or improperly performed. Any amounts paid to Fast Phones pursuant to Attachment 9 hereof shall be credited against any damages otherwise payable to Fast Phones pursuant to this Agreement.

5.3.1 Limitations in Tariffs. A Party may, in its sole discretion, provide in its tariffs and contracts with its customers and third parties that relate to any service, product or function provided or contemplated under this Agreement, that to the maximum extent permitted by Applicable Law, such Party shall not be liable to the customer or third party for (i) any loss relating to or arising out of this Agreement, whether

in contract, tort or otherwise, that exceeds the amount such Party would have charged that applicable person for the service, product or function that gave rise to such loss and (ii) consequential damages. To the extent that a Party elects not to place in its tariffs or contracts such limitations of liability, and the other Party incurs a loss as a result thereof, such Party shall, except to the extent caused by the other Party's gross negligence or willful misconduct, indemnify and reimburse the other Party for that portion of the loss that would have been limited had the first Party included in its tariffs and contracts the limitations of liability that such other Party included in its own tariffs at the time of such loss.

5.3.2 Neither AT&T nor Fast Phones shall be liable for damages to the other Party's terminal location, equipment or customer premises resulting from the furnishing of a service, including, but not limited to, the installation and removal of equipment or associated wiring, except to the extent caused by a Party's negligence or willful misconduct or by a Party's failure to ground properly a local loop after disconnection.

5.3.3 Under no circumstance shall a Party be responsible or liable for indirect, incidental, or consequential damages, including, but not limited to, economic loss or lost business or profits, damages arising from the use or performance of equipment or software, or the loss of use of software or equipment, or accessories attached thereto, delay, error, or loss of data. In connection with this limitation of liability, each Party recognizes that the other Party may, from time to time, provide advice, make recommendations, or supply other analyses related to the services or facilities described in this Agreement, and, while each Party shall use diligent efforts in this regard, the Parties acknowledge and agree that this limitation of liability shall apply to provision of such advice, recommendations, and analyses.

5.3.4 To the extent any specific provision of this Agreement purports to impose liability, or limitation of liability, on either Party different from or in conflict with the liability or limitation of liability set forth in this Section, then with respect to any facts or circumstances covered by such specific provisions, the liability or limitation of liability contained in such specific provision shall apply.

5.4 Indemnification for Certain Claims. Except as otherwise set forth in this Agreement and except to the extent caused by the indemnified Party's gross negligence or willful misconduct, the Party providing services hereunder, its Affiliates and its parent company, shall be indemnified, defended and held harmless by the Party receiving services hereunder against any claim, loss or damage arising from the receiving Party's use of the services provided under this Agreement pertaining to (1) claims for libel, slander or invasion of privacy arising from the content of the receiving Party's own communications, or (2) any claim, loss or damage claimed by any third party (including, but not limited to, a customer of the Party receiving services) arising from the third party's use or reliance on and arising from the Party receiving services use or reliance on the providing Party's services, actions, duties, or obligations arising out of this Agreement.

5.5 Disclaimer. EXCEPT AS SPECIFICALLY PROVIDED TO THE CONTRARY IN THIS AGREEMENT, NEITHER PARTY MAKES ANY REPRESENTATIONS OR WARRANTIES TO THE OTHER PARTY CONCERNING THE SPECIFIC QUALITY OF ANY SERVICES, OR FACILITIES PROVIDED UNDER THIS AGREEMENT. THE PARTIES DISCLAIM, WITHOUT LIMITATION, ANY WARRANTY OR GUARANTEE OF MERCHANTABILITY OR FITNESS FOR A PARTICULAR PURPOSE, ARISING FROM COURSE OF PERFORMANCE, COURSE OF DEALING, OR FROM USAGES OF TRADE.

6 Intellectual Property Rights and Indemnification

6.1 No License. Except as expressly set forth in Section 6.2 below, no patent, copyright, trademark or other proprietary right is licensed, granted or otherwise transferred by this Agreement. The Parties are strictly prohibited from any use, including but not limited to, in the selling, marketing, promoting or advertising of telecommunications services, of any name, service mark, logo or trademark (collectively, the "Marks") of the other Party. The Marks include those Marks owned directly by a Party or its Affiliate(s) and those Marks that a Party has a legal and valid license to use. The Parties acknowledge that they are separate and distinct and that each provides a separate and distinct service and agree that neither Party may, expressly or impliedly, state, advertise or market that it is or offers the same service as the other Party or engage in any other activity that may result in a likelihood of confusion between its own service and the service of the other Party.

6.2 Ownership of Intellectual Property. Any intellectual property that originates from or is developed by a Party shall remain the exclusive property of that Party. Except for a limited, non-assignable, non-exclusive, non-transferable license to use patents or copyrights to the extent necessary for the Parties to use any facilities or equipment (including software) or to receive any service solely as provided under this Agreement, no license in patent, copyright, trademark or trade secret, or other proprietary or intellectual property right, now or hereafter owned, controlled or licensable by a Party, is granted to the other Party. Neither shall it be implied nor arise by estoppel. Any trademark, copyright or other proprietary notices appearing in association with the use of any facilities or equipment (including software) shall remain on the documentation, material, product, service, equipment or software. It is the responsibility of each Party to ensure at no additional cost to the other Party that it has obtained any necessary licenses in relation to intellectual property of third Parties used in its network that may be required to enable the other Party to use any facilities or equipment (including software), to receive any service, or to perform its respective obligations under this Agreement.

6.3 Intellectual Property Remedies

6.3.1 Indemnification. The Party providing a service pursuant to this Agreement will defend the Party receiving such service or data provided as a result of such service against claims of infringement arising solely from the use by the receiving Party of

such service in the manner contemplated under this Agreement and will indemnify the receiving Party for any damages awarded based solely on such claims in accordance with Section 5 above.

6.3.2 Claim of Infringement

6.3.2.1 In the event that use of any facilities or equipment (including software), becomes, or in the reasonable judgment of the Party who owns the affected network is likely to become, the subject of a claim, action, suit, or proceeding based on intellectual property infringement, then said Party, promptly and at its sole expense and sole option, but subject to the limitations of liability set forth below, shall:

6.3.2.2 modify or replace the applicable facilities or equipment (including software) while maintaining form and function, or

6.3.2.3 obtain a license sufficient to allow such use to continue.

6.3.2.4 In the event Sections 6.3.2.2 or 6.3.2.3 above are commercially unreasonable, then said Party may terminate, upon reasonable notice, this contract with respect to use of, or services provided through use of, the affected facilities or equipment (including software), but solely to the extent required to avoid the infringement claim.

6.3.3 Exception to Obligations. Neither Party's obligations under this Section shall apply to the extent the infringement is caused by: (i) modification of the facilities or equipment (including software) by the indemnitee; (ii) use by the indemnitee of the facilities or equipment (including software) in combination with equipment or facilities (including software) not provided or authorized by the indemnitor, provided the facilities or equipment (including software) would not be infringing if used alone; (iii) conformance to specifications of the indemnitee which would necessarily result in infringement; or (iv) continued use by the indemnitee of the affected facilities or equipment (including software) after being placed on notice to discontinue use as set forth herein.

6.3.4 Exclusive Remedy. The foregoing shall constitute the Parties' sole and exclusive remedies and obligations with respect to a third party claim of intellectual property infringement arising out of the conduct of business under this Agreement.

6.3.5 Dispute Resolution. Any claim arising under Sections 6.1 and 6.2 above shall be excluded from the dispute resolution procedures set forth in Section 8 below and shall be brought in a court of competent jurisdiction.

7 Proprietary and Confidential Information

7.1 Proprietary and Confidential Information. It may be necessary for AT&T and Fast Phones, each as the “Discloser,” to provide to the other Party, as “Recipient,” certain proprietary and confidential information (including trade secret information) including but not limited to technical, financial, marketing, staffing

and business plans and information, strategic information, proposals, request for proposals, specifications, drawings, maps, prices, costs, costing methodologies, procedures, processes, business systems, software programs, techniques, customer account data, call detail records and like information (collectively the "Information"). All such Information conveyed in writing or other tangible form shall be clearly marked with a confidential or proprietary legend. Information conveyed orally by the Discloser to Recipient shall be designated as proprietary and confidential at the time of such oral conveyance, shall be reduced to writing by the Discloser within forty-five (45) days thereafter, and shall be clearly marked with a confidential or proprietary legend.

7.2 Use and Protection of Information. Recipient agrees to protect such Information of the Discloser provided to Recipient from whatever source from distribution, disclosure or dissemination to anyone except employees consultants, contractors and agents of Recipient or its Affiliates with a need to know such Information solely in conjunction with Recipient's analysis of the Information and for no other purpose except as authorized herein or as otherwise authorized in writing by the Discloser. Recipients may make tangible or electronic copies, notes, summaries or extracts of Information only as necessary for use as authorized herein. All tangible or electronic copies, notes, summaries or extracts must be marked with the same confidential and proprietary notice as appears on the original. Information remains at all times the property of Discloser. Upon Discloser's request, all or any requested portion of the Information (including, but not limited to, tangible and electronic copies, notes, summaries or extracts of any Information) will be promptly returned to Discloser or destroyed, and Recipient will provide Discloser with written certification stating that such information has been returned or destroyed.

7.3 Exceptions

7.3.1 Recipient will not have an obligation to protect any portion of the Information which:

7.3.2 (a) is made publicly available by the Discloser or lawfully by a nonparty to this Agreement; (b) is lawfully obtained by Recipient from any source other than Discloser; (c) is previously known to Recipient without an obligation to keep it confidential; or (d) is released from the terms of this Agreement by Discloser upon written notice to Recipient.

7.4 Recipient agrees to use the Information solely for the purposes of negotiations pursuant to 47 U.S.C. § 251 or in performing its obligations under this Agreement and for no other entity or purpose, except as may be otherwise agreed to in writing by the Parties. Nothing herein shall prohibit Recipient from providing information requested by the FCC or a state regulatory agency with jurisdiction over this matter, or to support a request for arbitration or an allegation of failure to negotiate in good faith.

7.5 Recipient agrees not to publish or use the Information for any advertising, sales or marketing promotions, press releases, or publicity matters that refer either directly or indirectly to the Information or to the Discloser or any of its affiliated companies.

7.6 The disclosure of Information neither grants nor implies any license to the Recipient under any trademark, patent, copyright, application or other intellectual property right that is now or may hereafter be owned by the Discloser.

7.7 Survival of Confidentiality Obligations. The Parties' rights and obligations under this Section 7 shall survive and continue in effect until two (2) years after the expiration or termination date of this Agreement with regard to all Information exchanged during the term of this Agreement. Thereafter, the Parties' rights and obligations hereunder survive and continue in effect with respect to any Information that is a trade secret under applicable law.

8 Resolution of Disputes

Except as otherwise stated in this Agreement, if any dispute arises as to the interpretation of any provision of this Agreement or as to the proper implementation of this Agreement, the aggrieved Party, if it elects to pursue resolution of the dispute, shall petition the Commission for a resolution of the dispute. However, each Party reserves any rights it may have to seek judicial review of any ruling made by the Commission concerning this Agreement.

9 Taxes

9.1 Definition. For purposes of this Section, the terms "taxes" and "fees" shall include but not be limited to federal, state or local sales, use, excise, gross receipts or other taxes or tax-like fees of whatever nature and however designated (including tariff surcharges and any fees, charges or other payments, contractual or otherwise, for the use of public streets or rights of way, whether designated as franchise fees or otherwise) imposed, or sought to be imposed, on or with respect to the services furnished hereunder or measured by the charges or payments therefor, excluding any taxes levied on income.

9.2 Taxes and Fees Imposed Directly On Either Providing Party or Purchasing Party

9.2.1 Taxes and fees imposed on the providing Party, which are not permitted or required to be passed on by the providing Party to its customer, shall be borne and paid by the providing Party.

9.2.2 Taxes and fees imposed on the purchasing Party, which are not required to be collected and/or remitted by the providing Party, shall be borne and paid by the purchasing Party.

9.3 Taxes and Fees Imposed on Purchasing Party But Collected And Remitted By Providing Party

9.3.1 Taxes and fees imposed on the purchasing Party shall be borne by the purchasing Party, even if the obligation to collect and/or remit such taxes or fees is placed on the providing Party.

9.3.2 To the extent permitted by applicable law, any such taxes and/or fees shall be shown on applicable billing documents between the Parties. Notwithstanding the foregoing, the purchasing Party shall remain liable for any such taxes and fees regardless of whether they are actually billed by the providing Party at the time that the respective service is billed.

9.3.3 If the purchasing Party determines that in its opinion any such taxes or fees are not applicable, the providing Party shall not bill such taxes or fees to the purchasing Party if the purchasing Party provides written certification, reasonably satisfactory to the providing Party, stating that it is exempt or otherwise not subject to the tax or fee, setting forth the basis therefor, and satisfying any other requirements under applicable law. If any authority seeks to collect any such tax or fee that the purchasing Party has determined and certified not to be applicable, or any such tax or fee that was not billed by the providing Party, the purchasing Party may contest the same in good faith, at its own expense. In any such contest, the purchasing Party shall promptly furnish the providing Party with copies of all filings in any proceeding, protest, or legal challenge, all rulings issued in connection therewith, and all correspondence between the purchasing Party and the taxing authority.

9.3.4 In the event that all or any portion of an amount sought to be collected must be paid in order to contest the imposition of any such tax or fee, or to avoid the existence of a lien on the assets of the providing Party during the pendency of such contest, the purchasing Party shall be responsible for such payment and shall be entitled to the benefit of any refund or recovery. The purchasing Party shall have the right to contest, at its own expense, any such tax or fee that it believes is not applicable or was paid by it in error. If requested in writing by the purchasing Party, the providing Party shall facilitate such contest either by assigning to the purchasing Party its right to claim a refund of such tax or fee, if such an assignment is permitted under applicable law, or, if an assignment is not permitted, by filing and pursuing a claim for refund on behalf of the purchasing Party but at the purchasing Party's expense.

9.3.5 If it is ultimately determined that any additional amount of such a tax or fee is due to the imposing authority, the purchasing Party shall pay such additional amount, including any interest and penalties thereon.

9.3.6 Notwithstanding any provision to the contrary, the purchasing Party shall protect, indemnify and hold harmless (and defend at the purchasing Party's expense) the providing Party from and against any such tax or fee, interest or penalties thereon, or other charges or payable expenses (including reasonable attorney fees) with

respect thereto, which are incurred by the providing Party in connection with any claim for or contest of any such tax or fee.

9.3.7 Each Party shall notify the other Party in writing of any assessment, proposed assessment or other claim for any additional amount of such a tax or fee by a taxing authority; provided, however, that the failure of a Party to provide notice shall not relieve the other Party of any obligations hereunder.

9.4 Taxes and Fees Imposed on Providing Party But Passed On To Purchasing Party

9.4.1 Taxes and fees imposed on the providing Party, which are permitted or required to be passed on by the providing Party to its customer, shall be borne by the purchasing Party.

9.4.2 To the extent permitted by applicable law, any such taxes and/or fees shall be shown on applicable billing documents between the Parties. Notwithstanding the foregoing, the purchasing Party shall remain liable for any such taxes and fees regardless of whether they are actually billed by the providing Party at the time that the respective service is billed.

9.4.3 If the purchasing Party disagrees with the providing Party's determination as to the application of or basis for any such tax or fee, the Parties shall consult with respect to the imposition and billing of such tax or fee. Notwithstanding the foregoing, the providing Party shall retain ultimate responsibility for determining whether and to what extent any such taxes or fees are applicable, and the purchasing Party shall abide by such determination and pay such taxes or fees to the providing Party. The providing Party shall further retain ultimate responsibility for determining whether and how to contest the imposition of such taxes and fees; provided, however, that any such contest undertaken at the request of the purchasing Party shall be at the purchasing Party's expense.

9.4.4 In the event that all or any portion of an amount sought to be collected must be paid in order to contest the imposition of any such tax or fee, or to avoid the existence of a lien on the assets of the providing Party during the pendency of such contest, the purchasing Party shall be responsible for such payment and shall be entitled to the benefit of any refund or recovery. The purchasing Party shall have the right to contest, at its own expense, any such tax or fee that it believes is not applicable or was paid by it in error. If requested in writing by the purchasing Party, the providing Party shall facilitate such contest either by assigning to the purchasing Party its right to claim a refund of such tax or fee, if such an assignment is permitted under applicable law, or, if an assignment is not permitted, by filing and pursuing a claim for refund on behalf of the purchasing Party but at the purchasing Party's expense.

9.4.5 If it is ultimately determined that any additional amount of such a tax or fee is due to the imposing authority, the purchasing Party shall pay such additional amount, including any interest and penalties thereon.

9.4.6 Notwithstanding any provision to the contrary, the purchasing Party shall protect, indemnify and hold harmless (and defend at the purchasing Party's expense) the providing Party from and against any such tax or fee, interest or penalties thereon, or other charges or payable expenses (including reasonable attorneys' fees) with respect thereto, which are incurred by the providing Party in connection with any claim for or contest of any such tax or fee.

9.4.7 Each Party shall notify the other Party in writing of any assessment, proposed assessment or other claim for any additional amount of such a tax or fee by a taxing authority; provided, however, that the failure of a Party to provide notice shall not relieve the other Party of any obligations hereunder.

9.5 Additional Provisions Applicable to All Taxes and Fees

9.5.1 In any contest of a tax or fee by one Party, the other Party shall cooperate fully by providing records, testimony and such additional information or assistance as may reasonably be necessary to pursue the contest. Further, the other Party shall be reimbursed for any reasonable and necessary out-of-pocket copying and travel expenses incurred in assisting in such contest.

9.5.2 Notwithstanding any provision of this Agreement to the contrary, any administrative, judicial, or other proceeding concerning the application or amount of a tax or fee shall be maintained in accordance with the provisions of this Section and any applicable federal, state or local law governing the resolution of such disputed tax or fee; and under no circumstances shall either Party have the right to bring a dispute related to the application or amount of a tax or fee before a regulatory authority.

10 Force Majeure

In the event performance of this Agreement, or any obligation hereunder, is either directly or indirectly prevented, restricted, or interfered with by reason of fire, flood, earthquake or like acts of God, wars, revolution, civil commotion, explosion, acts of public enemy, embargo, acts of the government in its sovereign capacity, labor difficulties, including without limitation, strikes, slowdowns, picketing, or boycotts, unavailability of equipment from vendor, changes requested by Fast Phones, or any other circumstances beyond the reasonable control and without the fault or negligence of the Party affected, the Party affected shall be excused from such performance on a day-to-day basis to the extent of such prevention, restriction, or interference (and the other Party shall likewise be excused from performance of its obligations on a day-to-day basis until the delay, restriction or interference has ceased); provided, however, that the Party so affected shall use diligent efforts to avoid or remove such causes of non-performance and both Parties shall proceed whenever such causes are removed or cease. The Party affected shall provide notice of the Force Majeure event within a reasonable period of time following such an event.

11 Adoption of Agreements

Pursuant to 47 U.S.C. § 252(i) and 47 C.F.R. § 51.809, AT&T shall make available to Fast Phones any entire interconnection agreement filed and approved pursuant to 47 U.S.C. § 252. The adopted agreement shall apply to the same states as the agreement that was adopted, and the term of the adopted agreement shall expire on the same date as set forth in the agreement that was adopted.

12 Modification of Agreement

12.1 If Fast Phones changes its name or makes changes to its company structure or identity due to a merger, acquisition, transfer or any other reason, it is the responsibility of Fast Phones to notify AT&T of said change, request that an amendment to this Agreement, if necessary, be executed to reflect said change and notify the Commission of such modification of company structure in accordance with the state rules governing such modification in company structure if applicable. Additionally, Fast Phones shall provide AT&T with any necessary supporting documentation, which may include, but is not limited to, a credit application, Application for Master Account, proof of authority to provide telecommunications services, the appropriate Operating Company Number (OCN) for each state as assigned by National Exchange Carrier Association (NECA), Carrier Identification Code (CIC), Access Customer Name and Abbreviation (ACNA), AT&T's blanket form letter of authority (LOA), Misdirected Number form and a tax exemption certificate.

12.2 No modification, amendment, supplement to, or waiver of the Agreement or any of its provisions shall be effective and binding upon the Parties unless it is made in writing and duly signed by the Parties.

13 Intervening Law

This Agreement is the result of negotiations between the Parties and may incorporate certain provisions that resulted from arbitration by the appropriate state Commission(s). In entering into this Agreement and any Amendments to such Agreement and carrying out the provisions herein, neither Party waives, but instead expressly reserves, all of its rights, remedies and arguments with respect to any orders, decisions, legislation or proceedings and any remands thereof and any other federal or state regulatory, legislative or judicial action(s) which the Parties have not yet fully incorporated into this Agreement or which may be the subject of further review. If any action by any state or federal regulatory or legislative body or court of competent jurisdiction invalidates, modifies, or stays the enforcement of laws or regulations that were the basis or rationale for any rate(s), term(s) and/or condition(s) ("Provisions") of the Agreement and/or otherwise affects the rights or obligations of either Party that are addressed by this Agreement, the affected Provision(s) shall be immediately invalidated, modified or stayed consistent with the action of the regulatory or legislative body or court of competent jurisdiction upon the written request of either Party in accordance with Section 20.1 below ("Written Notice"). With respect to any Written Notices

hereunder, the Parties shall have sixty (60) days from the Written Notice to attempt to reach agreement on appropriate conforming modifications to the Agreement. If the Parties are unable to agree upon the conforming modifications within sixty (60) days from the Written Notice, any disputes between the Parties concerning such actions shall be resolved pursuant to the dispute resolution process provided for in this Agreement.

14 Legal Rights

Execution of this Agreement by either Party does not confirm or imply that the executing Party agrees with any decision(s) issued pursuant to the Telecommunications Act of 1996 and the consequences of those decisions on specific language in this Agreement. Neither Party waives its rights to appeal or otherwise challenge any such decision(s) and each Party reserves all of its rights to pursue any and all legal and/or equitable remedies, including appeals of any such decision(s).

15 Indivisibility

Subject to Section 15 below, the Parties intend that this Agreement be indivisible and nonseverable, and each of the Parties acknowledges that it has assented to all of the covenants and promises in this Agreement as a single whole and that all of such covenants and promises, taken as a whole, constitute the essence of the contract. Without limiting the generality of the foregoing, each of the Parties acknowledges that any provision by AT&T of collocation space under this Agreement is solely for the purpose of facilitating the provision of other services under this Agreement as set forth in Attachment 4. The Parties further acknowledge that this Agreement is intended to constitute a single transaction and that the obligations of the Parties under this Agreement are interdependent.

16 Severability

If any provision of this Agreement, or part thereof, shall be held invalid or unenforceable in any respect, the remainder of the Agreement or provision shall not be affected thereby, provided that the Parties shall negotiate in good faith to reformulate such invalid provision, or part thereof, or related provision, to reflect as closely as possible the original intent of the parties, consistent with applicable law, and to effectuate such portions thereof as may be valid without defeating the intent of such provision. In the event the Parties are unable to mutually negotiate such replacement language, either Party may elect to pursue the dispute resolution process set forth in Section 8 above.

17 Non-Waivers

A failure or delay of either Party to enforce any of the provisions hereof, to exercise any option which is herein provided, or to require performance of any of the provisions hereof shall in no way be construed to be a waiver of such provisions or options, and each Party, notwithstanding such failure, shall have the right thereafter to insist upon the performance of any and all of the provisions of this Agreement.

18 Governing Law

Where applicable, this Agreement shall be governed by and construed in accordance with federal and state substantive telecommunications law, including rules and regulations of the FCC and appropriate Commission. In all other respects, this Agreement shall be governed by and construed and enforced in accordance with the laws of the State of Georgia without regard to its conflict of laws principles.

19 Assignments and Transfers

19.1 Any assignment by either Party to any entity of any right, obligation or duty, or of any other interest hereunder, in whole or in part, without the prior written consent of the other Party shall be void. The assignee must provide evidence of a Commission approved certification to provide Telecommunications Service in each state that Fast Phones is entitled to provide Telecommunications Service. After AT&T's consent, the Parties shall amend this Agreement to reflect such assignments and shall work cooperatively to implement any changes required due to such assignment. All obligations and duties of any Party under this Agreement shall be binding on all successors in interest and assigns of such Party. No assignment or delegation hereof shall relieve the assignor of its obligations under this Agreement in the event that the assignee fails to perform such obligations. Notwithstanding anything to the contrary in this Section, Fast Phones shall not be permitted to assign this Agreement in whole or in part to any entity unless either (1) Fast Phones pays all bills, past due and current, under this Agreement, or (2) Fast Phones's assignee expressly assumes liability for payment of such bills.

19.2 In the event that Fast Phones desires to transfer any services hereunder to another provider of Telecommunications Service, or Fast Phones desires to assume hereunder any services provisioned by AT&T to another provider of Telecommunications Service, such transfer of services shall be subject to separately negotiated rates, terms and conditions.

20 Notices

20.1 Every notice, consent or approval of a legal nature, required or permitted by this Agreement shall be in writing and shall be delivered either by hand, by overnight courier or by US mail postage prepaid, or email if an email address is listed below, addressed to:

AT&T

AT&T Local Contract Manager
600 North 19th Street, 10th floor
Birmingham, AL 35203

and

Business Markets Attorney
Suite 4300
675 West Peachtree Street
Atlanta, GA 30375

New Dimension Communications, Inc. dba Fast Phones

New Dimension Communications, Inc.
d/b/a Fast Phones
Wayne Green
President & CEO
5710 Rivers Avenue
Suite 104
North Charleston, SC 29406
843-412-8700
ndci@comcast.net

or at such other address as the intended recipient previously shall have designated by written notice to the other Party.

20.2 Unless otherwise provided in this Agreement, notice by mail shall be effective on the date it is officially recorded as delivered by return receipt or equivalent, and in the absence of such record of delivery, it shall be presumed to have been delivered the fifth day, or next business day after the fifth day, after it was deposited in the mails.

20.3 Notwithstanding the above, AT&T will post to AT&T's Interconnection Web site changes to business processes and policies and shall post to AT&T's Interconnection Web site or submit through applicable electronic systems, other service and business related notices not requiring an amendment to this Agreement.

21 Rule of Construction

No rule of construction requiring interpretation against the drafting Party hereof shall apply in the interpretation of this Agreement.

22 Headings of No Force or Effect

The headings of Articles and Sections of this Agreement are for convenience of reference only, and shall in no way define, modify or restrict the meaning or interpretation of the terms or provisions of this Agreement.

23 Multiple Counterparts

This Agreement may be executed in multiple counterparts, each of which shall be deemed an original, but all of which shall together constitute but one and the same document.

24 Filing of Agreement

This Agreement, and any amendments hereto, shall be filed with the appropriate state regulatory agency pursuant to the requirements of Section 252 of the Act, or as otherwise required by the state and the Parties shall share equally in any applicable fees. Notwithstanding the foregoing, this Agreement shall not be submitted for approval by the appropriate state regulatory agency unless and until such time as Fast Phones is duly certified as a local exchange carrier in such state, except as otherwise required by a Commission.

25 Compliance with Law

The Parties have negotiated their respective rights and obligations pursuant to substantive Federal and State Telecommunications law and this Agreement is intended to memorialize the Parties' mutual agreement with respect to each Party's rights and obligations under the Act and applicable FCC and Commission orders, rules and regulations. Nothing contained herein, nor any reference to applicable rules and orders, is intended to expand on the Parties' rights and obligations as set forth herein. This Agreement also contains certain provisions that were negotiated without regard to the Parties' obligations as set forth Section 251 of the Act. To the extent the provisions of this Agreement differ from the provisions of any Federal or State Telecommunications statute, rule or order in effect as of the execution of this Agreement, this Agreement shall control. Each Party shall comply at its own expense with all other laws of general applicability.

26 Necessary Approvals

Each Party shall be responsible for obtaining and keeping in effect all approvals from, and rights granted by, governmental authorities, building and property owners, other carriers, and any other persons that may be required in connection with the performance of its obligations under this Agreement. Each Party shall reasonably cooperate with the other Party in obtaining and maintaining any required approvals and rights for which such Party is responsible.

27 Good Faith Performance

Each Party shall act in good faith in its performance under this Agreement and, in each case in which a Party's consent or agreement is required or requested hereunder, such Party shall not unreasonably withhold or delay such consent or agreement.

28 Rates

28.1 Fast Phones shall pay the charges set forth in this Agreement. In the event that AT&T is unable to bill the applicable rate or no rate is established or included in this Agreement for any services provided pursuant to this Agreement, AT&T reserves the right to back bill Fast Phones for such rate or for the difference

between the rate actually billed and the rate that should have been billed pursuant to this Agreement; provided, however, that subject to Fast Phones's agreement to the limitation regarding billing disputes as described in Section 2.2 of Attachment 7 hereof, AT&T shall not back bill any amounts for services rendered more than twelve (12) months prior to the date that the charges or additional charges for such services are actually billed. Notwithstanding the foregoing, both Parties recognize that situations may exist which could necessitate back billing beyond twelve (12) months. These exceptions are:

- Charges connected with jointly provided services whereby meet point billing guidelines require either Party to rely on records provided by a third party and such records have not been provided in a timely manner;
- Charges incorrectly billed due to erroneous information supplied by the non-billing Party;
- Charges for which a regulatory body has granted, or a regulatory change permits, the billing Party the authority to back bill.

28.2 To the extent a rate element is omitted or no rate is established, AT&T has the right not to provision such service until the Agreement is amended to include such rate.

28.3 To the extent Fast Phones requests services not included in this Agreement, such services shall be provisioned pursuant to the rates, terms and conditions set forth in the applicable tariffs or a separately negotiated Agreement, unless the Parties agree to amend this Agreement to include such service prospectively.

29 Rate True-Up

29.1 This section applies to rates that are expressly subject to true-up**.**

29.2 The rates shall be trued-up, either up or down, based on final prices determined either by further agreement between the Parties, or by a final and effective order of the Commission. The Parties shall implement the true-up by comparing the actual volumes and demand for each item, together with the rates for each item, with the final prices determined for each item. Each Party shall keep its own records upon which the true-up can be based, and any final payment from one Party to the other shall be in an amount agreed upon by the Parties based on such records. In the event of any discrepancy between the records or disagreement between the Parties regarding the amount of such true-up, the dispute shall be subject to the dispute resolution process set forth in this Agreement.

29.3 A final and effective order of the Commission that forms the basis of a true-up shall be based upon cost studies submitted by either or both Parties to the

Commission and shall be binding upon AT&T and Fast Phones specifically or upon all carriers generally, such as a generic cost proceeding.

30 Survival

The Parties' obligations under this Agreement which by their nature are intended to continue beyond the termination or expiration of this Agreement shall survive the termination or expiration of this Agreement.

31 Entire Agreement

31.1 This Agreement means the General Terms and Conditions, the Attachments hereto and all documents identified therein, as such may be amended from time to time and which are incorporated herein by reference, all of which, when taken together, are intended to constitute one indivisible agreement. This Agreement sets forth the entire understanding and supersedes prior agreements between the Parties relating to the subject matter contained in this Agreement and merges all prior discussions between them. Any orders placed under prior agreements between the Parties shall be governed by the terms of this Agreement and Fast Phones acknowledges and agrees that any and all amounts and obligations owed for services provisioned or orders placed under prior agreements between the Parties, related to the subject matter hereof, shall, as of the Effective Date, be due and owing under this Agreement and be governed by the terms and conditions of this Agreement as if such services or orders were provisioned or placed under this Agreement. Neither Party shall be bound by any definition, condition, provision, representation, warranty, covenant or promise other than as expressly stated in this Agreement or as is contemporaneously or subsequently set forth in writing and executed by a duly authorized officer or representative of the Party to be bound thereby.

31.2 Any reference throughout this Agreement to a tariff, industry guideline, AT&T's technical guideline or reference, AT&T business rule, guide or other such document containing processes or specifications applicable to the services provided pursuant to this Agreement, shall be construed to refer to only those provisions thereof that are applicable to these services, and shall include any successor or replacement versions thereof, all as they are amended from time to time and all of which are incorporated herein by reference, and may be found at AT&T's Interconnection Web site at: www.interconnection.bellsouth.com. References to state tariffs throughout this Agreement shall be to the tariff for the state in which the services were provisioned; provided, however, that in any state where certain AT&T services or tariff provisions have been or become deregulated or detariffed, any reference in this Agreement to a detariffed or deregulated service or provision of such tariff shall be deemed to refer to the service description, price list or other agreement pursuant to which AT&T provides such services as a result of detariffing or deregulation.

BellSouth Telecommunications, Inc. d/b/a AT&T Alabama, AT&T Florida, AT&T Georgia, AT&T Kentucky, AT&T Louisiana, AT&T Mississippi, AT&T North Carolina, AT&T South Carolina and AT&T Tennessee

By: Kristen E. Shore

Name: Kristen E. Shore

Title: Director

Date: 11/15/07

New Dimension Communications, Inc. dba Fast Phones

By: Wayne A Green

Name: Wayne A Green

Title: President

Date: 11/14/2007

FACILITIES-BASED OCN # 196E

ACNA NEA

Version: 2Q07 Standard ICA
04/26/07

CCCS 25 of 248

Attachment 1

Resale

Table of Contents

1. Discount Rates 3

2. Definition of Terms 3

3. General Provisions 3

4 AT&T's Provision of Services to Fast Phones 6

5. Maintenance of Services 7

6. Discontinuance of Service 7

7. White Pages Listings 8

8. Operator Services (Operator Call Processing and Directory Assistance) 9

9. Branding for Wholesale OCP and DA 11

10. LIDB 11

11. Revenue Accounting Office (RAO) Hosting 12

12. Optional Daily Usage File (ODUF) 12

13. Enhanced Optional Daily Usage File (EODUF) 12

Resale Restrictions ..... Exhibit A

Optional Daily Usage File (ODUF) ..... Exhibit B

Enhanced Option Daily Usage File (EODUF) ..... Exhibit C

Resale Discounts and Rates ..... Exhibit D

RESALE

1. Discount Rates

1.1 The discounts rates applied to Fast Phones's purchases of AT&T Telecommunications Services for the purpose of resale shall be as set forth in Exhibit D. Such discounts have been determined by the applicable Commission to reflect the costs avoided by AT&T when selling a service for wholesale purposes.

1.2 The Telecommunications Services available for purchase by Fast Phones for the purposes of resale to Fast Phones's customers shall be available at AT&T's tariffed rates less the discount reflected in Exhibit D and subject to the exclusions and limitations in Exhibit A.

2. Definition of Terms

For purposes of this Attachment only, the following terms shall have the definitions as set forth below:

2.1 Customer of Record means the entity responsible for placing application for service; requesting additions, rearrangements, maintenance or discontinuance of service; payment in full of charges incurred such as nonrecurring, monthly recurring, toll, directory assistance, etc.

2.2 End User Customer Location means the physical location of the premises where a customer makes use of the Telecommunications Services.

2.3 New Services means functions, features or capabilities that are not currently offered by AT&T. This includes packaging of existing services or combining a new function, feature or capability with an existing service.

2.4 Resale means an activity wherein a certificated CLEC, such as Fast Phones, subscribes to the retail Telecommunications Services of AT&T and then offers those retail Telecommunications Services to the public.

3. General Provisions

3.1 All of the negotiated rates, terms and conditions set forth in this Attachment pertain to the resale of AT&T's retail Telecommunications Services and other services specified in this Attachment. Subject to effective and applicable FCC and Commission rules and orders, AT&T shall make available to Fast Phones for resale those Telecommunications Services AT&T makes available, pursuant to its General Subscriber Services Tariff (GSST) and Private Line Services Tariff, to customers who are not Telecommunications carriers.

3.1.1 When Fast Phones provides Resale service in a cross boundary area (customer is physically located in a particular state and is served by a central office in an adjoining state) the rates, regulations and discounts for the state in which the serving central office is located will apply. Billing will be from the state in which the customer is located.

3.2 Fast Phones as a reseller of Lifeline and Link-Up Services hereby certifies that it has and will comply with the FCC requirements governing the Lifeline and Link-Up programs as set forth in 47 C.F.R. § 54.417(a) and (b). This includes the requirements set forth in AT&T's GSST, Sections A3.31 and A4.7.

3.2.1 Fast Phones shall maintain records to document FCC or applicable state eligibility and verification records to document compliance governing the Lifeline/Link-Up programs for the three (3) full preceding calendar years, and Fast Phones shall provide such documentation to the FCC or it's Administrator upon request.

3.2.2 In Tennessee, if Fast Phones does not resell Lifeline service to any end users, and if Fast Phones agrees to order an appropriate Operator Services/Directory Assistance block as set forth in AT&T's GSST, the discount shall be twenty-one point fifty-six percent (21.56%).

3.2.2.1 In the event Fast Phones resells Lifeline service to any end user in Tennessee, AT&T will begin applying the sixteen percent (16%) discount rate to all services. Upon Fast Phones and AT&T's implementation of a billing arrangement whereby a separate Master Account (Q-account) associated with a separate OCN is established for billing of Lifeline service end users, the discount shall be applied as set forth in Section 3.2.2 above for the non-Lifeline affected Master Account (Q-account).

3.2.2.2 Fast Phones must provide written notification to AT&T within thirty (30) days prior to either providing its own operator services/directory services or ordering the appropriate operator services/directory assistance blocking, to qualify for the higher discount rate of twenty-one point fifty-six percent (21.56%).

3.3 Fast Phones may purchase resale services from AT&T for its own use in operating its business. The resale discount will apply to those services under the following conditions:

3.3.1 Fast Phones must resell services to other end users.

3.3.2 Fast Phones cannot be a CLEC for the single purpose of selling to itself.

3.3.3 Fast Phones will be the Customer of Record for all services purchased from AT&T. Except as specified herein, AT&T will take orders from, bill and receive payment from Fast Phones for said services.

3.4 Fast Phones will be AT&T's single point of contact for all services purchased pursuant to this Agreement. AT&T shall have no contact with the customer except to the extent provided for herein.

3.5 AT&T will continue to bill the customer for any services that the customer specifies it wishes to receive directly from AT&T. AT&T maintains the right to serve directly any customer within the service area of Fast Phones. AT&T will continue to market directly its own Telecommunications products and services and in doing so may establish independent relationships with customers of Fast Phones. Neither Party shall interfere with the right of any person or entity to obtain service directly from the other Party.

3.5.1 AT&T will accept a request from another CLEC for conversion of the customer's

service from Fast Phones to such other CLEC. Upon completion of the conversion AT&T will notify Fast Phones that such conversion has been completed.

3.5.2 When a customer of Fast Phones or AT&T elects to change his/her carrier to the other Party, both Parties agree to release the customer's service to the other Party concurrent with the due date of the service order, which shall be established based on the standard interval for the customer's requested service as set forth in the AT&T Product and Services Interval Guide.

3.5.3 AT&T and Fast Phones will refrain from contacting an customer who has placed or whose selected carrier has placed on the customer's behalf an order to change the customer's service provider from AT&T or Fast Phones to the other Party until such time that the order for service has been completed.

3.6 Current telephone numbers may normally be retained by the customer and are assigned to the service furnished. However, neither Party nor the customer has a property right to the telephone number or any other call number designation associated with services furnished by AT&T, and no right to the continuance of service through any particular central office. AT&T reserves the right to change such numbers, or the central office designation associated with such numbers, or both, whenever AT&T deems it necessary to do so in the conduct of its business and in accordance with AT&T practices and procedures on a nondiscriminatory basis.

3.7 Service is furnished subject to the condition that it will not be used for any unlawful purpose.

3.8 Service will be discontinued if any law enforcement agency advises that the service being used is in violation of the law.

3.9 AT&T can refuse service when it has grounds to believe that service will be used in violation of the law.

3.10 If Fast Phones or its customers utilize an AT&T resold Telecommunications Service in a manner other than that for which the service was originally intended as described in AT&T's retail tariffs Fast Phones has the responsibility to notify AT&T. AT&T will only provision and maintain said service consistent with the terms and conditions of the tariff describing said service.

3.11 Facilities and/or equipment utilized by AT&T to provide service to Fast Phones remain the property of AT&T.

3.12 <u>Service Ordering and Operations Support Systems (OSS)</u>

3.12.1 Fast Phones must order services through resale interfaces, i.e., the Local Carrier Service Center (LCSC) and/or appropriate Complex Resale Support Group (CRSG) pursuant to this Agreement. Fast Phones may submit a Local Service Request (LSR) electronically as set forth in Attachment 6. Service orders will be in a standard format designated by AT&T.

3.12.2 AT&T messaging services set forth inAT&T's Messaging Service Re-Seller Information Package shall be made available for resale without the wholesale

discount.

3.13 AT&T's Inside Wire Maintenance Service Plan is available for resale at rates, terms and conditions as set forth by AT&T and without the wholesale discount.

3.14 In the event Fast Phones acquires a customer whose service is provided pursuant to an AT&T Special Assembly, AT&T shall make available to Fast Phones that Special Assembly at the wholesale discount at Fast Phones's option. Fast Phones shall be responsible for all terms and conditions of such Special Assembly including but not limited to termination liability if applicable.

3.15 AT&T shall provide 911/E911 for Fast Phones customers in the same manner that it is provided to AT&T customers. AT&T shall provide and validate Fast Phones customer information to the Public Safety Answering Point (PSAP). AT&T shall use its service order process to update and maintain, on the same schedule that it uses for its customers, the Fast Phones customer information in the Automatic Location Identification/Data Management System (ALI/DMS) databases used to support 911/E911 services.

3.16 Pursuant to 47 C.F.R. § 51.617, AT&T shall bill to Fast Phones, and Fast Phones shall pay, the End User Common Line (EUCL) charges identical to the EUCL charges AT&T bills its customers.

4 AT&T's Provision of Services to Fast Phones

4.1 Resale of AT&T services shall be as follows:

4.1.1 The resale of Telecommunications Services shall be limited to users and uses conforming to the class of service restrictions.

4.1.2 Hotel and Hospital PBX services are the only Telecommunications Services available for resale to Hotel/Motel and Hospital customers, respectively. Similarly, Access Line Service for Customer Provided Coin Telephones is the only local service available for resale to Payphone Service Provider (PSP) customers. Shared Tenant Service customers can only be sold those local exchange access services available in AT&T's GSST Section A23, Shared Tenant Service Section in the states of Florida, Georgia, North Carolina and South Carolina, and in A27 in the states of Alabama, Kentucky, Louisiana, Mississippi and Tennessee.

4.1.3 AT&T reserves the right to periodically audit services purchased by Fast Phones to establish authenticity of use. Such audit shall not occur more than once in a calendar year. Fast Phones shall make any and all records and data available to AT&T or AT&T's auditors on a reasonable basis. AT&T shall bear the cost of said audit. Any information provided by Fast Phones for purposes of such audit shall be deemed Confidential Information pursuant to the General Terms and Conditions.

4.2 Subject to Exhibit A hereto, resold services can only be used in the same manner as specified in AT&T's Tariffs. Resold services are subject to the same terms and conditions as are specified for such services when furnished to an individual customer of AT&T in the appropriate section of AT&T's Tariffs. Specific tariff

features (e.g., a usage allowance per month) shall not be aggregated across multiple resold services.

4.3 If Fast Phones cancels an order for resold services, any costs incurred by AT&T in conjunction with provisioning of such order will be recovered in accordance with AT&T's GSST and Private Line Services Tariffs.

4.4 Service Jointly Provisioned with an Independent Company or CLEC

4.4.1 AT&T will in some instances provision resold services in accordance with AT&T's GSST and Private Line Tariffs jointly with an Independent Company (ICO) or other CLEC.

4.4.2 When Fast Phones assumes responsibility for such service, all terms and conditions defined in the Tariff will apply for services provided within the AT&T service area only.

4.4.3 Service terminating in an ICO or other CLEC area will be provisioned and billed by the ICO or other CLEC directly to Fast Phones.

4.4.4 Fast Phones must establish a billing arrangement with the ICO or other CLEC prior to assuming a customer account where such circumstances apply.

4.4.5 Specific guidelines regarding such services are available on the AT&T Interconnection Web site.

5. Maintenance of Services

5.1 Services resold pursuant to this Attachment and AT&T's GSST and Private Line Service Tariff and facilities and equipment provided by AT&T shall be maintained by AT&T.

5.2 Fast Phones or its customers may not rearrange, move, disconnect, remove or attempt to repair any facilities owned by AT&T except with the written consent of AT&T.

5.3 Fast Phones accepts responsibility to notify AT&T of situations that arise that may result in a service problem.

5.4 Fast Phones will contact the appropriate repair centers in accordance with procedures established by AT&T.

5.5 For all repair requests, Fast Phones shall adhere to AT&T's prescreening guidelines prior to referring the trouble to AT&T.

5.6 AT&T reserves the right to contact Fast Phones's customers, if deemed necessary, for maintenance purposes.

6. Discontinuance of Service

6.1 The procedures for discontinuing service to a customer are as follows:

6.1.1 AT&T will deny service to Fast Phones's customer on behalf of, and at the request of, Fast Phones. Upon restoration of the customer's service, restoral charges will apply and will be the responsibility of Fast Phones.

6.1.2 At the request of Fast Phones, AT&T will disconnect a Fast Phones customer.

6.1.3 All requests by Fast Phones for denial or disconnection of a customer for nonpayment must be in writing.

6.1.4 Fast Phones will be made solely responsible for notifying the customer of the proposed disconnection of the service.

6.1.5 AT&T will continue to process calls made to the Annoyance Call Center and will advise Fast Phones when it is determined that annoyance calls are originated from one of its customer's locations. AT&T shall be indemnified, defended and held harmless by Fast Phones and/or the customer against any claim, loss or damage arising from providing this information to Fast Phones. It is the responsibility of Fast Phones to take the corrective action necessary with its customer who make annoying calls. (Failure to do so will result in AT&T's disconnecting the customer's service.)

7. White Pages Listings

7.1 AT&T shall provide Fast Phones and its end users access to white pages directory listings under the following terms:

7.1.1 Listings. Fast Phones shall provide all new, changed and deleted listings on a timely basis and AT&T or its agent will include Fast Phones residential and business customer listings in the appropriate White Pages (residential and business) or alphabetical directories in the geographic areas covered by this Agreement. Directory listings will make no distinction between Fast Phones and AT&T customers. Fast Phones shall provide listing information in accordance with the procedures set forth in The AT&T Business Rules for Local Ordering found at AT&T's Interconnection Services Web site.

7.1.2 Unlisted/Non-Published Customers. Fast Phones will be required to provide to AT&T the names, addresses and telephone numbers of all Fast Phones customers who wish to be omitted from directories. Unlisted/Non-Published listings will be subject to the rates as set forth in AT&T's GSST and shall not be subject to the wholesale discount.

7.1.3 Inclusion of Fast Phones Customers in Directory Assistance Database. AT&T will include and maintain Fast Phones customer listings inAT&T's Directory Assistance databases. Fast Phones shall provide such Directory Assistance listings to AT&T at no charge.

7.1.4 Listing Information Confidentiality. AT&T will afford Fast Phones's directory listing information the same level of confidentiality that AT&T affords its own directory listing information.

7.1.5 Additional and Designer Listings. Additional and designer listings will be offered by AT&T at tariffed rates as set forth in AT&T's GSST and shall not be subject to the wholesale discount.

7.1.6 Rates. So long as Fast Phones provides listing information to AT&T as set forth in Section 7.1.2 above, AT&T shall provide to Fast Phones one (1) basic White Pages directory listing per Fast Phones customer at no charge other than the manual service order charge or the electronic service order charge, as appropriate,

as described in Attachment 6.

7.2 Directories. AT&T or its agent shall make available White Pages directories to Fast Phones customer at no charge or as specified in a separate agreement between Fast Phones and AT&T's agent.

7.3 Procedures for submitting Fast Phones Subscriber Listing Information (SLI) are found in The AT&T Business Rules for Local Ordering found at AT&T's Interconnection Services Web site.

7.3.1 Fast Phones authorizes AT&T to release all Fast Phones SLI provided to AT&T by Fast Phones to qualifying third parties pursuant to either a license agreement or AT&T's Directory Publishers Database Service (DPDS) in AT&T's GSST. Such Fast Phones SLI shall be intermingled with AT&T's own customer listings and listings of any other CLEC that has authorized a similar release of SLI.

7.3.2 No compensation shall be paid to Fast Phones for AT&T's receipt of Fast Phones's SLI, or for the subsequent release to third parties of such SLI. In addition, to the extent AT&T incurs costs to modify its systems to enable the release of Fast Phones's SLI, or costs on an ongoing basis to administer the release of Fast Phones's SLI, Fast Phones shall pay to AT&T its proportionate share of the reasonable costs associated therewith. At any time that costs may be incurred to administer the release of Fast Phones's SLI, Fast Phones will be notified. If Fast Phones does not wish to pay its proportionate share of these reasonable costs, Fast Phones may instruct AT&T that it does not wish to release its SLI to independent publishers, and Fast Phones shall amend this Agreement accordingly. Fast Phones will be liable for all costs incurred until the effective date of the amendment.

7.3.3 Neither AT&T nor any agent shall be liable for the content or accuracy of any SLI provided by Fast Phones under this Agreement. Fast Phones shall indemnify, except to the extent caused by AT&T's gross negligence or willful misconduct, hold harmless and defend AT&T and its agents from and against any damages, losses, liabilities, demands, claims, suits, judgments, costs and expenses (including but not limited to reasonable attorneys' fees and expenses) arising from AT&T's Tariff obligations or otherwise and resulting from or arising out of any third party's claim of inaccurate Fast Phones listings or use of the SLI provided pursuant to this Agreement. AT&T may forward to Fast Phones any complaints received by AT&T relating to the accuracy or quality of Fast Phones listings.

7.3.4 Listings and subsequent updates will be released consistent with AT&T system changes and/or update scheduling requirements.

8. Operator Services (Operator Call Processing and Directory Assistance)

8.1 Operator Call Processing (OCP) provides: (1) operator handling for call completion (for example, collect, third number billing, and manual calling-card calls); (2) operator or automated assistance for billing after the customer has dialed the called number (for example, calling card calls); and (3) special services including but not limited to Busy Line Verification and Emergency Line Interrupt (ELI), Emergency Agency Call and operator-assisted Directory Assistance (DA).

8.2 Upon request for AT&T OCP, AT&T shall:

8.2.1 Process 0+ and 0- dialed local calls.

8.2.2 Process 0+ and 0- intraLATA toll calls.

8.2.3 Process calls that are billed to Fast Phones customer's calling card that can be validated by AT&T.

8.2.4 Process person-to-person calls.

8.2.5 Process collect calls.

8.2.6 Provide the capability for callers to bill a third party and shall also process such calls.

8.2.7 Process station-to-station calls.

8.2.8 Process Busy Line Verify and ELI requests.

8.2.9 Process emergency call trace originated by PSAP.

8.2.10 Process operator-assisted DA calls.

8.2.11 Adhere to equal access requirements, providing Fast Phones local customer the same IXC access that AT&T provides its own operator service (OS).

8.2.12 Exercise at least the same level of fraud control in providing OS to Fast Phones that AT&T provides for its own OS.

8.2.13 Perform Billed Number Screening when handling Collect, Person-to-Person, and Billed-To-Third-Party calls.

8.2.14 Direct customer account and other similar inquiries to the customer service center designated by Fast Phones.

8.3 Upon Fast Phones's request AT&T shall provide call records to Fast Phones in accordance with Optional Daily Usage File (ODUF) standards.

8.4 The interface requirements shall conform to the interface specifications for the platform used to provide OS as long as the interface conforms to industry standards.

8.5 <u>DA Service</u>

8.5.1 DA Service provides local and non-local customer telephone number listings with the option to complete the call at the caller's direction separate and distinct from local switching.

8.5.2 DA Service shall provide up to two (2) listing requests per call, if available and if requested by Fast Phones's customer. AT&T shall provide caller-optional DA call completion service at rates set forth in AT&T's GSST to one of the provided listings.

8.6 <u>DA Service Updates.</u> AT&T shall update customer listings changes daily. These changes include:

8.6.1 New customer connections;

8.6.2 Customer disconnections;

8.6.3 Customer address changes; and

8.6.4 Non-listed and non-published numbers for use in emergencies.

9. Branding for Wholesale OCP and DA

9.1 AT&T's branding feature provides a definable announcement to Fast Phones's customers using AT&T's DA/OCP prior to placing such customers in queue or connecting them to an available operator or automated operator system. This feature allows Fast Phones to have its calls custom branded with Fast Phones's name on whose behalf AT&T is providing DA and/or OCP. Rates for the branding features are set forth in Exhibit D.

9.2 AT&T offers three (3) branding options to Fast Phones when orderingAT&T's DA and OCP: AT&TBranding, Unbranding and Custom Branding.

9.3 Fast Phones's order for Custom Branding is considered firm ten (10) business days after AT&T's receipt of the order. Fast Phones may cancel its order more than ten (10) business days after AT&T's receipt of the order. Fast Phones shall notify AT&T in writing and shall pay all charges per the order. For branding and unbranding via Originating Line Number Screening (OLNS), Fast Phones must contact its Local Contract Manager to initiate the order via the OLNS Branding Order form.

9.4 <u>Branding via OLNS</u>

9.4.1 AT&T Branding, Unbranding and Custom Branding are also available for DA, OCP or both via OLNS software. When utilizing this method of Unbranding or Custom Branding, Fast Phones shall not be required to purchase dedicated trunking.

9.4.2 AT&T Branding is the default branding offering.

9.4.3 For AT&T to provide Unbranding or Custom Branding via OLNS software for OCP or for DA, Fast Phones must have its OCN(s) and telephone numbers reside in AT&T's Line Information Database (LIDB). To implement Unbranding and Custom Branding via OLNS software, Fast Phones must submit a manual order form which requires, among other things, Fast Phones's OCN and a forecast, pursuant to the appropriate AT&T form provided, for the traffic volume anticipated for each AT&T Traffic Operator Position System (TOPS) during the peak busy hour. Fast Phones shall provide updates to such forecast on a quarterly basis and at any time such forecasted traffic volumes are expected to change significantly. Upon Fast Phones's purchase of Unbranding or Custom Branding using OLNS software for any particular TOPS, all Fast Phones customers served by that TOPS will receive the Unbranded "no announcement" or the Custom Branded announcement.

10. LIDB

10.1 AT&T LIDB stores current information on working telephone numbers and billing account numbers.

10.2 Where Fast Phones is purchasing Resale services AT&T shall utilize AT&T's service order generated from Fast Phones LSR's to populate LIDB with Fast Phones's customer information. AT&T provides access to information in its LIDB, including Fast Phones customer information, to its LIDB customers via queries to LIDB.

10.2.1 When necessary for fraud control measures, AT&T may perform additions, updates and deletions of Fast Phones data to the LIDB (e.g., calling card deactivation).

10.2.2 Fast Phones will not be charged a fee for LIDB storage services provided by AT&T to Fast Phones pursuant to this Attachment.

10.3 Responsibilities of the Parties

10.3.1 AT&T will administer the data provided by Fast Phones pursuant to this Agreement in the same manner as AT&T administers its own data.

10.3.2 Fast Phones is responsible for completeness and accuracy of the data being provided to AT&T.

10.3.3 AT&T shall not be responsible to Fast Phones for any lost revenue which may result from AT&T's administration of the LIDB pursuant to its established practices and procedures as they exist and as they may be changed by AT&T in its sole discretion from time to time.

11. Revenue Accounting Office (RAO) Hosting

11.2 RAO Hosting is not required for resale in the AT&T Southeast Region 9-State.

12. Optional Daily Usage File (ODUF)

12.1 The ODUF Agreement with terms and conditions is included in this Attachment as Exhibit B. Rates for ODUF are as set forth in Exhibit D.

12.2 AT&T will provide ODUF service upon written request.

13. Enhanced Optional Daily Usage File (EODUF)

13.1 The EODUF service Agreement with terms and conditions is included in this Attachment as Exhibit C. Rates for EODUF are as set forth in Exhibit D.

13.2 AT&T will provide EODUF service upon written request.

EXCLUSIONS AND LIMITATIONS ON SERVICES AVAILABLE FOR RESALE (Note 4)

	Type of Service	AL		FL		GA		KY		LA		MS		NC		SC		TN	
		Resale	Discount	Resale	Discount	Resale	Discount	Resale	Discount	Resale	Discount	Resale	Discount	Resale	Discount	Resale	Discount	Resale	Discount
1	Grandfathered Services (Note 1)	Yes	Yes	Yes	Yes	Yes	Yes	Yes	Yes	Yes	Yes	Yes	Yes	Yes	Yes	Yes	Yes	Yes	Yes
2	Promotions - > 90 Days(Note 2 &3)	Yes	Yes	Yes	Yes	Yes	Yes	Yes	Yes	Yes	Yes	Yes	Yes	Yes	Yes	Yes	Yes	Yes	Yes
3	Promotions - < 90 Days (Note 2 & 3)	Yes	No	No	No	Yes	No	Yes	No	Yes	No	Yes	No	Yes	No	No	No	No	No
4	Lifeline/Link Up Services	Yes	Yes	Yes	Yes	Yes	Yes	Yes	Yes	Yes	Yes	Yes	Yes	Yes	Yes	Yes	Yes	Yes	Yes
5	911/E911 Services	Yes	Yes	Yes	Yes	Yes	Yes	Yes	Yes	No	No	Yes	Yes	Yes	Yes	Yes	Yes	Yes	Yes
6	N11 Services (Note 1)	Yes	Yes	Yes	Yes	Yes	Yes	No	No	No	No	Yes	Yes	Yes	Yes	No	No	Yes	Yes
7	MemoryCall® Service	Yes	No	Yes	No	Yes	No	Yes	No	Yes	No	Yes	No	Yes	No	Yes	No	Yes	No
8	Mobile Services	Yes	No	Yes	No	Yes	No	Yes	No	Yes	No	Yes	No	Yes	No	Yes	No	Yes	No
9	Federal Subscriber Line Charges	Yes	No	Yes	No	Yes	No	Yes	No	Yes	No	Yes	No	Yes	No	Yes	No	Yes	No
10	Nonrecurring Charges	Yes	Yes	Yes	Yes	Yes	Yes	Yes	Yes	Yes	Yes	Yes	Yes	Yes	Yes	Yes	Yes	Yes	No
11	EUCL Charge	Yes	No	Yes	No	Yes	No	Yes	No	Yes	No	Yes	No	Yes	No	Yes	No	Yes	No
12	Public Telephone Access Svc(PTAS)	Yes	Yes	Yes	Yes	Yes	Yes	Yes	Yes	Yes	Yes	Yes	Yes	Yes	Yes	Yes	No	Yes	Yes
13	Inside Wire Maint Service Plan	Yes	No	Yes	No	Yes	No	Yes	No	Yes	No	Yes	No	Yes	No	Yes	No	Yes	No

	Applicable Notes:
1.	**Grandfathered services** can be resold only to existing subscribers of the grandfathered service.
2.	Where available for resale, **promotions** will be made available only to customers who would have qualified for the promotion had it been provided by AT&T directly. Promotions, if any, which are not required to be resold under applicable state or federal law or regulation may not be available.
3.	Promotions shall be available only for the term set forth in the applicable tariff or other promotion documentation.
4.	Some of AT&T's local exchange and toll Telecommunications Services are not available in certain central offices and areas.

Optional Daily Usage File

1. Upon written request from Fast Phones, AT&T will provide the ODUF service to Fast Phones pursuant to the terms and conditions set forth in this section.

2. Fast Phones shall furnish all relevant information required by AT&T for the provision of the ODUF.

3. The ODUF feed provides Fast Phones messages that were carried over the AT&T network and processed by AT&T for Fast Phones.

4. Charges for ODUF will appear on Fast Phones's monthly bills for the previous month's usage in arrears. The charges are as set forth in Exhibit D.

5. The ODUF feed will contain both rated and unrated messages. All messages will be in the standard Alliance for Telecommunications Industry Solutions (ATIS) Exchange Message Interface (EMI) record format.

6. ODUF Specifications

6.1 ODUF Message to be Transmitted

6.1.1 The following messages recorded by AT&T will be transmitted to Fast Phones:

6.1.1.1 Message recording for per use/per activation type services (examples: Three Way Calling, Verify, Interrupt, Call Return, etc.);

6.1.1.2 Measured local calls;

6.1.1.3 Directory Assistance messages;

6.1.1.4 IntraLATA Toll;

6.1.1.5 WATS and 800 Service;

6.1.1.6 N11;

6.1.1.7 Information Service Provider Messages;

6.1.1.8 OS Messages;

6.1.1.9 OS Message Attempted Calls;

6.1.1.10 Credit/Cancel Records; and

6.1.1.11 Usage for Voice Mail Message Service.

6.1.2 Rated Incollects (messages AT&T receives from other revenue accounting offices) appear on ODUF. Rated Incollects will be intermingled with AT&T recorded rated and unrated usage. Rated Incollects will not be packed separately.

6.1.3 AT&T will perform duplicate record checks on records processed to ODUF. Any duplicate messages detected will be deleted and not sent to Fast Phones.

6.1.4 In the event that Fast Phones detects a duplicate on ODUF they receive from AT&T, Fast Phones will drop the duplicate message and will not return the duplicate to AT&T.

6.2 ODUF Physical File Characteristics

6.2.1 ODUF will be distributed to Fast Phones via Secure File Transfer Protocol (FTP). The ODUF feed will be a variable block format. The data on the ODUF feed will be in a non-compacted EMI format (one hundred seventy-five (175) byte format plus modules). It will be created on a daily basis Monday through Friday except holidays. Details such as dataset name and delivery schedule will be addressed during negotiations of the distribution medium. There will be a maximum of one (1) dataset per workday per OCN. If AT&T determines the Secure FTP Mailbox is nearing capacity levels, AT&T may move the customer to CONNECT:Direct file delivery.

6.2.2 If the customer is moved, CONNECT:Direct data circuits (private line or dial-up) will be required between AT&T and Fast Phones for the purpose of data transmission. Where a dedicated line is required, Fast Phones will be responsible for ordering the circuit, overseeing its installation and coordinating the installation with AT&T. Fast Phones will also be responsible for any charges associated with this line. Equipment required on the AT&T end to attach the line to the mainframe computer and to transmit messages successfully on an ongoing basis will be negotiated on an individual case basis. Any costs incurred for such equipment will be Fast Phones's responsibility. Where a dial-up facility is required, dial circuits will be installed in the AT&T data center by AT&T and the associated charges assessed to Fast Phones. Additionally, all message toll charges associated with the use of the dial circuit by Fast Phones will be the responsibility of Fast Phones. Associated equipment on the AT&T end, including a modem, will be negotiated on an individual case basis between the Parties. All equipment, including modems and software, that is required on Fast Phones's end for the purpose of data transmission will be the responsibility of Fast Phones.

6.2.3 If Fast Phones utilizes FTP for data file transmission, purchase of the FTP software will be the responsibility of Fast Phones.

6.3 ODUF Packing Specifications

6.3.1 The data will be packed using ATIS EMI records. A pack will contain a minimum of one (1) message record or a maximum of ninety-nine thousand nine hundred and ninety-nine (99,999) message records plus a pack header record and a pack trailer record. One transmission can contain a maximum of ninety-nine (99) packs and a minimum of one (1) pack.

6.3.2 The OCN, From RAO, and Invoice Number will control the invoice sequencing. The From RAO will be used to identify to Fast Phones which AT&T RAO is sending the message. AT&T and Fast Phones will use the invoice sequencing to control data exchange. AT&T will be notified of sequence failures identified by Fast Phones and resend the data as appropriate.

6.4 ODUF Pack Rejection

6.4.1 Fast Phones will notify AT&T within one (1) business day of rejected packs (via the mutually agreed medium). Packs could be rejected because of pack sequencing discrepancies or a critical edit failure on the Pack Header or Pack

Trailer records (e.g., out-of-balance condition on grand totals, invalid data populated). Standard ATIS EMI error codes will be used. Fast Phones will not be required to return the actual rejected data to AT&T. Rejected packs will be corrected and retransmitted to Fast Phones by AT&T.

6.5 ODUF Control Data

6.5.1 Fast Phones will send one confirmation record per pack that is received from AT&T. This confirmation record will indicate Fast Phones's receipt of the pack and the acceptance or rejection of the pack. Pack Status Code(s) will be populated using standard ATIS EMI error codes for packs that were rejected by Fast Phones for reasons stated in the above section.

6.6 ODUF Testing

6.6.1 Upon request from Fast Phones, AT&T shall send ODUF test files to Fast Phones. The Parties agree to review and discuss the ODUF file content and/or format. For testing of usage results, AT&T shall request that Fast Phones set up a production (live) file. The live test may consist of Fast Phones's employees making test calls for the types of services Fast Phones requests on ODUF. These test calls are logged by Fast Phones, and the logs are provided to AT&T. These logs will be used to verify the files. Testing will be completed within thirty (30) days from the date on which the initial test file was sent.

Enhanced Optional Daily Usage File

1. Upon written request from Fast Phones, AT&T will provide the EODUF service to Fast Phones pursuant to the terms and conditions set forth in this section. EODUF will only be sent to existing ODUF subscribers who request the EODUF option.

2. Fast Phones shall furnish all relevant information required by AT&T for the provision of the EODUF.

3. The EODUF will provide usage data for local calls originating from resold Flat Rate Business and Residential Lines.

4. Charges for EODUF will appear on Fast Phones's monthly bills for the previous month's usage in arrears. The charges are as set forth in Exhibit D.

5. All messages will be in the standard ATIS EMI record format.

6. Messages that error in the billing system of Fast Phones will be the responsibility of Fast Phones. If, however, Fast Phones should encounter significant volumes of errored messages that prevent processing by Fast Phones within its systems, AT&T will work with Fast Phones to determine the source of the errors and the appropriate resolution.

7. EODUF Specifications

7.1 EODUF Usage To Be Transmitted

7.1.1 The following messages recorded by AT&T will be transmitted to Fast Phones:

7.1.1.1 Customer usage data for flat rated local calls originating from Fast Phones's customer lines (1FB or 1FR). The EODUF record for flat rate messages will include:

7.1.1.1.1 Date of Call

7.1.1.1.2 From Number

7.1.1.1.3 To Number

7.1.1.1.4 Connect Time

7.1.1.1.5 Conversation Time

7.1.1.1.6 Method of Recording

7.1.1.1.7 From RAO

7.1.1.1.8 Rate Class

7.1.1.1.9 Message Type

7.1.1.1.10 Billing Indicators

7.1.1.1.11 Bill to Number

7.1.2 AT&T will perform duplicate record checks on EODUF records processed to ODUF. Any duplicate messages detected will be deleted and not sent to Fast Phones.

7.1.3 In the event that Fast Phones detects a duplicate on EODUF they receive from AT&T, Fast Phones will drop the duplicate message and will not return the duplicate to AT&T.

7.2 EODUF Physical File Characteristics

7.2.1 EODUF feed will be distributed to Fast Phones via FTP. The EODUF messages will be intermingled among Fast Phones's ODUF messages. The EODUF will be a variable block format. The data on the EODUF will be in a non-compacted EMI format (one hundred seventy-five (175) byte format plus modules). It will be created on a daily basis Monday through Friday except holiday. If AT&T determines the Secure FTP mailbox is nearing capacity levels, AT&T may move the customer to CONNECT:Direct file delivery.

7.2.2 Data circuits (private line or dial-up) may be required between AT&T and Fast Phones for the purpose of data transmission. Where a dedicated line is required, Fast Phones will be responsible for ordering the circuit, overseeing its installation and coordinating the installation with AT&T. Fast Phones will also be responsible for any charges associated with this line. Equipment required on the AT&T end to attach the line to the mainframe computer and to transmit successfully ongoing will be negotiated on an individual case basis. Where a dial-up facility is required, dial circuits will be installed in the AT&T data center by AT&T and the associated charges assessed to Fast Phones. Additionally, all message toll charges associated with the use of the dial circuit by Fast Phones will be the responsibility of Fast Phones. Associated equipment on the AT&T end, including a modem, will be negotiated on an individual case basis between the Parties. All equipment, including modems and software, that is required on Fast Phones's end for the purpose of data transmission will be the responsibility of Fast Phones.

7.2.3 If Fast Phones utilizes FTP for data file transmission, purchase of the FTP software will be the responsibility of Fast Phones.

7.3 EODUF Packing Specifications

7.3.1 The data will be packed using ATIS EMI records. A pack will contain a minimum of one (1) message record or a maximum of ninety-nine thousand nine hundred and ninety-nine (99,999) message records plus a pack header record and a pack trailer record. One transmission can contain a maximum of ninety-nine (99) packs and a minimum of one (1) pack.

7.3.2 The OCN, From RAO, and Invoice Number will control the invoice sequencing. The From RAO will be used to identify to Fast Phones which AT&T RAO is sending the message. AT&T and Fast Phones will use the invoice sequencing to control data exchange. AT&T will be notified of sequence failures identified by Fast Phones and resend the data as appropriate.

RESALE DISCOUNTS & RATES - South Carolina

Att: 1 Exh: D

CATEGORY	RATE ELEMENTS	Interim	Zone	BCS	USOC	RATES($)					Svc Order Submitted Elec per LSR	Svc Order Submitted Manually per LSR	Incremental Charge - Manual Svc Order vs. Electronic-1st	Incremental Charge - Manual Svc Order vs. Electronic-Add'l	Incremental Charge - Manual Svc Order vs. Electronic-Disc 1st	Incremental Charge - Manual Svc Order vs. Electronic-Disc Add'l
						Rec	Nonrecurring		Nonrecurring Disconnect		OSS Rates($)					
							First	Add'l	First	Add'l	SOMEC	SOMAN	SOMAN	SOMAN	SOMAN	SOMAN
RESALE APPLICABLE DISCOUNTS																
	Residence %					14.80										
	Business %					14.80										
	CSAs %					8.98										
OPERATIONS SUPPORT SYSTEMS (OSS) - "REGIONAL RATES"																
	NOTE: (1) CLEC should contact its contract negotiator if it prefers the "state specific" OSS charges as ordered by the State Commissions. The OSS charges currently contained in this rate exhibit are the AT&T "regional" service ordering charges. CLEC may elect either the state specific Commission ordered rates for the service ordering charges, or CLEC may elect the regional service ordering charge, however, CLEC can not obtain a mixture of the two regardless if CLEC has a interconnection contract established in each of the 9 states.															
	OSS - Electronic Service Order Charge, Per Local Service Request (LSR) - Resale Only				SOMEC		3.50	0.00	3.50	0.00						
	OSS - Manual Service Order Charge, Per Local Service Request (LSR) - Resale Only				SOMAN		19.99	0.00	19.99	0.00						
ODUF/EODUF SERVICES																
	OPTIONAL DAILY USAGE FILE (ODUF)															
	ODUF: Recording, per message					0.0000216										
	ODUF: Message Processing, per message					0.004704										
	ODUF: Message Processing, per Magnetic Tape provisioned					48.87										
	ODUF: Data Transmission (CONNECT:DIRECT), per message					0.00010863										
	ENHANCED OPTIONAL DAILY USAGE FILE (EODUF)															
	EODUF: Message Processing, per message					0.258301										
SELECTIVE CALL ROUTING USING LINE CLASS CODES (SCR-LCC)																
	Selective Routing Per Unique Line Class Code Per Request Per Switch						84.89	84.89	14.14	14.14						
DIRECTORY ASSISTANCE CUSTOM BRANDING ANNOUNCEMENT via OLNS SOFTWARE																
	Recording of DA Custom Branded Announcement						3,000.00	3,000.00								
	Loading of DA Custom Branded Anouncement per Switch per OCN						1,170.00	1,170.00								
DIRECTORY ASSISTANCE UNBRANDING via OLNS SOFTWARE																
	Loading of DA per OCN (1 OCN per Order)						420.00	420.00								
	Loading of DA per Switch per OCN						16.00	16.00								
OPERATOR ASSISTANCE CUSTOM BRANDING ANNOUNCEMENT via OLNS SOFTWARE																
	Recording of Custom Branded OA Announcement						7,000.00	7,000.00								
	Loading of Custom Branded OA Announcement per shelf/NAV per OCN						500.00	500.00								
	Loading of OA Custom Branded Announcement per Switch per OCN						1,170.00	1,170.00								
OPERATOR ASSISTANCE UNBRANDING via OLNS SOFTWARE																
	Loading of OA per OCN (Regional)						1,200.00	1,200.00								

Attachment 2

Network Elements and Other Services

TABLE OF CONTENTS

1 Introduction **3**

2 Loops **10**

3 Line Splitting **33**

4 Unbundled Network Element Combinations **36**

5 Dedicated Transport and Dark Fiber Transport **40**

6 Automatic Location Identification/Data Management System (ALI/DMS) **47**

7 White Pages Listings **50**

Rates ..... **Exhibit A**

Rates ..... **Exhibit B**

ACCESS TO NETWORK ELEMENTS AND OTHER SERVICES

1 Introduction

1.1 Except as set forth in Exhibit 1 hereto, this Attachment sets forth rates, terms and conditions for unbundled network elements (Network Elements) and combinations of Network Elements (Combinations) that AT&T offers to Fast Phones for Fast Phones's provision of Telecommunications Services in accordance with its obligations under Section 251(c)(3) of the Act. Additionally, this Attachment sets forth the rates, terms and conditions for other facilities and services AT&T makes available to Fast Phones (Other Services). Additionally, the provision of a particular Network Element or Other Service may require Fast Phones to purchase other Network Elements or services. In the event of a conflict between this Attachment and any other section or provision of this Agreement, the provisions of this Attachment shall control.

1.2 The rates for Network Elements, Combinations and Other Services are set forth in Exhibits A and B. If no rate is identified in this Agreement, the rate will be as set forth in the applicable AT&T tariff or as negotiated by the Parties upon request by either Party. If Fast Phones purchases service(s) from a tariff, all terms and conditions and rates as set forth in such tariff shall apply. A one-month minimum billing period shall apply to all Network Elements, Combinations and Other Services.

1.3 In some cases, Commissions have ordered AT&T to separate its disconnect costs and its installation costs into two separate nonrecurring charges. Accordingly, unless otherwise noted in this Agreement, the Commission ordered disconnect charges will be applied at the time the disconnect activity is performed by AT&T, regardless of whether or not a disconnect order is issued by Fast Phones. Disconnect charges are set forth in the rate exhibit of this Attachment. Fast Phones may purchase and use Network Elements and Other Services from AT&T in accordance with 47 C.F.R § 51.309.

1.4 The Parties shall comply with the requirements as set forth in the technical references within this Attachment 2.

1.5 Fast Phones shall not obtain a Network Element for the exclusive provision of mobile wireless services or interexchange services.

1.6 <u>Conversion of Wholesale Services to Network Elements or Network Elements to Wholesale Services.</u> Upon request, AT&T shall convert a wholesale service, or group of wholesale services, to the equivalent Network Element or Combination that is available to Fast Phones pursuant to Section 251 of the Act and under this Agreement or convert a Network Element or Combination that is available to Fast Phones pursuant to Section 251 of the Act and under this Agreement to an

equivalent wholesale service or group of wholesale services offered by AT&T (collectively "Conversion"). AT&T shall charge the applicable nonrecurring switch-as-is rates for Conversions to specific Network Elements or Combinations found in Exhibit A. AT&T shall also charge the same nonrecurring switch-as-is rates when converting from Network Elements or Combinations. Any rate change resulting from the Conversion will be effective as of the next billing cycle following AT&T's receipt of a complete and accurate Conversion request from Fast Phones. A Conversion shall be considered termination for purposes of any volume and/or term commitments and/or grandfathered status between Fast Phones and AT&T. Any change from a wholesale service/group of wholesale services to a Network Element/Combination, or from a Network Element/Combination to a wholesale service/group of wholesale services, that requires a physical rearrangement will not be considered to be a Conversion for purposes of this Agreement. AT&T will not require physical rearrangements if the Conversion can be completed through record changes only. Orders for Conversions will be handled in accordance with the guidelines set forth in the Ordering Guidelines and Processes and CLEC Information Packages as referenced in Sections 1.13.1 and 1.13.2 below.

1.7 Except to the extent expressly provided otherwise in this Attachment, in all states, Fast Phones may not maintain unbundled network elements or combinations of unbundled network elements, that are no longer offered pursuant to this Agreement (collectively "Arrangements"). In the event AT&T determines that Fast Phones has in place any Arrangements after the Effective Date of this Agreement, AT&T will identify such Arrangements and provide Fast Phones with thirty (30) days written notice to disconnect or convert such Arrangements. For orders submitted by Fast Phones within such thirty (30) day period, AT&T will charge the applicable switch-as-is charge set forth in Exhibit A. If Fast Phones fails to submit orders to disconnect or convert such Arrangements within such thirty (30) day period, AT&T will transition such circuits to the equivalent tariffed AT&T service(s), and shall charge Fast Phones all applicable disconnect charges as set forth in this Agreement and the full nonrecurring charges for installation of the equivalent tariffed AT&T service as set forth in AT&T's tariffs. For all transitions pursuant to this Section 1.7 that require a physical rearrangement, AT&T shall charge any applicable nonrecurring installation charges. To the extent no tariff equivalent service exists, AT&T shall disconnect such facility or Arrangement. The applicable recurring tariff charge shall apply to each circuit as of the Effective Date of this Agreement.

1.7.1 In addition to the foregoing, for the state of Florida, the applicable recurring tariff charges shall apply to each circuit beginning the day following the thirty (30) day notice period.

1.7.2 Notwithstanding the foregoing, for the state of Georgia, those circuits for which Fast Phones failed to submit a disconnect or conversion order within such thirty

(30) day period and are subsequently transitioned by AT&T pursuant to this Section 1.7.2 shall be subject to the applicable switch-as-is charges set forth in Exhibit A. If an equivalent service is set forth in Exhibit 1, AT&T shall transition to such service. Otherwise, AT&T shall transition to the equivalent tariff service. To the extent no tariff equivalent service exists and no equivalent service is set forth in Exhibit 1, AT&T shall disconnect such facility or Arrangement. The applicable recurring 271 rate, resale or tariffed charge shall apply to each circuit as of March 11, 2006.

1.7.3 Notwithstanding the foregoing, for the state of North Carolina, those circuits for which Fast Phones failed to submit a disconnect or conversion order within such thirty (30) day period and are subsequently transitioned by AT&T pursuant to this Section 1.7.3 shall be subject to applicable switch-as-is charges.

1.7.4 Notwithstanding the foregoing, for the state of Alabama, the written notice provided by AT&T, as described in Section 1.7, must identify by circuit identification number the specific Arrangements to be converted or disconnected. If Fast Phones fails to dispute AT&T's identified Arrangements or fails to submit orders to disconnect or convert such Arrangements within the established thirty (30) day period, AT&T will transition such circuits to the equivalent tariffed AT&T service(s) subject to the Commission-established switch-as-is rate. The full nonrecurring charges for installation of the equivalent tariffed AT&T service as set forth in AT&T's tariffs will not apply to such conversions. However, the applicable recurring tariff charges shall apply to each circuit upon conversion.

1.7.5 Notwithstanding the foregoing, for the state of Louisiana, AT&T will provide Fast Phones with written notice identifying the specific Arrangements which must be converted or disconnected. Fast Phones shall have thirty (30) days from the date of the notice to submit orders to disconnect or convert the Arrangements. Those circuits to be converted to other AT&T services shall be subject to nonrecurring charges associated with that conversion. If Fast Phones disputes AT&T's identification of Arrangements to be disconnected or converted, Fast Phones shall send written notice of its dispute within thirty (30) days of AT&T's notice. AT&T shall not disconnect the disputed Arrangements while the dispute is being resolved. If the Parties are unable to reach a voluntary resolution of the dispute, they may petition the Commission for assistance. If Fast Phones does not dispute AT&T's identification of Arrangements and fails to submit orders to disconnect or convert such Arrangements within the established thirty (30) day period, AT&T will transition such circuits to the equivalent tariffed AT&T services subject to the full nonrecurring charges for installation of the equivalent tariffed AT&T services as set forth in AT&T's tariffs. The applicable recurring tariff charges shall apply to each circuit upon conversion.

1.8 AT&T's Master List of Unimpaired Wire Centers as Approved by State Commissions in its Region (Master List of Unimpaired Wire Centers), located on

the AT&T Interconnection Web site designates those wire centers that, in accordance with state Commission orders, met the FCC's established criteria for non-impairment, as of March 11, 2005, where certain high capacity (DS1 and above) Loops and high capacity Dedicated Transport are no longer available as Network Elements. AT&T's List of Unimpaired Wire Centers in Kentucky and Tennessee (AT&T's List of Unimpaired Wire Centers), also located on the AT&T Interconnection Web site, are those wire centers that AT&T proposed met the FCC's established criteria for non-impairment as of March 11, 2005 but have not yet been approved by these respective Commissions. The Master List of Unimpaired Wire Centers and AT&T's List of Unimpaired Wire Centers shall be subject to modification and/or the addition of wire centers without amendment to this Agreement upon subsequent orders from state Commissions in the respective generic dockets establishing the wire centers that as of March 11, 2005, were unimpaired. Notification of such modification, addition or deletion of wire centers shall be made via AT&T's Carrier Notification process on AT&T's Interconnection Web site. Upon the Effective Date of this Agreement, Fast Phones may not place any new orders for high capacity Dedicated Transport or high capacity Loops, as applicable, in those wire centers listed on the Master List of Unimpaired Wire Centers. In those wire centers set forth on AT&T's List of Unimpaired Wire Centers, Fast Phones may place new orders for high capacity Loops and high capacity Dedicated Transport pursuant to Section 1.8.1 (self-certification) until such wire centers are approved by the Commissions. To the extent Fast Phones placed orders after March 10, 2005 for high capacity Loops or high capacity Dedicated Transport in wire centers designated on the Master List of Unimpaired Wire Centers, as amended as specified above, within thirty (30) days after the Effective Date of this Agreement, or in the case of additions to the Master List of Unimpaired Wire Centers, within thirty (30) days after the notice of such addition, Fast Phones shall submit an LSR(s) or spreadsheet(s), as applicable, identifying those non-compliant circuits to be disconnected or converted to the equivalent AT&T tariffed service or, in the state of Georgia, to the equivalent 271 service set forth in Exhibit 1. AT&T shall bill Fast Phones the difference between the UNE recurring rates for such circuits pursuant to this Agreement and the applicable recurring charges for the equivalent AT&T tariffed service or 271 service in the state of Georgia from the date UNE circuit was installed in the unimpaired wire center to the date the circuit is disconnected or transitioned to the equivalent AT&T tariffed service. If Fast Phones fails to submit an LSR or spreadsheet identifying such de-listed circuits within thirty (30) days as set forth above, AT&T will identify such circuits and convert them to the equivalent AT&T tariffed service, and charge Fast Phones applicable disconnect charges for the UNE circuit and the difference between the UNE recurring rate billed for such circuit and the full non-recurring and recurring charges for the tariffed service from the date the UNE circuit was installed in the unimpaired wire center to the date the circuit is transitioned to the equivalent AT&T tariffed service. To the extent there

is no equivalent AT&T tariffed service for the de-listed UNE circuit, AT&T will disconnect the circuit and bill Fast Phones full disconnect charges.

1.8.1 Prior to submitting an order pursuant to this Agreement for high capacity Dedicated Transport or high capacity Loops, Fast Phones shall undertake a reasonably diligent inquiry to determine whether Fast Phones is entitled to unbundled access to such Network Elements in accordance with the terms of this Agreement. By submitting any such order, Fast Phones self-certifies that to the best of Fast Phones's knowledge, the high capacity Dedicated Transport or high capacity Loop requested is available as a Network Element pursuant to this Agreement. Upon receiving such order, except in wire centers set forth on the Master List of Unimpaired Wire Centers, or AT&T's List of Unimpaired Wire Centers, AT&T shall process the request in reliance upon Fast Phones's self-certification. To the extent AT&T believes that such request does not comply with the terms of this Agreement, AT&T shall seek dispute resolution in accordance with the General Terms and Conditions of this Agreement. In the event such dispute is resolved in AT&T's favor, AT&T shall bill Fast Phones the difference between the rates for such circuits pursuant to this Agreement and the applicable nonrecurring and recurring charges for the equivalent tariffed service from the date of installation to the date the circuit is transitioned to the equivalent tariffed service. Within thirty (30) days following a decision finding in AT&T's favor, Fast Phones shall submit an LSR(s) or spreadsheet(s) identifying those non-compliant circuits to be transitioned to tariffed services or disconnected.

1.8.2 In the event that (1) AT&T designated a wire center as unimpaired as set forth on the Master List of Unimpaired Wire Centers on the AT&T Interconnection Web site, or AT&T's List of Unimpaired Wire Centers, (2) as a result of such designation, Fast Phones converted high capacity Dedicated Transport or high capacity Loops to other services or ordered new services as services other than high capacity Dedicated Transport or high capacity Loop Network Elements subsequent to March 10, 2005, (3) Fast Phones otherwise would have been entitled to high capacity Dedicated Transport or high capacity Loops in such wire center at the time such alternative services were provisioned, and (4) AT&T acknowledges, or a state or federal regulatory body with authority determines, that, at the time AT&T designated such wire center as unimpaired, such wire center did not meet the FCC's unimpairment criteria, then upon request of Fast Phones consistent with the applicable ordering processes as reflected in the Guides located on AT&T's Interconnection Web site no later than sixty (60) days after AT&T acknowledges or the state or federal regulatory body issues an order making such a finding, AT&T shall transition to high capacity Dedicated Transport or high capacity Loops, as appropriate, any alternative services in such wire center that were established after such wire center was designated as unimpaired. In such instances, AT&T shall refund to Fast Phones the difference between the rate paid by Fast Phones for such services and the applicable rates set forth herein for high

capacity Dedicated Transport or high capacity Loops, including but not limited to any charges associated with the Conversion (as defined in Section 1.6 above) from high capacity Dedicated Transport or high capacity Loops to other wholesale services, if applicable, for the period from the later of March 11, 2005, or the date the circuit became a wholesale service to the date the circuit is transitioned to high capacity Dedicated Transport or high capacity Loop as described in this Section.

1.9 Fast Phones may utilize Network Elements and Other Services to provide services in accordance with this Agreement, as long as such services are consistent with industry standards and applicable AT&T Technical References.

1.10 AT&T will perform Routine Network Modifications (RNM) in accordance with FCC 47 C.F.R. § 51.319 (a)(7) and (e)(4) for Loops and Dedicated Transport provided under this Attachment. If AT&T has anticipated such RNM and performs them during normal operations and has recovered the costs for performing such modifications through the rates set forth in Exhibit A, then AT&T shall perform such RNM at no additional charge. RNM shall be performed within the intervals established for the Network Element and subject to the service quality measurements and associated remedies set forth in Attachment 9 to the extent such RNM were anticipated in the setting of such intervals. If AT&T has not anticipated a requested network modification as being a RNM and has not recovered the costs of such RNM in the rates set forth in Exhibit A, then such request will be handled as a project on an individual case basis. AT&T will provide a price quote for the request and, upon receipt of payment from Fast Phones, AT&T shall perform the RNM.

1.10.1 Notwithstanding the foregoing, for the states of Alabama and Georgia, AT&T shall perform RNM at no additional charge, provided however, for any RNM performed by AT&T for which costs are not recovered through existing rates, AT&T can seek resolution from the Commission.

1.11 <u>Commingling of Services</u>

1.11.1 Commingling means the connecting, attaching, or otherwise linking of a Network Element, or a Combination, to one or more Telecommunications Services or facilities that Fast Phones has obtained at wholesale from AT&T, or the combining of a Network Element or Combination with one or more such wholesale Telecommunications Services or facilities. Fast Phones must comply with all rates, terms or conditions applicable to such wholesale Telecommunications Services or facilities.

1.11.2 Subject to the limitations set forth elsewhere in this Attachment, AT&T shall not deny access to a Network Element or a Combination on the grounds that one or more of the elements: (1) is connected to, attached to, linked to, or combined with such a facility or service obtained from AT&T; or (2) shares part of AT&T's

network with access services or inputs for mobile wireless services and/or interexchange services.

1.11.3 Except for the state of Georgia, notwithstanding any other provision of this Agreement, AT&T shall not be obligated to commingle or combine, pursuant to this Agreement, Network Elements or Combinations with any service, network element or other offering that it is obligated to make available pursuant only to Section 271 of the Act.

1.11.4 Unless otherwise agreed to by the Parties, the Network Element portion of a commingled circuit will be billed at the rates set forth in this Agreement and the remainder of the circuit or service will be billed in accordance with AT&T's tariffed rates, rates set forth in a separate agreement between the Parties, or in the state of Georgia only, in accordance with the rates set forth in Exhibit 1 of this Attachment, as applicable.

1.11.5 When multiplexing equipment is attached to a commingled circuit, the multiplexing equipment will be billed from the same agreement or tariff as the higher bandwidth circuit. Central Office Channel Interfaces (COCI) will be billed from the same agreement or tariff as the lower bandwidth circuit.

1.11.6 The Commingling process and requirements will be handled in accordance with the guidelines set forth in the Ordering Guidelines and Processes and CLEC Information Packages as referenced in Sections 1.13.1 and 1.13.2 below.

1.12 Terms and conditions for order cancellation charges and Service Date Advancement Charges will apply in accordance with Attachment 6 and are incorporated herein by this reference. The charges shall be as set forth in Exhibit A.

1.13 <u>Ordering Guidelines and Processes</u>

1.13.1 For information regarding Ordering Guidelines and Processes for various Network Elements, Combinations and Other Services, Fast Phones should refer to the "Guides" section of the AT&T Interconnection Web site.

1.13.2 Additional information may also be found in the individual CLEC Information Packages, located at the "CLEC UNE Products" on AT&T's Interconnection Web site.

1.13.3 The provisioning of Network Elements, Combinations and Other Services to Fast Phones's Collocation Space will require cross-connections within the central office to connect the Network Element, Combinations or Other Services to the demarcation point associated with Fast Phones's Collocation Space. These cross-connects are separate components that are not considered a part of the Network

Element, Combinations or Other Services and, thus, have a separate charge pursuant to Attachment 4.

1.13.4 Testing/Trouble Reporting

1.13.4.1 Fast Phones will be responsible for testing and isolating troubles on Network Elements. Fast Phones must test and isolate trouble to the AT&T network before reporting the trouble to the Network Elements Customer Wholesale Interconnection Network Services (CWINS) Center. Upon request from AT&T at the time of the trouble report, Fast Phones will be required to provide the results of the Fast Phones test which indicate a problem on the AT&T network.

1.13.4.2 Once Fast Phones has isolated a trouble to the AT&T network, and has issued a trouble report to AT&T, AT&T will take the actions necessary to repair the Network Element when trouble is found. AT&T will repair its network facilities to its wholesale customers in the same time frames that AT&T repairs similar services to its retail customers.

1.13.4.3 If Fast Phones reports a trouble on an AT&T Network Element and no trouble is found in AT&T's network, AT&T will charge Fast Phones a Maintenance of Service Charge for any dispatching and testing (both inside and outside the CO) required by AT&T in order to confirm the Network Element's working status. AT&T will assess the applicable Maintenance of Service rates from BellSouth's FCC No.1 Tariff, Section 13.3.1.

1.13.4.4 In the event AT&T must dispatch to the customer's location more than once due to incorrect or incomplete information provided by Fast Phones (e.g., incomplete address, incorrect contact name/number, etc.), AT&T will bill Fast Phones for each additional dispatch required to repair the Network Element due to the incorrect/incomplete information provided. AT&T will assess the applicable Maintenance of Service rates from BellSouth's FCC No.1 Tariff, Section 13.3.1.

2 Loops

2.1 General. The local loop Network Element is defined as a transmission facility that AT&T provides pursuant to this Attachment between a distribution frame (or its equivalent) in AT&T's central office and the loop demarcation point at a customer premises (Loop). Facilities that do not terminate at a demarcation point at a customer premises, including, by way of example, but not limited to, facilities that terminate to another carrier's switch or premises, a cell site, Mobile Switching Center or base station, do not constitute local Loops. The Loop Network Element includes all features, functions, and capabilities of the transmission facilities, including the network interface device, and attached electronics (except those used for the provision of advanced services, such as Digital Subscriber Line Access Multiplexers (DSLAMs)), optronics and intermediate devices (including repeaters

and load coils) used to establish the transmission path to the customer's premises, including inside wire owned or controlled by AT&T. Fast Phones shall purchase the entire bandwidth of the Loop and, except as required herein or as otherwise agreed to by the Parties, AT&T shall not subdivide the frequency of the Loop.

2.1.1 The Loop does not include any packet switched features, functions or capabilities.

2.1.2 Fiber to the Home (FTTH) loops are local loops consisting entirely of fiber optic cable, whether dark or lit, serving a customer's premises or, in the case of predominantly residential multiple dwelling units (MDUs), a fiber optic cable, whether dark or lit, that extends to the MDU minimum point of entry (MPOE). Fiber to the Curb (FTTC) loops are local loops consisting of fiber optic cable connecting to a copper distribution plant that is not more than five hundred (500) feet from the customer's premises or, in the case of predominantly residential MDUs, not more than five hundred (500) feet from the MDU's MPOE. The fiber optic cable in a FTTC loop must connect to a copper distribution plant at a serving area interface from which every other copper distribution subloop also is not more than five hundred (500) feet from the respective customer's premises.

2.1.2.1 In new build (Greenfield) areas, where AT&T has only deployed FTTH/FTTC facilities, AT&T is under no obligation to provide Loops. FTTH facilities include fiber loops deployed to the MPOE of a MDU that is predominantly residential regardless of the ownership of the inside wiring from the MPOE to each customer in the MDU.

2.1.2.2 In FTTH/FTTC overbuild situations where AT&T also has copper Loops, AT&T will make those copper Loops available to Fast Phones on an unbundled basis, until such time as AT&T chooses to retire those copper Loops using the FCC's network disclosure requirements. In these cases, AT&T will offer a sixty-four (64) kilobits per second (kbps) voice grade channel over its FTTH/FTTC facilities.

2.1.2.3 Notwithstanding the foregoing, in the states of Alabama and Louisiana, AT&T shall make available DS1 and DS3 Loops in any wire center where AT&T is required to provide such Loop facilities. In the states of North Carolina and South Carolina, AT&T shall make available DS1 Loops in any wire center where AT&T is required to provide such Loop facilities.

2.1.2.4 Furthermore, in FTTH/FTTC overbuild areas where AT&T has not yet retired copper facilities, AT&T is not obligated to ensure that such copper Loops in that area are capable of transmitting signals prior to receiving a request for access to such Loops by Fast Phones. If a request is received by AT&T for a copper Loop, and the copper facilities have not yet been retired, AT&T will restore the copper Loop to serviceable condition if technically feasible. Except for the state of Georgia, in these instances of Loop orders in an FTTH/FTTC overbuild area, AT&T's standard Loop provisioning interval will not apply, and the order will be

handled on a project basis by which the Parties will negotiate the applicable provisioning interval. For the state of Georgia, in these instances of Loop orders in an FTTH/FTTC overbuild area, AT&T's standard Loop provisioning interval will apply.

2.1.3 A hybrid Loop is a local Loop, composed of both fiber optic cable, usually in the feeder plant, and copper twisted wire or cable, usually in the distribution plant. AT&T shall provide Fast Phones access to hybrid Loops pursuant to the requirements of 47 C.F.R. § 51.319(a)(2). AT&T is not required to provide access to the packet switched features, functions and capabilities of its hybrid Loops.

2.1.3.1 AT&T shall not engineer the transmission capabilities of its network in a manner, or engage in any policy, practice, or procedure, that disrupts or degrades access to a local Loop or Subloop, including the time division multiplexing-based features, functions and capabilities of a hybrid Loop, for which a requesting telecommunications carrier may obtain or has obtained access pursuant to this Attachment.

2.1.4 <u>DS1 and DS3 Loop Requirements</u>

2.1.4.1 For purposes of this Section 2, a Business Line is defined in 47 C.F.R. § 51.5.

2.1.4.2 For purposes of this Section 2, a "Fiber-Based Collocator" is defined in 47 C.F.R. § 51.5.

2.1.4.3 Notwithstanding anything to the contrary in this Agreement, AT&T shall make available DS1 and DS3 Loops as described in this Agreement, except in any wire center meeting the criteria described below:

2.1.4.3.1 DS1 Loops at any location within the service area of a wire center containing sixty thousand (60,000) or more Business Lines and four (4) or more fiber-based collocators.

2.1.4.3.2 DS3 Loops at any location within the service area of a wire center containing thirty-eight thousand (38,000) or more Business Lines and four (4) or more fiber-based collocators.

2.1.4.4 The Master List of Unimpaired Wire Centers and AT&T's List of Unimpaired Wire Centers as described in Section 1.8 sets forth the list of wire centers meeting the criteria set forth in Sections 2.1.4.3.1 and 2.1.4.3.2 above as of March 11, 2005.

2.1.4.5 Once any wire center exceeds both of the thresholds set forth in Section 2.1.4.3.1 above, no future DS1 Loop unbundling will be required in that wire center.

2.1.4.6 Once any wire center exceeds both of the thresholds set forth in Section 2.1.4.3.2 above, no future DS3 Loop unbundling will be required in that wire center.

2.1.4.7 Modifications and Updates to the Wire Center Lists and Subsequent Transition Periods

2.1.4.7.1 In the event AT&T identifies additional wire centers that meet the criteria set forth in Section 2.1.4.3 above but that were not included in the Master List of Unimpaired Wire Centers and AT&T's List of Unimpaired Wire Centers, AT&T shall include such additional wire centers in a carrier notification letter (CNL). Each such list of additional wire centers shall be considered a "Subsequent Wire Center List". AT&T will follow any notification procedures set forth in applicable Commission orders.

2.1.4.7.2 Fast Phones shall have thirty (30) business days to dispute the additional wire centers listed on AT&T's CNL. Absent such dispute, effective thirty (30) business days after the date of an AT&T CNL providing a Subsequent Wire Center List, AT&T shall not be required to unbundle DS1 and/or DS3 Loops, as applicable, in such additional wire center(s), except pursuant to the self-certification process as set forth in Section 1.8 of this Attachment.

2.1.4.7.2.1 For purposes of Section 2.1.4.7 above, AT&T shall make available DS1 and DS3 Loops that were in service for Fast Phones in a wire center on the Subsequent Wire Center List as of the thirtieth (30th) business day after the date of AT&T's CNL identifying the Subsequent Wire Center List (Subsequent Embedded Base) until one hundred eighty (180) days after the thirtieth (30th) business day from the date of AT&T's CNL identifying the Subsequent Wire Center List (Subsequent Transition Period).

2.1.4.7.2.2 The rates set forth in Exhibit B shall apply to the Subsequent Embedded Base during the Subsequent Transition Period.

2.1.4.7.2.3 No later than one hundred eighty (180) days from AT&T's CNL identifying the Subsequent Wire Center List, Fast Phones shall submit an LSR(s) or spreadsheet(s) as applicable, identifying the Subsequent Embedded Base of circuits to be disconnected or converted to other AT&T services.

2.1.4.7.2.3.1 In the case of disconnection, the applicable disconnect charges set forth in this Agreement shall apply.

2.1.4.7.2.3.2 If Fast Phones fails to submit the LSR(s) or spreadsheet(s) for all of its Subsequent Embedded Base by one hundred eighty (180) days after the date of AT&T's CNL identifying the Subsequent Wire Center List, AT&T will identify Fast Phones's remaining Subsequent Embedded Base, if any, and will transition such circuits to the equivalent tariffed AT&T service(s), or in the case of Georgia, to the

equivalent 271 service(s) set forth in Exhibit 1. In the states of Florida, Mississippi and South Carolina, those circuits identified and transitioned by AT&T shall be subject to the applicable disconnect charges as set forth in this Agreement and the full nonrecurring charges for installation of the equivalent tariffed AT&T service as set forth in AT&T's tariffs. In the states of Alabama, Georgia, and North Carolina, those circuits identified and transitioned by AT&T shall be subject to the applicable switch-as-is rates set forth in Exhibit A of Attachment 2. In the state of Louisiana, those circuits identified and transitioned by AT&T shall be subject to the full nonrecurring charges for installation of the equivalent tariffed AT&T service as set forth in AT&T's tariffs.

2.1.4.7.2.3.3 For Subsequent Embedded Base circuits converted pursuant to Section 2.1.4.7.2.3 above or transitioned pursuant to Section 2.1.4.7.2.3.2 above, the applicable recurring tariff charges shall apply as of the earlier of the date each circuit is converted or transitioned, as applicable, or the first day after the end of the Subsequent Transition Period.

2.1.5 Where facilities are available, AT&T will install Loops in compliance with AT&T's Products and Services Interval Guide available at AT&T's Interconnection Web site. For orders of fifteen (15) or more Loops, the installation and any applicable Order Coordination (OC) as described below will be handled on a project basis, and the intervals will be set by the AT&T project manager for that order. When Loops require a Service Inquiry (SI) prior to issuing the order to determine if facilities are available, the interval for the SI process is separate from the installation interval.

2.1.6 The Loop shall be provided to Fast Phones in accordance with AT&T's TR73600 Unbundled Local Loop Technical Specification and applicable industry standard technical references.

2.1.7 AT&T will only provision, maintain and repair the Loops to the standards that are consistent with the type of Loop ordered.

2.1.7.1 When an AT&T technician is required to be dispatched to provision the Loop, AT&T will tag the Loop with the Circuit ID number and the name of the ordering CLEC. When a dispatch is not required to provision the Loop, AT&T will tag the Loop on the next required visit to the customer's location. If Fast Phones wants to ensure the Loop is tagged during the provisioning process for Loops that may not require a dispatch (e.g., UVL-SL1, UVL-SL2, and UCL-ND), Fast Phones may order Loop Tagging. Rates for Loop Tagging are as set forth in Exhibit A.

2.1.7.2 For voice grade Loop orders (or orders for Loops intended to provide voice grade services), Fast Phones shall have dial-tone available for that Loop forty-eight (48) hours prior to the Loop order completion due date. This applies to all conversions from one provider to another provider as well as Service Rearrangements as set

forth in Section 2.1.12. Where Fast Phones dial-tone is not available on the conversion date the Loop will not be cut over and the Loop order will be returned to Fast Phones for rescheduling.

2.1.8 OC and Order Coordination-Time Specific (OC-TS)

2.1.8.1 OC allows AT&T and Fast Phones to coordinate the installation of the SL2 Loops, Unbundled Digital Loops (UDL) and other Loops where OC may be purchased as an option, to Fast Phones's facilities to limit customer service outage. OC is available when the Loop is provisioned over an existing circuit that is currently providing service to the customer. OC for physical conversions will be scheduled at AT&T's discretion during normal working hours on the committed due date. OC shall be provided in accordance with the chart set forth below.

2.1.8.2 OC-TS allows Fast Phones to order a specific time for OC to take place. AT&T will make commercially reasonable efforts to accommodate Fast Phones's specific conversion time request. However, AT&T reserves the right to negotiate with Fast Phones a conversion time based on load and appointment control when necessary. This OC-TS is a chargeable option for all Loops except Unbundled Copper Loops (UCL) and is billed in addition to the OC charge. Fast Phones may specify a time between 9:00 a.m. and 4:00 p.m. (location time) Monday through Friday (excluding holidays). If Fast Phones specifies a time outside this window, or selects a time or quantity of Loops that requires AT&T technicians to work outside normal work hours, overtime charges will apply in addition to the OC and OC-TS charges. Overtime charges will be applied based on the amount of overtime worked and in accordance with the rates established in AT&T's intrastate Access Services Tariff, Section E13.2, for each state. The OC-TS charges for an order due on the same day at the same location will be applied on a per LSR basis.

2.1.9

	Order Coordination (OC)	Order Coordination – Time Specific (OC-TS)	Test Points	DLR	Charge for Dispatch and Testing if No Trouble Found
SL-1 **(Non-Designed)**	Chargeable Option	Chargeable Option	Not available	Chargeable Option – ordered as Engineering Information Document	Charged for Dispatch inside and outside Central Office
UCL-ND **(Non-Designed)**	Chargeable Option	Not Available	Not Available	Chargeable Option – ordered as Engineering Information Document	Charged for Dispatch inside and outside Central Office
Unbundled Voice Loops - SL-2 (including 2- and 4-wire UVL) (Designed)	Included	Chargeable Option	Included	Included	Charged for Dispatch outside Central Office
Unbundled Digital Loop (Designed)	Included	Chargeable Option	Included (where appropriate)	Included	Charged for Dispatch outside Central Office
Unbundled Copper Loop (Designed)	Chargeable in accordance with Section 2	Not available	Included	Included	Charged for Dispatch outside Central Office
For UVL-SL1 and UCLs, Fast Phones must order and will be billed for both OC and OC-TS if requesting OC-TS.					

2.1.10 <u>CLEC to CLEC Conversions for Unbundled Loops</u>

2.1.10.1 The CLEC to CLEC conversion process for Loops may be used by Fast Phones when converting an existing Loop from another CLEC for the same customer. The Loop type being converted must be included in Fast Phones's Agreement before requesting a conversion.

2.1.10.2 To utilize the CLEC to CLEC conversion process, the Loop being converted must be the same Loop type with no requested changes to the Loop, must serve the same customer location from the same serving wire center, and must not require an outside dispatch to provision.

2.1.10.3 The Loops converted to Fast Phones pursuant to the CLEC to CLEC conversion process shall be provisioned in the same manner and with the same functionality and options as described in this Agreement for the specific Loop type.

2.1.11 Bulk Migration

2.1.11.1 AT&T will make available to Fast Phones a Bulk Migration process pursuant to which Fast Phones may request to migrate port/loop combinations, provisioned pursuant to a separate agreement between the parties, to Loops (UNE-L). The Bulk Migration process may be used if such loop/port combinations are (1) associated with two (2) or more Existing Account Telephone Numbers (EATNs); and (2) located in the same Central Office. The terms and conditions for use of the Bulk Migration process are described in the AT&T CLEC Information Package. The CLEC Information Package is located on AT&T's Interconnection Web site. The rates for the Bulk Migration process shall be the nonrecurring rates associated with the Loop type being requested on the Bulk Migration, as set forth in Exhibit A. Additionally, OSS charges will also apply. Loops connected to Integrated Digital Loop Carrier (IDLC) systems will be migrated pursuant to Section 2.6 below.

2.1.11.2 Should Fast Phones request migration for two (2) or more EATNs containing fifteen (15) or more circuits, Fast Phones must use the Bulk Migration process referenced in 2.1.11.1 above.

2.1.12 Unbundled Loop (DS1 and below) Service Rearrangements

2.1.12.1 The Unbundled Loop Service Rearrangement processes will allow changes to be made to a working Loop facility assignment within the same end-user serving wire center. Service Rearrangements will result in service outages to the customer during the time the Loop is being moved.

2.1.12.2 An Unbundled Loop Service Rearrangement connecting facility change (CFC) allows Fast Phones to change its installed Loop from one working facility assignment to another facility assignment. CFC includes Connecting Facility Assignment (CFA) and Cable ID & Pair changes within same collocation arrangement or from collocation to collocation. CFA changes are allowed within the same multiplexer or from one multiplexer to another multiplexer. For a CFC, the Loop class of service, Loop type and the customer must remain the same.

2.1.12.3 An Unbundled Loop Service Rearrangement connecting facility move (CFM) allows Fast Phones to move the Loop facility assignment from a collocation arrangement to a multiplexer or from a multiplexer to a collocation arrangement. CFMs require a change to the Loop basic class of service. The Loop type and the customer must remain the same.

2.1.12.4 For Unbundled Loop Service Rearrangements, AT&T shall charge the applicable "Service Rearrangement change in Loop facility" rate found in Exhibit A.

2.1.12.5 The Unbundled Loop Service Rearrangement process and requirements will be handled in accordance with the guidelines set forth in the Ordering Guidelines and CLEC Information Packages as referenced in Sections 1.13.1 and 1.13.2 above.

2.1.13 <u>EEL to Loop Retermination</u>

2.1.13.1 Fast Phones may utilize the EEL to Loop Retermination process to disconnect an EEL circuit and reterminate the Loop portion of the former EEL circuit to a collocation arrangement in the end-user's Serving Wire Center (EU SWC).

2.1.13.2 This process is available when the existing Loop portion of the EEL will be re-used and the resulting Loop will be subject to the rates, terms and conditions for that particular Loop as set forth in this Attachment. This process will apply only to EELs that include as a part of its combination a DS1 Loop, UVL-SL2 Loop, 4-Wire UDL Loop (64, 56 kbs) and a 2-Wire ISDN Loop.

2.1.13.3 AT&T shall charge the applicable EEL to Loop Retermination rates found in Exhibit A. Fast Phones shall also be charged applicable manual service order, collocation cross-connect and EEL (including the Transport and Loop portions of the EEL) disconnect charges as set forth in Exhibit A of this Attachment.

2.1.13.4 The EEL to Loop Retermination process is not available when a dispatch outside the serving wire center where the Loop terminates is required. If an outside dispatch is required, or if the Loop portion of the EEL is not one of the Loop types referenced in Section 2.1.13.2 above, or if Fast Phones elects not to utilize the EEL to Loop Retermination process, Fast Phones must submit an LSR to disconnect the entire EEL circuit, and must submit a separate LSR for the requested standalone Loop. In such cases, Fast Phones will be charged the EEL disconnect charges and the full nonrecurring rates for installation of a new Loop, as set forth in Exhibit A.

2.1.13.5 The EEL to Loop Retermination process and requirements will be handled in accordance with the guidelines set forth in the Ordering Guidelines and CLEC Information Packages as referenced in Sections 1.13.1 and 1.13.2 above.

2.2 Unbundled Voice Loops (UVLs)

2.2.1 AT&T shall make available the following UVLs:

2.2.1.1 2-wire Analog Voice Grade Loop – SL1 (Non-Designed);

2.2.1.2 2-wire Analog Voice Grade Loop – SL2 (Designed); or

2.2.1.3 4-wire Analog Voice Grade Loop (Designed).

2.2.2 UVL may be provisioned using any type of facility that will support voice grade services. This may include loaded copper, non-loaded copper, digital loop carrier systems, fiber/copper combination (hybrid loop) or a combination of any of these facilities. AT&T, in the normal course of maintaining, repairing, and configuring its network, may also change the facilities that are used to provide any given voice grade circuit. This change may occur at any time. In these situations, AT&T will only ensure that the newly provided facility will support voice grade services. AT&T will not guarantee that Fast Phones will be able to continue to provide any advanced services over the new facility. AT&T will offer UVL in two different service levels - Service Level One (SL1) and Service Level Two (SL2).

2.2.3 Unbundled Voice Loop - SL1 (UVL-SL1). Loops are 2-wire loop start circuits, will be non-designed, and will not have remote access test points. OC will be offered as a chargeable option on SL1 Loops when reuse of existing facilities has been requested by Fast Phones, however, OC is always required on UCLs that involve the reuse of facilities that are currently providing service. Fast Phones may also order OC-TS when a specified conversion time is requested. OC-TS is a chargeable option for any coordinated order and is billed in addition to the OC charge. An Engineering Information (EI) document can be ordered as a chargeable option. The EI document provides Loop Make-Up information which is similar to the information normally provided in a Design Layout Record (DLR). Upon issuance of a non-coordinated order in the service order system, SL1 Loops will be activated on the due date in the same manner and time frames that AT&T normally activates POTS-type Loops for its customers.

2.2.4 For an additional charge AT&T will make available Loop Testing so that Fast Phones may request further testing on new UVL-SL1 Loops. Rates for Loop Testing are as set forth in Exhibit A.

2.2.5 Unbundled Voice Loop – SL2 (UVL-SL2). Loops may be 2-wire or 4-wire circuits, shall have remote access test points, and will be designed with a DLR provided to Fast Phones. SL2 circuits can be provisioned with loop start, ground start or reverse battery signaling. OC is provided as a standard feature on SL2 Loops. The OC feature will allow Fast Phones to coordinate the installation of the Loop with the disconnect of an existing customer's service and/or number

portability service. In these cases, AT&T will perform the order conversion with standard order coordination at its discretion during normal work hours.

2.3 Unbundled Digital Loops

2.3.1 AT&T will offer UDLs. UDLs are service specific, will be designed, will be provisioned with test points (where appropriate), and will come standard with OC and a DLR. The various UDLs are intended to support a specific digital transmission scheme or service.

2.3.2 AT&T shall make available the following UDLs, subject to restrictions set forth herein:

2.3.2.1 2-wire Unbundled ISDN Digital Loop;

2.3.2.2 2-wire Unbundled ADSL Compatible Loop;

2.3.2.3 2-wire Unbundled HDSL Compatible Loop;

2.3.2.4 4-wire Unbundled HDSL Compatible Loop;

2.3.2.5 4-wire Unbundled DS1 Digital Loop;

2.3.2.6 4-wire Unbundled Digital Loop/DS0 – 64 kbps, 56 kbps and below;

2.3.2.7 DS3 Loop; or

2.3.2.8 STS-1 Loop.

2.3.3 2-wire Unbundled ISDN Digital Loops. These will be provisioned according to industry standards for 2-Wire Basic Rate ISDN services and will come standard with a test point, OC, and a DLR. Fast Phones will be responsible for providing AT&T with a Service Profile Identifier (SPID) associated with a particular ISDN-capable Loop and customer. With the SPID, AT&T will be able to adequately test the circuit and ensure that it properly supports ISDN service.

2.3.4 2-wire ADSL-Compatible Loop. This is a designed Loop that is provisioned according to Revised Resistance Design (RRD) criteria and may be up to eighteen thousand (18,000) feet long and may have up to six thousand (6,000) feet of bridged tap (inclusive of Loop length). The Loop is a 2-wire circuit and will come standard with a test point, OC, and a DLR.

2.3.5 2-wire or 4-wire HDSL-Compatible Loop. This is a designed Loop that meets Carrier Serving Area (CSA) specifications, may be up to twelve thousand (12,000) feet long and may have up to twenty-five hundred (2,500) feet of bridged tap

(inclusive of Loop length). It may be a 2-wire or 4-wire circuit and will come standard with a test point, OC, and a DLR.

2.3.6 4-wire Unbundled DS1 Digital Loop.

2.3.6.1 This is a designed 4-wire Loop that is provisioned according to industry standards for DS1 or Primary Rate ISDN services and will come standard with a test point, OC, and a DLR. A DS1 Loop may be provisioned over a variety of loop transmission technologies including copper, HDSL-based technology or fiber optic transport systems. It will include a 4-wire DS1 Network Interface at the customer's location. For the purposes of AT&T's unbundling obligations pursuant to this Agreement, for the states of Alabama, Florida, Georgia, Mississippi and South Carolina, DS1 Loops include 2-wire and 4-wire copper Loops capable of providing high-bit rate digital subscriber line services, such as 2-wire and 4-wire HDSL Compatible Loops. For the state of Louisiana, DS1 Loops include 2-wire and 4-wire HDSL-Compatible Loops to which the necessary electronics have been added to provide service speeds of 1.544 megabytes per second.

2.3.6.2 AT&T shall not provide more than ten (10) unbundled DS1 Loops to Fast Phones at any single building in which DS1 Loops are available as unbundled Loops.

2.3.7 4-wire Unbundled Digital/DS0 Loop. These are designed 4-wire Loops that may be configured as sixty-four (64)kbps, fifty-six (56)kbps, nineteen (19)kbps, and other sub-rate speeds associated with digital data services and will come standard with a test point, OC, and a DLR.

2.3.8 DS3 Loop. DS3 Loop is a two-point digital transmission path which provides for simultaneous two-way transmission of serial, bipolar, return-to-zero isochronous digital electrical signals at a transmission rate of forty-four point seven thirty-six (44.736) megabits per second (Mbps) that is dedicated to the use of the ordering CLEC. It may provide transport for twenty-eight (28) DS1 channels, each of which provides the digital equivalent of twenty-four (24) analog voice grade channels. The interface to unbundled dedicated DS3 transport is a metallic-based electrical interface. For the purpose of AT&T's unbundling obligations pursuant to this Agreement, DS3 Loops include STS-1 Loops.

2.3.9 STS-1 Loop. STS-1 Loop is a high-capacity digital transmission path with SONET VT1.5 mapping that is dedicated for the use of the ordering customer. It is a two-point digital transmission path which provides for simultaneous two-way transmission of serial bipolar return-to-zero synchronous digital electrical signals at a transmission rate of fifty-one point eighty-four (51.84) Mbps. It may provide transport for twenty-eight (28) DS1 channels, each of which provides the digital equivalent of twenty-four (24) analog voice grade channels. The interface to unbundled dedicated STS-1 transport is a metallic-based electrical interface.

2.3.10 Both DS3 Loop and STS-1 Loop require a SI in order to ascertain availability.

2.3.11 DS3 services come with a test point and a DLR. Mileage is airline miles, rounded up and a minimum of one (1) mile applies. AT&T's TR73501 LightGate®Service Interface and Performance Specifications, Issue D, June 1995 applies to DS3 services.

2.3.12 Fast Phones may obtain a maximum of a single Unbundled DS3 Loop to any single building in which DS3 Loops are available as Unbundled Loops.

2.4 Unbundled Copper Loops (UCL).

2.4.1 AT&T shall make available UCLs. The UCL is a copper twisted pair Loop that is unencumbered by any intervening equipment (e.g., filters, load coils, range extenders, digital loop carrier, or repeaters) and is not intended to support any particular telecommunications service. The UCL will be offered in two (2) types – Designed and Non-Designed.

2.4.2 Unbundled Copper Loop – Designed (UCL-D)

2.4.2.1 The UCL-D will be provisioned as a dry copper twisted pair (2-wire or 4-wire) Loop that is unencumbered by any intervening equipment (e.g., filters, load coils, range extenders, digital loop carrier, or repeaters).

2.4.2.2 A UCL-D will be eighteen thousand (18,000) feet or less in length and is provisioned according to Resistance Design parameters, may have up to six thousand (6,000) feet of bridged tap and will have up to thirteen hundred (1300) Ohms of resistance.

2.4.2.3 The UCL-D is a designed circuit, is provisioned with a test point, and comes standard with a DLR. OC is a chargeable option for a UCL-D; however, OC is always required on UCLs where a reuse of existing facilities has been requested by Fast Phones.

2.4.2.4 These Loops are not intended to support any particular services and may be utilized by Fast Phones to provide a wide-range of telecommunications services as long as those services do not adversely affect AT&T's network. This facility will include a Network Interface Device (NID) at the customer's location for the purpose of connecting the Loop to the customer's inside wire.

2.4.3 Unbundled Copper Loop – Non-Designed (UCL-ND)

2.4.3.1 The UCL–ND is provisioned as a dedicated 2-wire metallic transmission facility from AT&T's Main Distribution Frame (MDF) to a customer's premises (including the NID). The UCL-ND will be a "dry copper" facility in that it will not

have any intervening equipment such as load coils, repeaters, or digital access main lines (DAMLs), and may have up to six thousand (6,000) feet of bridged tap between the customer's premises and the serving wire center. The UCL-ND typically will be thirteen hundred (1300) Ohms resistance and in most cases will not exceed eighteen thousand (18,000) feet in length, although the UCL-ND will not have a specific length limitation. For Loops less than eighteen thousand (18,000) feet and with less than thirteen hundred (1300) Ohms resistance, the Loop will provide a voice grade transmission channel suitable for loop start signaling and the transport of analog voice grade signals. The UCL-ND will not be designed and will not be provisioned with either a DLR or a test point.

2.4.3.2 The UCL-ND facilities may be mechanically assigned using AT&T's assignment systems. Therefore, the Loop Makeup (LMU) process is not required to order and provision the UCL-ND. However, Fast Phones can request LMU for which additional charges would apply.

2.4.3.3 For an additional charge, AT&T also will make available Loop Testing so that Fast Phones may request further testing on the UCL-ND. Rates for Loop Testing are as set forth in Exhibit A.

2.4.3.4 UCL-ND Loops are not intended to support any particular service and may be utilized by Fast Phones to provide a wide-range of telecommunications services as long as those services do not adversely affect AT&T's network. The UCL-ND will include a NID at the customer's location for the purpose of connecting the Loop to the customer's inside wire.

2.4.3.5 OC will be provided as a chargeable option and may be utilized when the UCL-ND provisioning is associated with the reuse of AT&T facilities. OC-TS does not apply to this product.

2.4.3.6 Fast Phones may use AT&T's Unbundled Loop Modification (ULM) offering to remove excessive bridged taps and/or load coils from any copper Loop within the AT&T network. Therefore, some Loops that would not qualify as UCL-ND could be transformed into Loops that do qualify, using the ULM process.

2.5 <u>Unbundled Loop Modifications (Line Conditioning)</u>

2.5.1 Line Conditioning is defined as routine network modification that AT&T regularly undertakes to provide xDSL services to its own customers. This may include the removal of any device, from a copper Loop or copper Subloop that may diminish the capability of the Loop or Subloop to deliver high-speed switched wireline telecommunications capability, including xDSL service. Such devices include, load coils, excessive bridged taps, low pass filters, and range extenders. Excessive bridged taps are bridged taps that serves no network design purpose and that are beyond the limits set according to industry standards and/or the AT&T's TR

73600 Unbundled Local Loop Technical Specification. AT&T shall provide Line Conditioning on Loops, as requested by Fast Phones, even in instances where AT&T does not provide advanced services to the end user on that Loop.

2.5.2 AT&T will remove load coils only on copper Loops that are equal to or less than eighteen thousand (18,000) feet in length. AT&T will remove load coils on copper Subloops where the total loop distance (feeder plus distribution) from the AT&T central office to the end user is equal to or less than 18,000 feet or, if there is no copper feeder, the distance from the remote terminal (RT) to the end user is equal to or less than 18,000 feet.

2.5.3 For any copper loop being ordered by Fast Phones which has over six thousand (6,000) feet of combined bridged tap will be modified, upon request from Fast Phones, so that the loop will have a maximum of six thousand (6,000) feet of bridged tap. This modification will be performed at no additional charge to Fast Phones. Loop conditioning orders that require the removal of bridged tap that serves no network design purpose on a copper Loop that will result in a combined total of bridged tap between two thousand five hundred (2,500) and six thousand (6,000) feet will be performed at the rates set forth in Exhibit A.

2.5.4 Fast Phones may request removal of any unnecessary and non-excessive bridged tap (bridged tap between zero (0) and two thousand five hundred (2,500) feet which serves no network design purpose), at rates pursuant to AT&T's SC Process as mutually agreed to by the Parties.

2.5.5 Rates for ULM are as set forth in Exhibit A.

2.5.6 AT&T will not modify a Loop in such a way that it no longer meets the technical parameters of the original Loop type (e.g., voice grade, ADSL, etc.) being ordered.

2.5.7 If Fast Phones requests ULM on a reserved facility for a new Loop order, AT&T may perform a pair change and provision a different Loop facility in lieu of the reserved facility with ULM if feasible. The Loop provisioned will meet or exceed specifications of the requested Loop facility as modified. Fast Phones will not be charged for ULM if a different Loop is provisioned. For Loops that require a DLR or its equivalent, AT&T will provide LMU detail of the Loop provisioned.

2.5.8 Fast Phones shall request Loop make up information pursuant to this Attachment prior to submitting a service inquiry and/or a LSR for the Loop type that Fast Phones desires AT&T to condition.

2.5.9 When requesting ULM for a Loop that AT&T has previously provisioned for Fast Phones, Fast Phones will submit a SI to AT&T. If a spare Loop facility that meets the Loop modification specifications requested by Fast Phones is available at the

location for which the ULM was requested, Fast Phones will have the option to change the Loop facility to the qualifying spare facility rather than to provide ULM. In the event that AT&T changes the Loop facility in lieu of providing ULM, Fast Phones will not be charged for ULM but will only be charged the service order charges for submitting an order.

2.6 Loop Provisioning Involving IDLC

2.6.1 Where Fast Phones has requested an Unbundled Loop and AT&T uses IDLC systems to provide the local service to the customer and AT&T has a suitable alternate facility available, AT&T will make such alternative facilities available to Fast Phones. If a suitable alternative facility is not available, then to the extent it is technically feasible, AT&T will implement one of the following alternative arrangements for Fast Phones (e.g., hairpinning):

1. Roll the circuit(s) from the IDLC to any spare copper that exists to the customer premises.
2. Roll the circuit(s) from the IDLC to an existing DLC that is not integrated.
3. If capacity exists, provide "side-door" porting through the switch.
4. If capacity exists, provide "Digital Access Cross-Connect System (DACS)-door" porting (if the IDLC routes through a DACS prior to integration into the switch).

2.6.2 Arrangements 3 and 4 above require the use of a designed circuit. Therefore, non-designed Loops such as the SL1 voice grade and UCL-ND may not be ordered in these cases.

2.6.2.1 If no alternate facility is available, and upon request from Fast Phones, and if agreed to by both Parties, AT&T may utilize its SC process to determine the additional costs required to provision facilities. Fast Phones will then have the option of paying the one-time SC rates to place the Loop.

2.7 Network Interface Device

2.7.1 The NID is defined as any means of interconnection of the customer's customer premises wiring to AT&T's distribution plant, such as a cross-connect device used for that purpose. The NID is a single line termination device or that portion of a multiple line termination device required to terminate a single line or circuit at the premises. The NID features two (2) independent chambers or divisions that separate the service provider's network from the customer's premises wiring. Each chamber or division contains the appropriate connection points or posts to which the service provider and the customer each make their connections. The NID provides a protective ground connection and is capable of terminating cables such as twisted pair cable.

2.7.2 AT&T shall permit Fast Phones to connect Fast Phones's Loop facilities to the customer's customer premises wiring through the AT&T NID or at any other technically feasible point.

2.7.3 Access to NID

2.7.3.1 Fast Phones may access the customer's premises wiring by any of the following means and Fast Phones shall not disturb the existing form of electrical protection and shall maintain the physical integrity of the NID:

2.7.3.1.1 AT&T shall allow Fast Phones to connect its Loops directly to AT&T's multi-line residential NID enclosures that have additional space and are not used by AT&T or any other telecommunications carriers to provide service to the premises;

2.7.3.1.2 Where an adequate length of the customer's customer premises wiring is present and environmental conditions permit, either Party may remove the customer premises wiring from the other Party's NID and connect such wiring to that Party's own NID;

2.7.3.1.3 Either Party may enter the subscriber access chamber or dual chamber NID enclosures for the purpose of extending a cross-connect or spliced jumper wire from the customer premises wiring through a suitable "punch-out" hole of such NID enclosures; or

2.7.3.1.4 Fast Phones may request AT&T to make other rearrangements to the customer premises wiring terminations or terminal enclosure on a time and materials cost basis.

2.7.3.2 In no case shall either Party remove or disconnect the other Party's loop facilities from either Party's NIDs, enclosures, or protectors unless the applicable Commission has expressly permitted the same and the disconnecting Party provides prior notice to the other Party. In such cases, it shall be the responsibility of the Party disconnecting loop facilities to leave undisturbed the existing form of electrical protection and to maintain the physical integrity of the NID. It will be Fast Phones's responsibility to ensure there is no safety hazard, and Fast Phones will hold AT&T harmless for any liability associated with the removal of the AT&T Loop from the AT&T NID. Furthermore, it shall be the responsibility of the disconnecting Party, once the other Party's loop has been disconnected from the NID, to reconnect the disconnected loop to a nationally recognized testing laboratory listed station protector, which has been grounded as per Article 800 of the National Electrical Code. If no spare station protector exists in the NID, the disconnected loop must be appropriately cleared, capped and stored.

2.7.3.3 Fast Phones shall not remove or disconnect ground wires from AT&T's NIDs, enclosures, or protectors.

2.7.3.4 Fast Phones shall not remove or disconnect NID modules, protectors, or terminals from AT&T's NID enclosures.

2.7.3.5 Due to the wide variety of NID enclosures and outside plant environments, AT&T will work with Fast Phones to develop specific procedures to establish the most effective means of implementing this section if the procedures set forth herein do not apply to the NID in question.

2.7.4 Technical Requirements

2.7.4.1 The NID shall provide an accessible point of interconnection and shall maintain a connection to ground.

2.7.4.2 If an existing NID is accessed, it shall be capable of transferring electrical analog or digital signals between the customer's customer premises and the distribution media and/or cross-connect to Fast Phones's NID.

2.7.4.3 Existing AT&T NIDs will be operational and provided in "as is" condition. Fast Phones may request AT&T to do additional work to the NID on a time and material basis. When Fast Phones deploys its own local loops in a multiple-line termination device, Fast Phones shall specify the quantity of NID connections that it requires within such device.

2.8 Subloop Distribution Elements.

2.8.1 Where facilities permit, AT&T shall offer access to its Unbundled Subloop Distribution (USLD) elements in accordance with 47 C.F.R. § 51.319(b) as specified herein.

2.8.2 Unbundled Subloop Distribution

2.8.2.1 The USLD facility is a dedicated transmission facility that AT&T provides from a customer's point of demarcation to an AT&T cross-connect device. The AT&T cross-connect device may be located within a remote terminal (RT) or a stand-alone cross-box in the field or in the equipment room of a building. The USLD media is a copper twisted pair that can be provisioned as a 2-wire or 4-wire facility. AT&T will make available the following subloop distribution offerings where facilities exist:

USLD – Voice Grade (USLD-VG)
Unbundled Copper Subloop (UCSL)
USLD – Intrabuilding Network Cable (USLD-INC (aka riser cable))

2.8.2.2 USLD-VG is a copper subloop facility from the cross-box in the field up to and including the point of demarcation at the customer's premises and may have load coils.

2.8.2.3 UCSL is a copper facility eighteen thousand (18,000) feet or less in length provided from the cross-box in the field up to and including the customer's point of demarcation. If available, this facility will not have any intervening equipment such as load coils between the customer and the cross-box.

2.8.2.3.1 If Fast Phones requests a UCSL and it is not available, Fast Phones may request the copper Subloop facility be modified pursuant to the ULM process to remove load coils and/or excessive bridged taps. If load coils and/or excessive bridged taps are removed, the facility will be classified as a UCSL.

2.8.2.4 USLD-INC is the distribution facility owned or controlled by AT&T inside a building or between buildings on the same property that is not separated by a public street or road. USLD-INC includes the facility from the cross-connect device in the building equipment room up to and including the point of demarcation at the customer's premises.

2.8.2.4.1 Upon request for USLD-INC from Fast Phones, AT&T will install a cross-connect panel in the building equipment room for the purpose of accessing USLD-INC pairs from a building equipment room. The cross-connect panel will function as a single point of interconnection (SPOI) for USLD-INC and will be accessible by multiple carriers as space permits. AT&T will place cross-connect blocks in twenty five (25) pair increments for Fast Phones's use on this cross-connect panel. Fast Phones will be responsible for connecting its facilities to the twenty five (25) pair cross-connect block(s).

2.8.2.5 For access to Voice Grade USLD and UCSL, Fast Phones shall install a cable to the AT&T cross-box pursuant to the terms and conditions for physical collocation for remote sites set forth in Attachment 4. This cable would be connected by an AT&T technician within the AT&T cross-box during the set-up process. Fast Phones's cable pairs can then be connected to AT&T's USL within the AT&T cross-box by the AT&T technician.

2.8.2.6 Through the SI process, AT&T will determine whether access to USLs at the location requested by Fast Phones is technically feasible and whether sufficient capacity exists in the cross-box. If existing capacity is sufficient to meet Fast Phones's request, then AT&T will perform the site set-up as described in the CLEC Information Package, located at AT&T's Interconnection Web site.

2.8.2.7 The site set-up must be completed before Fast Phones can order Subloop pairs. For the site set-up in an AT&T cross-connect box in the field, AT&T will perform the necessary work to splice Fast Phones's cable into the cross-connect box. For

the site set-up inside a building equipment room, AT&T will perform the necessary work to install the cross-connect panel and the connecting block(s) that will be used to provide access to the requested USLs.

2.8.2.8 Once the site set-up is complete, Fast Phones will request Subloop pairs through submission of a LSR form to the LCSC. OC is required with USL pair provisioning when Fast Phones requests reuse of an existing facility, and the OC charge shall be billed in addition to the USL pair rate. For expedite requests by Fast Phones for Subloop pairs, expedite charges will apply for intervals less than five (5) days.

2.8.2.9 USLs will be provided in accordance with AT&T's TR 73600 Unbundled Local Loop Technical Specifications.

2.8.3 Unbundled Network Terminating Wire (UNTW)

2.8.3.1 UNTW is unshielded twisted copper wiring that is used to extend circuits from an intra-building network cable terminal or from a building entrance terminal to an individual customer's point of demarcation. It is the final portion of the Loop that in multi-subscriber configurations represents the point at which the network branches out to serve individual subscribers.

2.8.3.2 This element will be provided in MDUs and/or Multi-Tenants Units (MTUs) where either Party owns wiring all the way to the customer's premises. Neither Party will provide this element in locations where the property owner provides its own wiring to the customer's premises, where a third party owns the wiring to the customer's premises.

2.8.3.3 Requirements

2.8.3.3.1 On a multi-unit premises, upon request of the other Party (Requesting Party), the Party owning the network terminating wire (Provisioning Party) will provide access to UNTW pairs on an Access Terminal that is suitable for use by multiple carriers at each Garden Terminal or Wiring Closet.

2.8.3.3.2 The Provisioning Party shall not be required to install new or additional NTW beyond existing NTW to provision the services of the Requesting Party.

2.8.3.3.3 In existing MDUs and/or MTUs in which AT&T does not own or control wiring (INC/NTW) to the customers premises, and Fast Phones does own or control such wiring, Fast Phones will install UNTW Access Terminals for AT&T under the same terms and conditions as AT&T provides UNTW Access Terminals to Fast Phones.

2.8.3.3.4 In situations in which AT&T activates a UNTW pair, AT&T will compensate Fast Phones for each pair activated commensurate to the price specified in Fast Phones's Agreement.

2.8.3.3.5 Upon receipt of the UNTW SI requesting access to the Provisioning Party's UNTW pairs at a multi-unit premises, representatives of both Parties will participate in a meeting at the site of the requested access. The purpose of the site visit will include discussion of the procedures for installation and location of the Access Terminals. By request of the Requesting Party, an Access Terminal will be installed either adjacent to each of the Provisioning Party's Garden Terminal or inside each Wiring Closet. The Requesting Party will deliver and connect its central office facilities to the UNTW pairs within the Access Terminal. The Requesting Party may access any available pair on an Access Terminal. A pair is available when a pair is not being utilized to provide service or where the customer has requested a change in its local service provider to the Requesting Party. Prior to connecting the Requesting Party's service on a pair previously used by the Provisioning Party, the Requesting Party is responsible for ensuring the customer is no longer using the Provisioning Party's service or another CLEC's service before accessing UNTW pairs.

2.8.3.3.6 Access Terminal installation intervals will be established on an individual case basis.

2.8.3.3.7 The Requesting Party is responsible for obtaining the property owner's permission for the Provisioning Party to install an Access Terminal(s) on behalf of the Requesting Party. The submission of the SI by the Requesting Party will serve as certification by the Requesting Party that such permission has been obtained. If the property owner objects to Access Terminal installations that are in progress or within thirty (30) days after completion and demands removal of Access Terminals, the Requesting Party will be responsible for costs associated with removing Access Terminals and restoring the property to its original state prior to Access Terminals being installed.

2.8.3.3.8 The Requesting Party shall indemnify and hold harmless the Provisioning Party against any claims of any kind that may arise out of the Requesting Party's failure to obtain the property owner's permission. The Requesting Party will be billed for nonrecurring and recurring charges for accessing UNTW pairs at the time the Requesting Party activates the pair(s). The Requesting Party will notify the Provisioning Party within five (5) business days of activating UNTW pairs using the LSR form.

2.8.3.3.9 If a trouble exists on a UNTW pair, the Requesting Party may use an alternate spare pair that serves that customer if a spare pair is available. In such cases, the Requesting Party will re-terminate its existing jumper from the defective pair to the spare pair. Alternatively, the Requesting Party will isolate and report troubles in

the manner specified by the Provisioning Party. The Requesting Party must tag the UNTW pair that requires repair. If the Provisioning Party dispatches a technician on a reported trouble call and no UNTW trouble is found, the Provisioning Party will charge Requesting Party for time spent on the dispatch and testing the UNTW pair(s).

2.8.3.3.10 If the Requesting Party initiates the Access Terminal installation and the Requesting Party has not activated at least ten percent (10%) of the capacity of the Access Terminal installed pursuant to the Requesting Party's request for an Access Terminal within six (6) months of installation of the Access Terminal, the Provisioning Party will bill the Requesting Party a nonrecurring charge equal to the actual cost of provisioning the Access Terminal.

2.8.3.3.11 If the Provisioning Party determines that the Requesting Party is using the UNTW pairs without reporting the activation of the pairs, the Requesting Party will be billed for the use of that pair back to the date the customer began receiving service from the Requesting Party at that location. Upon request, the Requesting Party will provide copies of its billing record to substantiate such date. If the Requesting Party fails to provide such records, then the Provisioning Party will bill the Requesting Party back to the date of the Access Terminal installation.

2.9 Loop Makeup

2.9.1 Description of Service

2.9.1.1 AT&T shall make available to Fast Phones LMU information with respect to Loops that are required to be unbundled under this Agreement so that Fast Phones can make an independent judgment about whether the Loop is capable of supporting the advanced services equipment Fast Phones intends to install and the services Fast Phones wishes to provide. LMU is a preordering transaction, distinct from Fast Phones ordering any other service(s). Loop Makeup Service Inquiries (LMUSI) and mechanized LMU queries for preordering LMU are likewise unique from other preordering functions with associated SIs as described in this Agreement.

2.9.1.2 AT&T will provide Fast Phones LMU information consisting of the composition of the Loop material (copper/fiber); the existence, location and type of equipment on the Loop, including but not limited to digital loop carrier or other remote concentration devices, feeder/distribution interfaces, bridged taps, load coils, pair-gain devices; the Loop length; the wire gauge and electrical parameters.

2.9.1.3 AT&T's LMU information is provided to Fast Phones as it exists either in AT&T's databases or in its hard copy facility records. AT&T does not guarantee accuracy or reliability of the LMU information provided.

2.9.1.4 AT&T's provisioning of LMU information to the requesting CLEC for facilities is contingent upon either AT&T or the requesting CLEC controlling the Loop(s) that serve the service location for which LMU information has been requested by the CLEC. The requesting CLEC is not authorized to receive LMU information on a facility used or controlled by another CLEC unless AT&T receives a LOA from the voice CLEC (owner) or its authorized agent on the LMUSI submitted by the requesting CLEC.

2.9.1.5 Fast Phones may choose to use equipment that it deems will enable it to provide a certain type and level of service over a particular AT&T Loop as long as that equipment does not disrupt other services on the AT&T network. The determination shall be made solely by Fast Phones and AT&T shall not be liable in any way for the performance of the advanced data services provisioned over said Loop. The specific Loop type (e.g., ADSL, HDSL, or otherwise) ordered on the LSR must match the LMU of the Loop reserved taking into consideration any requisite line conditioning. The LMU data is provided for informational purposes only and does not guarantee Fast Phones's ability to provide advanced data services over the ordered Loop type. Furthermore, the LMU information for Loops other than copper-only Loops (e.g., ADSL, UCL-ND, etc.) that support xDSL services, is subject to change at any time due to modifications and/or upgrades to AT&T's network. Except as set forth in Section 2.9.1.6 below, copper-only Loops will not be subject to change due to modification and/or upgrades to AT&T's network and will remain on copper facilities until the Loop is disconnected by Fast Phones or the customer, or until AT&T retires the copper facilities via the FCC's and any applicable Commission's requirements. Fast Phones is fully responsible for any of its service configurations that may differ from AT&T's technical standard for the Loop type ordered.

2.9.1.6 If AT&T retires its copper facilities using 47 C.F.R § 51.325(a) requirements; or is required by a governmental agency or regulatory body to move or replace copper facilities as a maintenance procedure, AT&T will notify Fast Phones, according to the applicable network disclosure requirements. It will be Fast Phones's responsibility to move any service it may provide over such facilities to alternative facilities. If Fast Phones fails to move the service to alternative facilities by the date in the network disclosure notice, AT&T may terminate the service to complete the network change.

2.9.2 <u>Submitting LMUSI</u>

2.9.2.1 Fast Phones may obtain LMU information and reserve facilities by submitting a mechanized LMU query or a manual LMUSI according to the terms and conditions as described in the LMU CLEC Information Package, incorporated herein by reference as it may be amended from time to time. The CLEC Information Package is located at the "CLEC UNE Product" on AT&T's Interconnection Web site. After obtaining the Loop information from the

mechanized LMU process, if Fast Phones needs further Loop information in order to determine Loop service capability, Fast Phones may initiate a separate Manual SI for a separate nonrecurring charge as set forth in Exhibit A.

2.9.2.2 All LSRs issued for reserved facilities shall reference the facility reservation number as provided by AT&T. Fast Phones will not be billed any additional LMU charges for the Loop ordered on such LSR. If, however, Fast Phones does not reserve facilities upon an initial LMUSI, Fast Phones's placement of an order for an advanced data service type facility will incur the appropriate billing charges to include SI and reservation per Exhibit A.

2.9.2.3 Where Fast Phones has reserved multiple Loop facilities on a single reservation, Fast Phones may not specify which facility shall be provisioned when submitting the LSR. For those occasions, AT&T will assign to Fast Phones, subject to availability, a facility that meets the AT&T technical standards of the AT&T type Loop as ordered by Fast Phones.

2.9.2.4 Charges for preordering manual LMUSI or mechanized LMU are separate from any charges associated with ordering other services from AT&T.

3 Line Splitting

3.1 Line splitting shall mean that a provider of data services (a Data LEC) and a provider of voice services (a Voice CLEC) to deliver voice and data service to customers over the same Loop. The Voice CLEC and Data LEC may be the same or different carriers. AT&T will provide Line Splitting over a Loop (UNE-L) purchased by Fast Phones pursuant to this Agreement.

3.2 Line Splitting – UNE-L. In the event Fast Phones provides its own switching or obtains switching from a third party, Fast Phones may engage in line splitting arrangements with another CLEC using a splitter, provided by Fast Phones, in a Collocation Space at the central office where the loop terminates into a distribution frame or its equivalent.

3.3 AT&T must make all necessary network modifications, including providing nondiscriminatory access to OSS necessary for pre-ordering, ordering, provisioning, maintenance and repair, and billing for Loops used in line splitting arrangements. The Parties may use the Change Control Process to address necessary OSS modifications.

3.4 Provisioning Line Splitting – UNE-L

3.4.1 The Voice CLEC provides the splitter when providing Line Splitting with UNE-L. When Fast Phones owns the splitter, Line Splitting requires the following: a loop

from NID at the customer's location to the serving wire center and terminating into a distribution frame or its equivalent.

3.4.2 An unloaded 2-wire copper Loop must serve the customer. The meet point for the Voice CLEC and the Data LEC is the point of termination on the MDF for the Data LEC's cable and pairs.

3.4.3 To order Line Splitting utilizing UNE-L on a particular Loop, Fast Phones must have a DSLAM collocated in the central office that serves the customer of such Loop.

3.4.4 Fast Phones may purchase, install and maintain central office POTS splitters in its collocation arrangements. Fast Phones may use such splitters for access to its customers and to provide digital line subscriber services to its customers using the high frequency spectrum of the UNE-L. Existing Collocation rules and procedures and the terms and conditions relating to Collocation set forth in Attachment 4-Central Office shall apply.

3.5 Maintenance – Line Splitting – UNE-L

3.5.1 AT&T will be responsible for repairing voice troubles and the troubles with the physical loop between the NID at the customer's premises and the termination point.

3.5.2 Fast Phones shall indemnify, defend and hold harmless AT&T from and against any claims, losses, actions, causes of action, suits, demands, damages, injury, and costs including reasonable attorney fees, which arise out of actions related to the other service provider, except to the extent caused by AT&T's gross negligence or willful misconduct.

3.5.3 For the state of Alabama, the following rights are in addition to the general indemnification rights set forth above:

3.5.3.1 PROVIDED, HOWEVER, that all amounts advanced in respect of such claims, losses and costs shall be repaid to Fast Phones by AT&T if it shall ultimately be determined in a final judgment without further appeal by a court of appropriate jurisdiction that AT&T is not entitled to be indemnified for such claims, losses and costs because the Claims, Losses and Costs arose as a result of AT&T's gross negligence or willful misconduct.

3.5.3.2 AT&T will indemnify, defend and hold harmless Fast Phones from and against any Claims, Losses and Costs which arise out of actions related to the other service provider (i.e. CLEC party to the line splitting arrangement who is not Fast Phones brought against Fast Phones to the extent such Claim alleges that the cause of

Claim, Loss and Cost was found to be the result of AT&T's gross negligence or willful misconduct.

3.5.3.3 PROVIDED, HOWEVER, that AT&T shall have no obligation to indemnify Fast Phones under this section unless Fast Phones provides AT&T with prompt written notice of any such Claim; Fast Phones permits AT&T to assume and control the defense to such action, with counsel chosen by AT&T; and AT&T does not enter into any settlement or compromise of such Claim.

3.5.3.4 PROVIDED, HOWEVER, that all amounts advanced in respect of such Claims, Losses and Costs shall be repaid to AT&T by Fast Phones if it shall ultimately be determined in a final judgment without further appeal by a court of appropriate jurisdiction that Fast Phones is not entitled to be indemnified for such Claims, Losses and Costs because the Claims, Losses and Costs did not arises as a result of AT&T's gross negligence or willful misconduct.

3.5.3.5 Definitions:

3.5.3.5.1 "Claim" means any threatened, pending or completed action, suit or proceeding, or any inquiry or investigation that AT&T or Fast Phones in good faith believes might lead to the institution of any such action, suit or proceeding.

3.5.3.5.2 "Loss" means any and all damages, injuries, judgments, fines penalties, amounts paid or payable in settlement, deficiencies, and expenses (including all interest, assessments, and other charges paid or payable in connection with or respect of such Losses) incurred in connection with the Claim.

3.5.3.5.3 "Costs" means all reasonable attorney's fees and all other reasonable fees, expenses and obligations paid or incurred in connection with the Claim or related matters, including without limitation, investigating, defending, or participating (as a party, witness or otherwise) in (including on appeal), or preparing to defend or participate in any Claim.

3.6 <u>Line Splitting – Loop and Port for the states of Georgia and North Carolina only</u>

3.6.1 To the extent Fast Phones is using a commingled arrangement that consists of a Loop purchased pursuant to this Agreement and Local Switching provided by AT&T pursuant to Section 271, AT&T will permit Fast Phones to utilize Line Splitting. AT&T shall charge the applicable line splitting rates set forth in Exhibit A of this Agreement.

3.6.2 Fast Phones shall provide AT&T with a signed LOA between it and the third party CLEC (Data CLEC or Voice CLEC) with which it desires to provision Line Splitting services, where Fast Phones will not provide voice and data services.

3.6.3 Provisioning Line Splitting and Splitter Space – Loop and Port

3.6.3.1 The Data LEC, Voice CLEC, or a third party may provide the splitter. When Fast Phones or its authorized agent owns the splitter, Line Splitting requires the following: a non-designed analog Loop from the serving wire center to the NID at the customer's location; a collocation cross-connection connecting the Loop to the collocation space; and a second collocation cross-connection from the collocation space connected to a voice port.

3.6.3.2 An unloaded 2-wire copper Loop must serve the customer. The meet point for the Voice CLEC and the Data CLEC is the point of termination on the MDF for the Data CLEC's cable and pairs.

3.6.4 CLEC Provided Splitter – Line Splitting – Loop and Port

3.6.4.1 Fast Phones or its authorized agent may purchase, install and maintain central office line splitters in its collocation arrangements. Fast Phones or its authorized agent may use such splitters for access to its customers and to provide digital line subscriber services to its customers using the High Frequency Spectrum. Existing collocation rules and procedures and the terms and conditions relating to collocation set forth in Attachment 4-Central Office shall apply.

3.6.4.2 Any splitters installed by Fast Phones or its authorized agent in its collocation arrangement shall comply with ANSI T1.413, Annex E, or any future ANSI splitter standards. Fast Phones or its authorized agent may install any splitters that AT&T deploys or permits to be deployed for itself or any AT&T affiliate.

3.6.5 Maintenance – Line Splitting – Loop and Port

3.6.5.1 AT&T will be responsible for repairing troubles with the physical Loop between the NID at the customer's premises and the termination point.

4 Unbundled Network Element Combinations

4.1 For purposes of this Section, references to "Currently Combined" Network Elements shall mean that the particular Network Elements requested by Fast Phones are in fact already combined by AT&T in the AT&T network. References to "Ordinarily Combined" Network Elements shall mean that the particular Network Elements requested by Fast Phones are not already combined by AT&T in the location requested by Fast Phones but are elements that are typically combined in AT&T's network. References to "Not Typically Combined" Network Elements shall mean that the particular Network Elements requested by Fast Phones are not elements that AT&T combines for its use in its network.

4.1.1 Except as otherwise set forth in this Agreement, upon request, AT&T shall perform the functions necessary to combine Network Elements that AT&T is required to provide under this Agreement in any manner, even if those elements are not ordinarily combined in AT&T's network, provided that such Combination is technically feasible and will not undermine the ability of other carriers to obtain access to Network Elements or to interconnect with AT&T's network.

4.1.2 To the extent Fast Phones requests a Combination for which AT&T does not have methods and procedures in place to provide such Combination, rates and/or methods or procedures for such Combination will be developed pursuant to the BFR process.

4.2 Rates

4.2.1 The rates for the Currently Combined Network Elements specifically set forth in Exhibit A shall be the rates associated with such Combinations. Where a Currently Combined Combination is not specifically set forth in Exhibit A, the rate for such Currently Combined Combination shall be the sum of the recurring rates for those individual Network Elements as set forth in Exhibit A and/or Exhibit B in addition to the applicable nonrecurring switch-as-is charge set forth in Exhibit A.

4.2.2 The rates for the Ordinarily Combined Network Elements specifically set forth in Exhibit A shall be the nonrecurring and recurring charges for those Combinations. Where an Ordinarily Combined Combination is not specifically set forth in Exhibit A, the rate for such Ordinarily Combined Combination shall be the sum of the recurring rates for those individual Network Elements as set forth in Exhibit A and/or Exhibit B and nonrecurring rates for those individual Network Elements as set forth in Exhibit A.

4.2.3 The rates for Not Typically Combined Combinations shall be developed pursuant to the BFR process upon request of Fast Phones.

4.3 Enhanced Extended Links (EELs)

4.3.1 EELs are combinations of Loops and Dedicated Transport as defined in this Attachment, together with any facilities, equipment, or functions necessary to combine those Network Elements. AT&T shall provide Fast Phones with EELs where the underlying Network Element are available and are required to be provided pursuant to this Agreement and in all instances where the requesting carrier meets the eligibility requirements, if applicable.

4.3.2 High-capacity EELs are (1) combinations of Loop and Dedicated Transport, (2) Dedicated Transport commingled with a wholesale loop, or (3) a loop commingled with wholesale transport at the DS1 and/or DS3 level as described in 47 C.F.R. § 51.318(b).

4.3.3 By placing an order for a high-capacity EEL, Fast Phones thereby certifies that the service eligibility criteria set forth herein are met for access to a converted high-capacity EEL, a new high-capacity EEL, or part of a high-capacity commingled EEL as a Network Element. AT&T shall have the right to audit Fast Phones's high-capacity EELs as specified below.

4.3.4 Service Eligibility Criteria

4.3.4.1 High capacity EELs must comply with the following service eligibility requirements. Fast Phones must certify for each high-capacity EEL that all of the following service eligibility criteria are met:

4.3.4.1.1 Fast Phones has received state certification to provide local voice service in the area being served;

4.3.4.2 For each combined circuit, including each DS1 circuit, each DS1 EEL, and each DS1-equivalent circuit on a DS3 EEL:

4.3.4.2.1 1) Each circuit to be provided to each customer will be assigned a local number prior to the provision of service over that circuit;

4.3.4.2.2 2) Each DS1-equivalent circuit on a DS3 EEL must have its own local number assignment so that each DS3 must have at least twenty-eight (28) local voice numbers assigned to it;

4.3.4.2.3 3) Each circuit to be provided to each customer will have 911 or E911 capability prior to provision of service over that circuit;

4.3.4.2.4 4) Each circuit to be provided to each customer will terminate in a collocation arrangement that meets the requirements of 47 C.F.R. § 51.318(c);

4.3.4.2.5 5) Each circuit to be provided to each customer will be served by an interconnection trunk over which Fast Phones will transmit the calling party's number in connection with calls exchanged over the trunk;

4.3.4.2.6 6) For each twenty-four (24) DS1 EELs or other facilities having equivalent capacity, Fast Phones will have at least one (1) active DS1 local service interconnection trunk over which Fast Phones will transmit the calling party's number in connection with calls exchanged over the trunk; and

4.3.4.2.7 7) Each circuit to be provided to each customer will be served by a switch capable of switching local voice traffic.

4.3.4.3 AT&T may, on an annual basis, audit Fast Phones's records in order to verify compliance with the qualifying service eligibility criteria. To invoke the audit, AT&T will send a Notice of Audit to Fast Phones. Such Notice of Audit will be

delivered to Fast Phones no less than thirty (30) days prior to the date upon which AT&T seeks to commence an audit.

4.3.4.3.1 Such Notice of Audit to Fast Phones shall state AT&T's concern that Fast Phones is not complying with the service eligibility requirements as set forth above and a concise statement of the reasons therefor. AT&T is not required to provide documentation, as distinct from a statement of concern, to support its basis for an audit, or seek the concurrence of the requesting carrier before selecting the location of the audit. AT&T may select the independent auditor without the prior approval of Fast Phones or the Commission. Challenges to the independence of the auditor may be filed with the Commission only after the audit has been concluded.

4.3.4.3.2 For the state of Alabama, Fast Phones may, however, challenge the legal qualifications of the auditor selected by filing an objection to that effect with the Commission within 10 days of receiving AT&T's Notice of Audit.

4.3.4.3.3 For the state of Louisiana, AT&T's notice to Fast Phones shall include a listing of the circuits for which AT&T alleges noncompliance, including all supporting documentation and a list of three auditors from which Fast Phones may choose one to conduct the audit.

4.3.4.4 The audit shall be conducted by a third party independent auditor, and the audit must be performed in accordance with the standards established by the American Institute for Certified Public Accountants (AICPA) which will require the auditor to perform an "examination engagement" and issue a report regarding Fast Phones's compliance with the high capacity EEL eligibility criteria. AICPA standards and other AICPA requirements will be used to determine the independence of an auditor. The independent auditor's report will conclude whether Fast Phones complied in all material respects with the applicable service eligibility criteria. Consistent with standard auditing practices, such audits require compliance testing designed by the independent auditor.

4.3.4.5 To the extent the independent auditor's report concludes that Fast Phones failed to comply with the service eligibility criteria, Fast Phones must true-up any difference in payments, convert all noncompliant circuits to the appropriate service, and make the correct payments on a going-forward basis. In the event the auditor's report concludes that Fast Phones did not comply in any material respect with the service eligibility criteria, Fast Phones shall reimburse AT&T for the cost of the independent auditor. To the extent the auditor's report concludes that Fast Phones did comply in all material respects with the service eligibility criteria, AT&T will reimburse Fast Phones for its reasonable and demonstrable costs associated with the audit. Fast Phones will maintain appropriate documentation to support its certifications. The Parties shall provide such reimbursement within thirty (30) days of receipt of a statement of such costs.

4.3.4.5.1 For the state of Alabama, Fast Phones will maintain appropriate documentation to support its certifications and may dispute any portion of the findings of an audit by petitioning the Commission for a review within twenty (20) days of receiving the reported findings of the auditor.

4.3.4.6 In the event Fast Phones converts special access services to Network Elements, Fast Phones shall be subject to the termination liability provisions in the applicable special access tariffs, if any.

5 Dedicated Transport and Dark Fiber Transport

5.1 Dedicated Transport. Dedicated Transport is defined as AT&T's transmission facilities between wire centers or switches owned by AT&T, or between wire centers or switches owned by AT&T and switches owned by Fast Phones, including but not limited to DS1, DS3 and OCn level services, as well as dark fiber, dedicated to Fast Phones. AT&T shall not be required to provide access to OCn level Dedicated Transport under any circumstances pursuant to this Agreement.

5.2 DS1 and DS3 Dedicated Transport Requirements

5.2.1 For purposes of this Section 5.2, a Business Line is as defined in 47 C.F.R. § 51.5.

5.2.2 Notwithstanding anything to the contrary in this Agreement, AT&T shall make available Dedicated Transport as described in this Agreement, except in any wire center meeting the criteria described below:

5.2.2.1 DS1 Dedicated Transport where both wire centers at the end points of the route contain thirty-eight thousand (38,000) or more Business Lines or four (4) or more fiber-based collocators.

5.2.2.2 DS3 Dedicated Transport where both wire centers at the end points of the route contain twenty-four thousand (24,000) or more Business Lines or three (3) or more fiber-based collocators.

5.2.2.3 The Master List of Unimpaired Wire Centers and AT&T's List of Unimpaired Wire Centers, as described in Section 1.8, sets forth the list of wire centers meeting the criteria set forth in Sections 5.2.2.1 and 5.2.2.2 above as of March 11, 2005.

5.2.2.4 Once a wire center meets or exceeds either of the thresholds set forth in Section 5.2.2.1 above, no future DS1 Dedicated Transport unbundling will be required between that wire center and any other wire center exceeding these same thresholds.

5.2.2.5 Once a wire center meets or exceeds either of the thresholds set forth in Section 5.2.2.2 above, no future DS3 Dedicated Transport will be required between that wire center and any other wire center meeting or exceeding these same thresholds.

5.2.2.6 Modifications and Updates to the Wire Center List and Subsequent Transition Periods

5.2.2.6.1 In the event AT&T identifies additional wire centers that meet the criteria set forth in Sections 5.2.2.1 or 5.2.2.2 above, but that were not included in the Master List of Unimpaired Wire Centers or AT&T's List of Unimpaired Wire Centers, AT&T shall include such additional wire centers in a CNL. Each such list of additional wire centers shall be considered a Subsequent Wire Center List. AT&T will follow any notification procedures set forth in applicable Commission orders.

5.2.2.6.2 Fast Phones shall have thirty (30) business days to dispute the additional wire centers listed on AT&T's CNL. Absent such dispute, effective thirty (30) business days after the date of an AT&T CNL providing a Subsequent Wire Center List, AT&T shall not be required to provide DS1 and DS3 Dedicated Transport, as applicable, in such additional wire center(s), except pursuant to the self-certification process as set forth in Section 1.8 of this Attachment.

5.2.2.6.3 For purposes of Section 5.2.2.6 above, AT&T shall make available DS1 and DS3 Dedicated Transport that were in service for Fast Phones in a wire center on the Subsequent Wire Center List as of the thirtieth (30th) business day after the date of AT&T's CNL identifying the Subsequent Wire Center List (Subsequent Embedded Base) until one hundred eighty (180) days after the thirtieth (30th) business day from the date of AT&T's CNL identifying the Subsequent Wire Center List (Subsequent Transition Period).

5.2.2.6.4 The rates set forth in Exhibit B shall apply to the Subsequent Embedded Base during the Subsequent Transition Period.

5.2.2.6.5 No later than one hundred eighty (180) days from AT&T's CNL identifying the Subsequent Wire Center List, Fast Phones shall submit an LSR(s) or spreadsheet(s) as applicable, identifying the Subsequent Embedded Base of circuits to be disconnected or converted to other AT&T services.

5.2.2.6.6 In the case of disconnection, the applicable disconnect charges set forth in this Agreement shall apply.

5.2.2.6.6.1 If Fast Phones fails to submit the LSR(s) or spreadsheet(s) for all of its Subsequent Embedded Base by one hundred eighty (180) days after the date of AT&T's CNL identifying the Subsequent Wire Center List, AT&T will identify Fast Phones's remaining Subsequent Embedded Base, if any, and will transition such circuits to the equivalent tariffed AT&T service(s), or in the case of Georgia, to the

equivalent 271 service(s) set forth in Exhibit 1. In the states of Florida, Mississippi and South Carolina, those circuits identified and transitioned by AT&T shall be subject to the applicable disconnect charges as set forth in this Agreement and the full nonrecurring charges for installation of the equivalent tariffed AT&T service as set forth in AT&T's tariffs. In the states of Alabama, Georgia and North Carolina, those circuits identified and transitioned by AT&T shall be subject to the applicable switch-as-is rates set forth in Exhibit A of Attachment 2. For the state of Louisiana, those circuits identified and transitioned by AT&T shall be subject to the applicable switch-as-is rates set forth in AT&T's tariffs.

5.2.2.6.7 For Subsequent Embedded Base circuits converted pursuant to Section 5.2.2.6.5 above or transitioned pursuant to Section 5.2.2.6.6.1 above, the applicable recurring tariff charges shall apply as of the earlier of the date each circuit is converted or transitioned, as applicable, or the first day after the end of the Subsequent Transition Period.

5.2.3 AT&T shall:

5.2.4 Provide Fast Phones exclusive use of Dedicated Transport to a particular customer or carrier;

5.2.5 Provide all technically feasible features, functions, and capabilities of Dedicated Transport as outlined within the technical requirements of this section;

5.2.6 Permit, to the extent technically feasible, Fast Phones to connect Dedicated Transport to equipment designated by Fast Phones, including but not limited to, Fast Phones's collocated facilities; and

5.2.7 Permit, to the extent technically feasible, Fast Phones to obtain the functionality provided by AT&T's digital cross-connect systems.

5.3 AT&T shall offer Dedicated Transport:

5.3.1 As capacity on a shared facility; and

5.3.2 As a circuit (i.e., DS0, DS1, DS3, STS-1) dedicated to Fast Phones.

5.4 Dedicated Transport may be provided over facilities such as optical fiber, copper twisted pair, and coaxial cable, and shall include transmission equipment such as line terminating equipment, amplifiers, and regenerators.

5.5 Fast Phones may obtain a maximum of twelve (12) unbundled DS3 Dedicated Transport circuits on each Route where DS3 Dedicated Transport is available as a Network Element, and a maximum of ten (10) unbundled DS1 Dedicated Transport circuits on each Route where there is no 251(c)(3) unbundling obligation for DS3 Dedicated Transport, but for which impairment exists for DS1

Dedicated Transport. For purposes of this Section 5, a "Route" is defined in 47 C.F.R. § 51.319 (e) as a transmission path between one of an incumbent LEC's wire centers or switches and another of the incumbent LECs wire centers or switches. A route between two (2) points (e.g. wire center or switch "A" and wire center or switch "Z") may pass through one or more intermediate wire centers or switches (e.g. wire center or switch "X"). Transmission paths between the same end points (e.g. wire center or switch "A" and wire center or switch "Z") are the same "route", irrespective of whether they pass through the same intermediate wire centers or switches, if any.

5.6 Technical Requirements

5.6.1 AT&T shall offer DS0 equivalent interface transmission rates for DS0 or voice grade Dedicated Transport. For DS1 or DS3 circuits, Dedicated Transport shall at a minimum meet the performance, availability, jitter, and delay requirements specified for Customer Interface to Central Office (CI to CO) connections in the applicable industry standards.

5.6.2 AT&T shall offer the following interface transmission rates for Dedicated Transport:

5.6.2.1 DS0 Equivalent;

5.6.2.2 DS1;

5.6.2.3 DS3;

5.6.2.4 STS-1; and

5.6.2.5 SDH (Synchronous Digital Hierarchy) Standard interface rates are in accordance with International Telecommunications Union (ITU) Recommendation G.707 and Plesiochronous Digital Hierarchy (PDH) rates per ITU Recommendation G.704.

5.6.3 AT&T shall design Dedicated Transport according to its network infrastructure. Fast Phones shall specify the termination points for Dedicated Transport.

5.6.4 At a minimum, Dedicated Transport shall meet each of the requirements set forth in the applicable industry technical references and AT&T Technical References;

5.6.4.1 Telcordia TR-TSY-000191 Alarm Indication Signals Requirements and Objectives, Issue 1, May 1986.

5.6.4.2 AT&T's TR73501 LightGate®Service Interface and Performance Specifications, Issue D, June 1995.

5.6.4.3 AT&T's TR73525 MegaLink®Service, MegaLink Channel Service and MegaLink Plus Service Interface and Performance Specifications, Issue C, May 1996.

5.7 Unbundled Channelization (Multiplexing)

5.7.1 To the extent Fast Phones is purchasing DS1 or DS3 or STS-1 Dedicated Transport pursuant to this Agreement, Unbundled Channelization (UC) provides the optional multiplexing capability that will allow a DS1 (1.544 Mbps) or DS3 (44.736 Mbps) or STS-1 (51.84 Mbps) Network Elements to be multiplexed or channelized at an AT&T central office. Channelization can be accomplished through the use of a multiplexer or a digital cross-connect system at the discretion of AT&T. Once UC has been installed, Fast Phones may request channel activation on a channelized facility and AT&T shall connect the requested facilities via COCIs. The COCI must be compatible with the lower capacity facility and ordered with the lower capacity facility. This service is available as defined in NECA 4.

5.7.2 AT&T shall make available the following channelization systems and interfaces:

5.7.2.1 DS1 Channelization System: channelizes a DS1 signal into a maximum of twenty-four (24) DS0s. The following COCI are available: Voice Grade, Digital Data and ISDN.

5.7.2.2 DS3 Channelization System: channelizes a DS3 signal into a maximum of twenty-eight (28) DS1s. A DS1 COCI is available with this system.

5.7.2.3 STS-1 Channelization System: channelizes a STS-1 signal into a maximum of twenty-eight (28) DS1s. A DS1 COCI is available with this system.

5.7.3 Technical Requirements. In order to assure proper operation with AT&T provided central office multiplexing functionality, Fast Phones's channelization equipment must adhere strictly to form and protocol standards. Fast Phones must also adhere to such applicable industry standards for the multiplex channel bank, for voice frequency encoding, for various signaling schemes, and for sub rate digital access.

5.8 Dark Fiber Transport. Dark Fiber Transport is defined as Dedicated Transport that consists of unactivated optical interoffice transmission facilities without attached signal regeneration, multiplexing, aggregation or other electronics.

5.8.1 Dark Fiber Transport Requirements

5.8.1.1 For purposes of this Section 5.8, a Business Line is as defined in 47 C.F.R. § 51.5.

5.8.1.2 Notwithstanding anything to the contrary in this Agreement, AT&T shall make available Dark Fiber Transport as described in this Agreement, except in any wire center meeting the criteria described below:

5.8.1.2.1 Dark Fiber Transport where both wire centers at the end points of the route contain twenty-four thousand (24,000) or more Business Lines or three (3) or more fiber-based collocators.

5.8.1.3 The Master List of Unimpaired Wire Centers or AT&T's List of Unimpaired Wire Centers, as described in Section 1.8, sets forth the list of wire centers meeting the criteria set forth in Section 5.8.1.2.1 above as of March 11, 2005.

5.8.1.4 Once any wire center exceeds either of the thresholds set forth in Section 5.8.1.2.1 above, no future Dark Fiber Transport unbundling will be required in that wire center.

5.8.1.5 Modifications and Updates to the Wire Center List and Subsequent Transition Periods

5.8.1.5.1 In the event AT&T identifies additional wire centers that meet the criteria set forth in Section 5.8.1.2.1 above, but that were not included in the Master List of Unimpaired Wire Centers or AT&T's List of Unimpaired Wire Centers, AT&T shall include such additional wire centers in a CNL. Each such list of additional wire centers shall be considered a "Subsequent Wire Center List". AT&T will follow any notification procedures in applicable Commission orders.

5.8.1.5.2 Fast Phones shall have thirty (30) business days to dispute the additional wire centers listed on AT&T's CNL. Absent such dispute, effective thirty (30) business days after the date of an AT&T CNL providing a Subsequent Wire Center List, AT&T shall not be required to provide unbundled access to Dark Fiber Transport, as applicable, in such additional wire center(s), except pursuant to the self-certification process as set forth in Section 1.8 of this Attachment.

5.8.1.5.3 For purposes of Section 5.8.1.5 above, AT&T shall make available Dark Fiber Transport that was in service for Fast Phones in a wire center on the Subsequent Wire Center List as of the thirtieth (30) business day after the date of AT&T's CNL identifying the Subsequent Wire Center List (Subsequent Embedded Base) until one hundred eighty (180) days after the thirtieth (30th) business day from the date of AT&T's CNL identifying the Subsequent Wire Center List (Subsequent Transition Period).

5.8.1.5.4 The rates set forth in Exhibit B shall apply to the Subsequent Embedded Base during the Subsequent Transition Period.

5.8.1.5.5 No later than one hundred eighty (180) days from AT&T's CNL identifying the Subsequent Wire Center List, Fast Phones shall submit an LSR(s) or spreadsheet(s) as applicable, identifying the Subsequent Embedded Base of circuits to be disconnected or converted to other AT&T services.

5.8.1.5.6 In the case of disconnection, the applicable disconnect charges set forth in this Agreement shall apply.

5.8.1.5.6.1 If Fast Phones fails to submit the LSR(s) or spreadsheet(s) for all of its Subsequent Embedded Base by one hundred eighty (180) days after the date of AT&T's CNL identifying the Subsequent Wire Center List, AT&T will identify Fast Phones's remaining Subsequent Embedded Base, if any, and will transition such circuits to the equivalent tariffed AT&T service(s), or in the case of Georgia, to the equivalent 271 service set forth in Exhibit 1.

5.8.1.5.6.2 In the states of Florida, Mississippi and South Carolina, those circuits identified and transitioned by AT&T shall be subject to the applicable disconnect charges as set forth in this Agreement and the full nonrecurring charges for installation of the equivalent tariffed AT&T service as set forth in AT&T's tariffs. In the states of Alabama, Georgia and South Carolina, those circuits identified and transitioned by AT&T shall be subject to the applicable switch-as-is rates set forth in Exhibit A of Attachment 2. In the state of Louisiana, those circuits identified and transitioned by AT&T shall be subject to the full nonrecurring charges for installation of the equivalent tariffed AT&T service as set forth in AT&T's tariffs.

5.8.1.5.6.3 For Subsequent Embedded Base circuits converted pursuant to Section 5.8.1.5.5 above or transitioned pursuant to Section 5.8.1.5.6.1 above, the applicable recurring tariff charges shall apply as of the earlier of the date each circuit is converted or transitioned, as applicable, or the first day after the end of the Subsequent Transition Period.

5.9 <u>Rearrangements</u>

5.9.1 A request to move a working Fast Phones Dedicated Transport circuit or a Combination including Dedicated Transport from one connecting facility assignment (CFA) to another CFA in the same AT&T Central Office (Change in CFA), shall not constitute the establishment of new service. The applicable Rearrangement rates for the Change in CFA are set forth in Exhibit A.

5.9.2 A request to reterminate one end of a Dedicated Transport facility that is not a Change in CFA and thus results in retermination in a different AT&T Central Office (Retermination) shall constitute disconnection of existing service and the establishment of new service. Disconnect charges and full nonrecurring charges for establishment of service, as set forth in Exhibit A, shall apply.

5.9.3 Upon request of Fast Phones, AT&T shall project manage the Change in CFA or Retermination of Dedicated Transport and Combinations that include Dedicated Transport as described in Sections 5.9.1 and 5.9.2 above and Fast Phones may request OC-TS for such orders.

5.9.4 AT&T shall accept a LOA between Fast Phones and another carrier that will allow Fast Phones, in connection with a Change in CFA or Retermination, to connect Dedicated Transport or a Combination that includes Dedicated Transport, via a CFA, to the other carrier's collocation space or to another carrier's Multiplexer.

6 Automatic Location Identification/Data Management System (ALI/DMS)

6.1 911 and E911 Databases

6.1.1 AT&T shall provide Fast Phones with nondiscriminatory access to 911 and E911 databases on an unbundled basis, in accordance with 47 C.F.R. § 51.319 (f).

6.1.2 The ALI/DMS database contains end user information (including name, address, telephone information, and sometimes special information from the local service provider or end user) used to determine to which PSAP to route the call. The ALI/DMS database is used to provide enhanced routing flexibility for E911. Fast Phones will be required to provide the AT&T 911 database vendor daily service order updates to E911 database in accordance with Section 6.2.1 below.

6.2 Technical Requirements

6.2.1 AT&T's 911 database vendor shall provide Fast Phones the capability of providing updates to the ALI/DMS database through a specified electronic interface. Fast Phones shall contact AT&T's 911 database vendor directly to request interface. Fast Phones shall provide updates directly to AT&T's 911 database vendor on a daily basis. Updates shall be the responsibility of Fast Phones and AT&T shall not be liable for the transactions between Fast Phones and AT&T's 911 database vendor.

6.2.2 It is Fast Phones's responsibility to retrieve and confirm statistical data and to correct errors obtained from AT&T's 911 database vendor on a daily basis. All errors will be assigned a unique error code and the description of the error and the corrective action is described in the CLEC Users Guide for Facility Based Providers that is found on the AT&T Interconnection Web site.

6.2.3 Fast Phones shall conform to the AT&T standards as described in the CLEC Users Guide to E911 for Facilities Based Providers that is located on the AT&T Interconnection Web site.

6.2.4 Stranded Unlocks are defined as end user records in AT&T's ALI/DMS database that have not been migrated for over ninety (90) days to Fast Phones, as a new provider of local service to the end user. Stranded Unlocks are those end user records that have been "unlocked" by the previous local exchange carrier that provided service to the end user and are open for Fast Phones to assume responsibility for such records.

6.2.4.1 Based upon end user record ownership information available in the NPAC database, AT&T shall provide a Stranded Unlock annual report to Fast Phones that reflects all Stranded Unlocks that remain in the ALI/DMS database for over ninety (90) days. Fast Phones shall review the Stranded Unlock report, identify its end user records and request to either delete such records or migrate the records to Fast Phones within two (2) months following the date of the Stranded Unlock report provided by AT&T. Fast Phones shall reimburse AT&T for any charges AT&T's database vendor imposes on AT&T for the deletion of Fast Phones's records.

6.3 911 PBX Locate Service®. 911 PBX Locate Service is comprised of a database capability and a separate transport component.

6.3.1 Description of Product. The transport component provides a dedicated trunk path from a Private Branch Exchange (PBX) switch to the appropriate AT&T 911 tandem.

6.3.1.1 The database capability allows Fast Phones to offer an E911 service to its PBX end users that identifies to the PSAP the physical location of the Fast Phones PBX 911 end user station telephone number for the 911 call that is placed by the end user.

6.3.2 Fast Phones may order either the database capability or the transport component as desired or Fast Phones may order both components of the service.

6.3.3 911 PBX Locate Database Capability. Fast Phones's end user or Fast Phones's end user's database management agent (DMA) must provide the end user PBX station telephone numbers and corresponding address and location data to AT&T's 911 database vendor. The data will be loaded and maintained in AT&T's ALI database.

6.3.4 Ordering, provisioning, testing and maintenance shall be provided by Fast Phones pursuant to the 911 PBX Locate Marketing Service Description (MSD) that is located on the AT&T Interconnection Web site.

6.3.5 Fast Phones's end user, or Fast Phones's end user DMA must provide ongoing updates to AT&T's 911 database vendor within a commercially reasonable timeframe of all PBX station telephone number adds, moves and deletions. It will

be the responsibility of Fast Phones to ensure that the end user or DMA maintain the data pertaining to each end user's extension managed by the 911 PBX Locate Service product. Fast Phones should not submit telephone number updates for specific PBX station telephone numbers that are submitted by Fast Phones's end user, or Fast Phones's end user DMA under the terms of 911 PBX Locate product.

6.3.5.1 Fast Phones must provision all PBX station numbers in the same LATA as the E911 tandem.

6.3.6 Fast Phones agrees to release, indemnify, defend and hold harmless AT&T from any and all loss, claims, demands, suits, or other action, or any liability whatsoever, whether suffered, made, instituted or asserted by Fast Phones's end user or by any other party or person, for any personal injury to or death of any person or persons, or for any loss, damage or destruction of any property, whether owned by Fast Phones or others, or for any infringement or invasion of the right of privacy of any person or persons, caused or claimed to have been caused, directly or indirectly, by the installation, operation, failure to operate, maintenance, removal, presence, condition, location or use of PBX Locate Service features or by any services which are or may be furnished by AT&T in connection therewith, including but not limited to the identification of the telephone number, address or name associated with the telephone used by the party or parties accessing 911 services using 911 PBX Locate Service hereunder, except to the extent caused by AT&T's gross negligence or wilful misconduct. Fast Phones is responsible for assuring that its authorized end users comply with the provisions of these terms and that unauthorized persons do not gain access to or use the 911 PBX Locate Service through user names, passwords, or other identifiers assigned to Fast Phones's end user or DMA pursuant to these terms. Specifically, Fast Phones's end user or DMA must keep and protect from use by any unauthorized individual identifiers, passwords, and any other security token(s) and devices that are provided for access to this product.

6.3.7 Fast Phones may only use AT&T PBX Locate Service solely for the purpose of validating and correcting 911 related data for Fast Phones's end users' telephone numbers for which it has direct management authority.

6.3.8 <u>911 PBX Locate Transport Component.</u> The 911 PBX Locate Service transport component requires Fast Phones to order a CAMA type dedicated trunk from Fast Phones's end user premise to the appropriate AT&T 911 tandem pursuant to the following provisions.

6.3.8.1 Except as otherwise set forth below, a minimum of two (2) end user specific, dedicated 911 trunks are required between the Fast Phones's end user premise and the AT&T 911 tandem as described in AT&T's TR 73576 and in accordance with the 911 PBX Locate Marketing Service Description located on the AT&T

Interconnection Web site. Fast Phones is responsible for connectivity between the end user's PBX and Fast Phones's switch or POP location. Fast Phones will then order 911 trunks from their switch or POP location to the AT&T 911 tandem. The dedicated trunks shall be, at a minimum, DS0 level trunks configured as part of a digital interface (delivered over a Fast Phones purchased DS1 facility that hands off at a DS1 or higher level digital or optical interface). Fast Phones is responsible for ensuring that the PBX switch is capable of sending the calling station's Direct Inward Dial (DID) telephone number to the AT&T 911 tandem in a specified Multi-frequency (MF) Address Signaling Protocol. If the PBX switch supports Primary Rate ISDN (PRI) and the calling stations are DID numbers, then the 911 call can be transmitted using PRI, and there will be no requirement for the PBX Locate Transport component.

6.3.9 Ordering and Provisioning. Fast Phones will submit an Access Service Request (ASR) to AT&T to order a minimum of two (2) end user specific 911 trunks from its switch or POP location to the AT&T 911 tandem.

6.3.9.1 Testing and maintenance shall be provided by Fast Phones pursuant to the 911 PBX Locate Marketing Service description that is located on the AT&T Interconnection Web site.

6.3.10 Rates. Rates for the 911 PBX Locate Service database component are set forth in Exhibit A. Trunks and facilities for 911 PBX Locate transport component may be ordered by Fast Phones pursuant to the terms and conditions set forth in Attachment 3.

7 White Pages Listings

7.1 AT&T shall provide Fast Phones and its customers access to white pages directory listings under the following terms:

7.1.1 Listings. Fast Phones shall provide all new, changed and deleted listings on a timely basis and AT&T or its agent will include Fast Phones residential and business customer listings in the appropriate White Pages (residential and business) or alphabetical directories in the geographic areas covered by this Agreement. Directory listings will make no distinction between Fast Phones and AT&T customers. Fast Phones shall provide listing information in accordance with the procedures set forth in The AT&T Business Rules for Local Ordering found at AT&T's Interconnection Services Web site.

7.1.2 Unlisted/Non-Published Customers. Fast Phones will be required to provide to AT&T the names, addresses and telephone numbers of all Fast Phones customers who wish to be omitted from directories. Unlisted/Non-Published listings will be subject to the rates as set forth in AT&T's GSST and shall not be subject to wholesale discount.

7.1.3 Inclusion of Fast Phones Customers in Directory Assistance Database. AT&T will include and maintain Fast Phones customer listings in AT&T's DA databases. Fast Phones shall provide such Directory Assistance listings to AT&T at no charge.

7.1.4 Listing Information Confidentiality. AT&T will afford Fast Phones's directory listing information the same level of confidentiality that AT&T affords its own directory listing information.

7.1.5 Additional and Designer Listings. Additional and designer listings will be offered by AT&T at tariffed rates as set forth in AT&T's GSST and shall not be subject to the wholesale discount.

7.1.6 Rates. So long as Fast Phones provides listing information to AT&T as set forth in Section 7.1.2 above, AT&T shall provide to Fast Phones one (1) basic White Pages directory listing per Fast Phones customer at no charge other than applicable service order charges as set forth in AT&T's tariffs. Except in the case of a LSR submitted solely to port a number from AT&T, if such listing is requested on the initial LSR associated with the request for services, a single manual service order charge or electronic service order charge, as appropriate, as described in Attachment 6, will apply to both the request for service and the request for the directory listing. Where a subsequent LSR is placed solely to request a directory listing, or is placed to port a number and request a directory listing, separate service order charges as set forth in AT&T's tariffs shall apply, as well as the manual service order charge or the electronic service order charge, as appropriate, as described in Attachment 6.

7.2 Directories. AT&T or its agent shall make available White Pages directories to Fast Phones customer at no charge or as specified in a separate agreement between Fast Phones and AT&T's agent.

7.3 Procedures for submitting Fast Phones Subscriber Listing Information (SLI) are found in The AT&T Business Rules for Local Ordering found at AT&T's Interconnection Services Web site.

7.3.1 Fast Phones authorizes AT&T to release all Fast Phones SLI provided to AT&T by Fast Phones to qualifying third parties. Such Fast Phones SLI shall be intermingled with AT&T's own customer listings and listings of any other CLEC that has authorized a similar release of SLI.

7.3.2 No compensation shall be paid to Fast Phones for AT&T's receipt of Fast Phones SLI, or for the subsequent release to third parties of such SLI. In addition, to the extent AT&T incurs costs to modify its systems to enable the release of Fast Phones's SLI, or costs on an ongoing basis to administer the release of Fast Phones SLI, Fast Phones shall pay to AT&T its proportionate share of the reasonable costs associated therewith. At any time that costs may be incurred to

administer the release of Fast Phones's SLI, Fast Phones will be notified. If Fast Phones does not wish to pay its proportionate share of these reasonable costs, Fast Phones may instruct AT&T that it does not wish to release its SLI to independent publishers, and Fast Phones shall amend this Agreement accordingly. Fast Phones will be liable for all costs incurred until the effective date of the agreement.

7.3.3 Neither AT&T nor any agent shall be liable for the content or accuracy of any SLI provided by Fast Phones under this Agreement. Fast Phones shall indemnify, except to the extent caused by AT&T's gross negligence or willful misconduct, hold harmless and defend AT&T and its agents from and against any damages, losses, liabilities, demands, claims, suits, judgments, costs and expenses (including but not limited to reasonable attorneys' fees and expenses) arising from AT&T's tariff obligations or otherwise and resulting from or arising out of any third party's claim of inaccurate Fast Phones listings or use of the SLI provided pursuant to this Agreement. AT&T may forward to Fast Phones any complaints received by AT&T relating to the accuracy or quality of Fast Phones listings.

7.3.4 Listings and subsequent updates will be released consistent with AT&T system changes and/or update scheduling requirements.

Georgia 271 Requirements

1. This Exhibit sets forth terms and conditions for de-listed network elements that AT&T is required to offer pursuant to the Georgia Public Service Commission's Order in Docket No. 19341-U ("Order") to Fast Phones for Fast Phones's provision of Telecommunications Services in accordance with its obligations under Section 271 of the Act ("271").

1.1 To the extent DS1 and/or DS3 Loops, DS1 and/or DS3 Dedicated Transport and Multiplexing are unavailable as a UNE pursuant to this Agreement, these services will be made available by AT&T pursuant to Section 271 of the Act on the same terms and conditions set forth elsewhere in the Agreement, except as otherwise provided in this Exhibit 1, and at the rates set forth in Exhibit B to this Agreement. Notwithstanding the foregoing, the Parties agree that those provisions applicable to DS1 and DS3 Loops or DS1 and DS3 transport provided pursuant to Section 251 of the Act relating to transition of Embedded Base circuits, limitations on the number of circuits available at a particular location or Building, and limitations relating to use for mobile and long distance service shall not apply to the equivalent services available pursuant to this Exhibit 1.

1.2 For information regarding Ordering Guidelines and Processes for 271 elements in the state of Georgia, Fast Phones should refer to the Guides section of AT&T's Interconnection Web site.

2. 271 Dark Fiber Loops, 271 DS1 and DS3 Entrance Facilities, and 271 Dark Fiber Transport Facilities are unavailable pursuant to this Agreement and, but are available at the rates, terms, and conditions set forth in the applicable AT&T tariff.

2.1 Under no circumstance shall AT&T be required to (1) combine 271 elements with other 271 elements offered pursuant to this Exhibit, or (2) 271 elements combined with tariffed services or other wholesale services provided by AT&T. Additionally, AT&T shall not be required to commingle or combine 271 elements offered pursuant to this Exhibit with tariffed services. Further, under no circumstance shall AT&T be required to convert 271 elements offered pursuant to this Agreement to equivalent tariffed services, or to convert tariffed services to 271 elements offered pursuant to this Agreement.

3. Line Sharing

3.1 General. Line Sharing is defined as the process by which Fast Phones provides digital subscriber line service ("xDSL") over the same copper Loop that AT&T uses to provide retail voice service, with AT&T using the low frequency portion of the Loop and Fast Phones using the high frequency spectrum (as defined below) of the Loop.

3.2 Line Sharing arrangements in service as of October 1, 2003 will be billed at the rates set forth in the Parties' Amendment to the Agreement to implement the Georgia Public Service Commission's Letter Order dated March 2, 2006 in Docket No. 14361-U.

3.3 For Line Sharing arrangements placed in service between October 2, 2003, and October 1, 2004 the rates will be as set forth in the Parties' Amendment to the Agreement to implement the Georgia Public Service Commission's Letter Order dated March 2, 2006 in Docket No. 14361-U.

3.4 For Line Sharing arrangements placed on or after October 2, 2004 (whether under this Agreement only, or under this Agreement and a prior Agreement), the rates will be the full copper loop rate as set forth in the Parties' Amendment to the Agreement to implement the Georgia Public Service Commission's Letter Order dated March 2, 2006 in Docket No. 14361-U.

3.5 As of October 2, 2006, the rates for Line Sharing arrangements shall be as set forth in Exhibit B to this Amendment.

3.6 The High Frequency Spectrum is defined as the frequency range above the voiceband on a copper Loop facility carrying analog circuit-switched voiceband transmissions. Access to the High Frequency Spectrum is intended to allow Fast Phones the ability to provide xDSL data services to the End User for which AT&T provides voice services.

3.7 The High Frequency Spectrum shall be available for any version of xDSL complying with Spectrum Management Class 5 of ANSI TI.417, American National Standard for Telecommunications, Spectrum Management for Loop Transmission Systems. AT&T will continue to have access to the low frequency portion of the Loop spectrum (from 300 Hertz to at least 3000 Hertz, and potentially up to 3400 Hertz, depending on equipment and facilities) for the purposes of providing voice service. Fast Phones shall only use xDSL technology that is within the PSD mask for Spectrum Management Class 5 as found in the abovementioned document.

3.8 Access to the High Frequency Spectrum requires an unloaded, 2-wire copper Loop. An unloaded Loop is a copper Loop with no load coils, lowpass filters, range extenders, DAMLs, or similar devices and minimal bridged taps consistent with ANSI T1.413 and TI .601.

3.9 AT&T will provide Loop Modification to Fast Phones on an existing Loop for Line Sharing in accordance with procedures as specified in Attachment 2 of this Agreement. AT&T is not required to modify a Loop for access to the High Frequency spectrum if modification of that Loop significantly degrades AT&T's voice service. If Fast Phones requests that AT&T modify a Loop and such modification significantly degrades the voice services on the Loop, Fast Phones shall pay for the Loop to be restored to its original state.

3.10 Line Sharing shall only be available on Loops on which AT&T is also providing, and continues to provide, analog voice service directly to the End User. In the event the End User terminates its AT&T provided voice service for any reason, or in the event AT&T disconnects the End User's voice service pursuant to its tariffs or applicable law, and Fast Phones desires to continue providing xDSL service on such Loop, Fast Phones or the new voice provider, or both, shall be required to purchase a full stand-alone Loop. In those cases in which AT&T no longer provides voice service to the End User and Fast Phones purchases the full stand-alone Loop, Fast Phones may elect the type of Loop it will purchase. Fast Phones will pay the appropriate recurring and nonrecurring rates for such Loop as set forth in the Parties' Amendment to the Agreement to implement the Georgia Public Service Commission's Letter Order dated March 2, 2006 in Docket No. 14361-U. In the event Fast Phones purchases a voice grade Loop, Fast Phones acknowledges that such Loop may not remain xDSL compatible.

3.11 Only one CLEC shall be permitted access to the High Frequency Spectrum of any particular Loop.

3.12 <u>Provisioning of Line Sharing and Splitter Space.</u> AT&T will provide Fast Phones with access to the High Frequency Spectrum as follows:

3.12.1 To order High Frequency Spectrum on a particular Loop, Fast Phones must have a Digital Subscriber Line Access Multiplexer (DSLAM) collocated in the central office that serves the End User of such Loop.

3.12.2 Fast Phones may provide its own splitters or may order splitters in a central office once it has installed its DSLAM in that central office. AT&T will install splitters within thirty-six (36) calendar days of Fast

Phones's submission of an error free Line Splitter Ordering Document (LSOD) to the AT&T Complex Resale Support Group.

3.12.3 Once a splitter is installed on behalf of Fast Phones in a central office in which Fast Phones is located, Fast Phones shall be entitled to order the High Frequency Spectrum on lines served out of that central office. AT&T will bill and Fast Phones shall pay the electronic or manual ordering charges, as set forth in Exhibit A of Attachment 2 of the Agreement, as applicable when Fast Phones orders High Frequency Spectrum for End User service.

3.12.4 Once AT&T has placed cross-connects on behalf of Fast Phones to provide Fast Phones access to the High Frequency Spectrum and chooses to rearrange its splitter or CLEC pairs, Fast Phones may order the rearrangement of its splitter or cable pairs via "Subsequent Activity". Subsequent Activity is any rearrangement of Fast Phones's cable pairs or splitter ports after AT&T has placed cross-connection to provide Fast Phones access to the High Frequency Spectrum. AT&T shall bill and Fast Phones shall pay the Subsequent Activity charges as set forth in Exhibit B of this Amendment.

3.13 <u>AT&T Provided Splitter – Line Sharing.</u> AT&T will select, purchase, install, and maintain a central office POTS splitter and provide Fast Phones access to data ports on the splitter. The splitter will route the High Frequency Spectrum on the circuit to Fast Phones's xDSL equipment in Fast Phones's collocation space. At least thirty (30) calendar days before making a change in splitter suppliers, AT&T will provide Fast Phones with a carrier notification letter, informing Fast Phones of change. Fast Phones shall purchase ports on the splitter in increments of eight (8), twenty-four (24), or ninety-six (96) ports.

3.14 AT&T will install the splitter in (i) a common area close to Fast Phones's collocation area, if possible; or (ii) in a AT&T relay rack as close to Fast Phones's DS0 termination point as possible. For purposes of this section, a common area is defined as an area in the central office in which both Parties have access to a common test access point. A Termination Point is defined as the point of termination for Fast Phones on the main distributing frame in the central office and is not the demarcation point set forth in Attachment 4 of this Agreement. AT&T will cross-connect the splitter data ports to a specified Fast Phones DS0 at such time that a Fast Phones End User's service is established.

3.15 <u>CLEC Provided Splitter – Line Sharing.</u> Fast Phones may at its option purchase, install and maintain central office POTS splitters in its collocation arrangements. Fast Phones may use such splitters to provide

xDSL services to its End Users using the High Frequency Spectrum. Existing Collocation rules and procedures and the terms and conditions relating to Collocation set forth in Attachment 4-Central Office shall apply.

3.16 Any splitters installed by Fast Phones in its collocation arrangement shall comply with ANSI T1.413, Annex E, or any future ANSI splitter Standards. Fast Phones may install any splitters that AT&T deploys or permits to be deployed for itself or any AT&T affiliate.

3.17 Ordering – Line Sharing. Fast Phones shall use AT&T's LSOD to order splitters from AT&T and to activate and deactivate DS0 Collocation Connecting Facility Assignments (CFA) for use with High Frequency Spectrum.

3.18 AT&T's Local Ordering Handbook (LOH) will provide Fast Phones the LSR format to be used when ordering disconnections of the High Frequency Spectrum or Subsequent Activity.

3.19 AT&T will provision High Frequency Spectrum in compliance with AT&T's Products and Services Interval Guide available at AT&T's Interconnection Web site.

3.20 AT&T shall test the data portion of the Loop to ensure the continuity of the wiring for Fast Phones's data.

3.21 AT&T will provide Fast Phones access to Preordering LMU in accordance with the terms of this Agreement. AT&T shall bill and Fast Phones shall pay the rates for such services, as described in Exhibit B of this Amendment.

3.22 Maintenance and Repair - Line Sharing. Fast Phones shall have access for repair and maintenance purposes to any Loop for which it has access to the High Frequency Spectrum. Fast Phones may test from the collocation space, the Termination Point, or the NID. AT&T will be responsible for repairing voice services and the physical line between the NID at the End User's premises and the Termination Point. Fast Phones will be responsible for repairing its data services. Each Party will be responsible for maintaining its own equipment.

3.23 Fast Phones shall inform its End Users to direct data problems to Fast Phones, unless both voice and data services are impaired, in which event Fast Phones should direct the End Users to contact AT&T. Once a Party has isolated a trouble to the other Party's portion of the Loop, the Party

isolating the trouble shall notify the End User that the trouble is on the other Party's portion of the Loop.

3.24 If Fast Phones reports a trouble on the High Frequency Spectrum of a Loop and no trouble actually exists on the AT&T portion, or AT&T isolates the trouble to the physical collocation arrangement belonging to Fast Phones, AT&T will charge Fast Phones for any dispatching and testing (both inside and outside the CO) required by AT&T in order to confirm the working status. The rates charged for no trouble found (NTF) shall be as set forth in Exhibit B of this Amendment.

UNBUNDLED NETWORK ELEMENTS - South Carolina

Att: 2 Exh: A

CATEGORY	RATE ELEMENTS	Interim	Zone	BCS	USOC	RATES($) Rec	Nonrecurring First	Nonrecurring Add'l	Nonrecurring Disconnect First	Nonrecurring Disconnect Add'l	Svc Order Submitted Elec per LSR	Svc Order Submitted Manually per LSR	Incremental Charge - Manual Svc Order vs. Electronic- 1st	Incremental Charge - Manual Svc Order vs. Electronic- Add'l	Incremental Charge - Manual Svc Order vs. Electronic- Disc 1st	Incremental Charge - Manual Svc Order vs. Electronic- Disc Add'l
											OSS Rates($)					
											SOMEC	SOMAN	SOMAN	SOMAN	SOMAN	SOMAN
	The "Zone" shown in the sections for stand-alone loops or loops as part of a combination refers to Geographically Deaveraged UNE Zones. To view Geographically Deaveraged UNE Zone Designations by Central Office, refer to internet Website: http://www.interconnection.bellsouth.com/become_a_clec/html/interconnection.htm															
OPERATIONS SUPPORT SYSTEMS (OSS) - "REGIONAL RATES"																
	NOTE: (1) CLEC should contact its contract negotiator if it prefers the "state specific" OSS charges as ordered by the State Commissions. The OSS charges currently contained in this rate exhibit are the AT&T "regional" service ordering charges. CLEC may elect either the state specific Commission ordered rates for the service ordering charges, or CLEC may elect the regional service ordering charge, however, CLEC can not obtain a mixture of the two regardless if CLEC has a interconnection contract established in each of the 9 states.															
	NOTE: (2) Any element that can be ordered electronically will be billed according to the SOMEC rate listed in this category. Please refer to AT&T's Local Ordering Handbook (LOH) to determine if a product can be ordered electronically. For those elements that cannot be ordered electronically at present per the LOH, the listed SOMEC rate in this category reflects the charge that would be billed to a CLEC once electronic ordering capabilities come on-line for that element. Otherwise, the manual ordering charge, SOMAN, will be applied to a CLECs bill when it submits an LSR to AT&T.															
	OSS - Electronic Service Order Charge, Per Local Service Request (LSR) - UNE Only				SOMEC		3.50	0.00	3.50	0.00						
	OSS - Manual Service Order Charge, Per Local Service Request (LSR) - UNE Only				SOMAN		15.69	0.00	1.97	0.00						
UNE SERVICE DATE ADVANCEMENT CHARGE																
	NOTE: The Expedite charge will be maintained commensurate with BellSouth's FCC No.1 Tariff, Section 5 as applicable.															
	UNE Expedite Charge per Circuit or Line Assignable USOC, per Day			UAL, UEANL, UCL, UEF, UDF, UEQ, UDL, UENTW, UDN, UEA, UHL, ULC, USL, U1T12, U1T48, U1TD1, U1TD3, U1TDX, U1TO3, U1TS1, U1TVX, UC1BC, UC1BL, UC1CC, UC1CL, UC1DC, UC1DL, UC1EC, UC1EL, UC1FC, UC1FL, UC1GC, UC1GL, UC1HC, UC1HL, UDL12, UDL48, UDLO3, UDLSX, UE3, ULD12, ULD48, ULDD1, ULDD3, ULDDX, ULDO3, ULDS1, ULDVX, UNC1X, UNC3X, UNCDX, UNCNX, UNCSX, UNCVX, UNLD1, UNLD3, UXTD1, UXTD3, UXTS1, U1TUC, U1TUD, U1TUB, U1TUA,NTCVG, NTCUD, NTCD1	SDASP		200.00									
ORDER MODIFICATION CHARGE																
	Order Modification Charge (OMC)						26.21	0.00	0.00	0.00						
	Order Modification Additional Dispatch Charge (OMCAD)						150.00	0.00	0.00	0.00						
UNBUNDLED EXCHANGE ACCESS LOOP																
	2-WIRE ANALOG VOICE GRADE LOOP															
	2-Wire Analog Voice Grade Loop - Service Level 1- Zone 1		1	UEANL	UEAL2	14.94	37.92	17.62	23.56	5.32						
	2-Wire Analog Voice Grade Loop - Service Level 1- Zone 2		2	UEANL	UEAL2	21.39	37.92	17.62	23.56	5.32						
	2-Wire Analog Voice Grade Loop - Service Level 1- Zone 3		3	UEANL	UEAL2	26.72	37.92	17.62	23.56	5.32						
	2-Wire Analog Voice Grade Loop - Service Level 1- Zone 1		1	UEANL	UEASL	14.94	37.92	17.62	23.56	5.32						
	2-Wire Analog Voice Grade Loop - Service Level 1- Zone 2		2	UEANL	UEASL	21.39	37.92	17.62	23.56	5.32						
	2-Wire Analog Voice Grade Loop - Service Level 1- Zone 3		3	UEANL	UEASL	26.72	37.92	17.62	23.56	5.32						
	Tag Loop at End User Premise			UEANL	URETL		8.95	0.88								
	Loop Testing - Basic 1st Half Hour			UEANL	URET1		34.23	0.00								
	Loop Testing - Basic Additional Half Hour			UEANL	URETA		19.90	19.90								
	Manual Order Coordination for UVL-SL1s (per loop)			UEANL	UEAMC		8.17	8.17								
	Order Coordination for Specified Conversion Time for UVL-SL1 (per LSR)			UEANL	OCOSL		18.13	18.13								

UNBUNDLED NETWORK ELEMENTS - South Carolina																	Att: 2 Exh: A
CATEGORY		RATE ELEMENTS	Interim	Zone	BCS	USOC	RATES($)					Svc Order Submitted Elec per LSR	Svc Order Submitted Manually per LSR	Incremental Charge - Manual Svc Order vs. Electronic-1st	Incremental Charge - Manual Svc Order vs. Electronic-Add'l	Incremental Charge - Manual Svc Order vs. Electronic-Disc 1st	Incremental Charge - Manual Svc Order vs. Electronic-Disc Add'l
							Rec	Nonrecurring		Nonrecurring Disconnect		OSS Rates($)					
								First	Add'l	First	Add'l	SOMEC	SOMAN	SOMAN	SOMAN	SOMAN	SOMAN
		Unbundled Non-Design Voice Loop, billing for AT&T providing make-up (Engineering Information - E.I.)			UEANL	UEANM		13.47	13.47								
		Unbundled Loop Service Rearrangement, change in loop facility, per circuit			UEANL	UREWO		15.81	8.96	23.56	5.32						
		Bulk Migration, per 2 Wire Voice Loop-SL1			UEANL	UREPN		37.92	17.62	23.56	5.32						
		Bulk Migration Order Coordination, per 2 Wire Voice Loop-SL1			UEANL	UREPM		8.17	8.17								
	2-WIRE Unbundled COPPER LOOP																
		2-Wire Unbundled Copper Loop - Non-Designed Zone 1		1	UEQ	UEQ2X	12.94	36.40	16.10	22.66	4.42						
		2 Wire Unbundled Copper Loop - Non-Designed - Zone 2		2	UEQ	UEQ2X	14.51	36.40	16.10	22.66	4.42						
		2 Wire Unbundled Copper Loop - Non-Designed - Zone 3		3	UEQ	UEQ2X	15.02	36.40	16.10	22.66	4.42						
		Unbundled Miscellaneous Rate Element, Tag Loop at End User Premise			UEQ	URETL		8.95	0.88								
		Loop Testing - Basic 1st Half Hour			UEQ	URET1		34.23	0.00								
		Loop Testing - Basic Additional Half Hour			UEQ	URETA		19.90	19.90								
		Manual Order Coordination 2 Wire Unbundled Copper Loop - Non-Designed (per loop)			UEQ	USBMC		8.17	8.17								
		Unbundled Copper Loop - Non-Design billing for AT&T providing make-up (Engineering Information - E.I.)			UEQ	UEQMU		13.47	13.47								
		Unbundled Loop Service Rearrangement, change in loop facility, per circuit			UEQ	UREWO		14.30	7.45	22.66	4.42						
		Bulk Migration, per 2 Wire UCL-ND			UEQ	UREPN		36.40	16.10	22.66	4.42						
		Bulk Migration Order Coordination, per 2 Wire UCL-ND			UEQ	UREPM		8.17	8.17								
UNBUNDLED EXCHANGE ACCESS LOOP																	
	2-WIRE ANALOG VOICE GRADE LOOP																
		2-Wire Analog Voice Grade Loop - Service Level 2 w/Loop or Ground Start Signaling - Zone 1		1	UEA	UEAL2	16.68	105.98	68.43	53.05	10.61						
		2-Wire Analog Voice Grade Loop - Service Level 2 w/Loop or Ground Start Signaling - Zone 2		2	UEA	UEAL2	23.13	105.98	68.43	53.05	10.61						
		2-Wire Analog Voice Grade Loop - Service Level 2 w/Loop or Ground Start Signaling - Zone 3		3	UEA	UEAL2	28.46	105.98	68.43	53.05	10.61						
		2-Wire Analog Voice Grade Loop - Service Level 2 w/Reverse Battery Signaling - Zone 1		1	UEA	UEAR2	16.68	105.98	68.43	53.05	10.61						
		2-Wire Analog Voice Grade Loop - Service Level 2 w/Reverse Battery Signaling - Zone 2		2	UEA	UEAR2	23.13	105.98	68.43	53.05	10.61						
		2-Wire Analog Voice Grade Loop - Service Level 2 w/Reverse Battery Signaling - Zone 3		3	UEA	UEAR2	28.46	105.98	68.43	53.05	10.61						
		Switch-As-Is Conversion rate per UNE Loop, Single LSR, (per DS0)			UEA	URESL		24.88	3.51								
		Switch-As-Is Conversion rate per UNE Loop, Spreadsheet, (per DS0)			UEA	URESP		26.37	4.99								
		Unbundled Loop Service Rearrangement, change in loop facility, per circuit			UEA	UREWO		87.90	36.44								
		Loop Tagging - Service Level 2 (SL2)			UEA	URETL		11.24	1.10								
		Bulk Migration, per 2 Wire Voice Loop-SL2			UEA	UREPN		105.98	68.43								
		Bulk Migration Order Coordination, per 2 Wire Voice Loop-SL2			UEA	UREPM		0.00	0.00								
	4-WIRE ANALOG VOICE GRADE LOOP																
		4-Wire Analog Voice Grade Loop - Zone 1		1	UEA	UEAL4	32.59	132.38	94.83	59.35	14.61						
		4-Wire Analog Voice Grade Loop - Zone 2		2	UEA	UEAL4	43.89	132.38	94.83	59.35	14.61						
		4-Wire Analog Voice Grade Loop - Zone 3		3	UEA	UEAL4	43.38	132.38	94.83	59.35	14.61						
		Switch-As-Is Conversion rate per UNE Loop, Single LSR, (per DS0)			UEA	URESL		24.88	3.51								
		Switch-As-Is Conversion rate per UNE Loop, Spreadsheet, (per DS0)			UEA	URESP		26.37	4.99								
		Unbundled Loop Service Rearrangement, change in loop facility, per circuit			UEA	UREWO		87.90	36.44								
	2-WIRE ISDN DIGITAL GRADE LOOP																
		2-Wire ISDN Digital Grade Loop - Zone 1		1	UDN	U1L2X	25.21	117.58	80.03	53.05	10.61						
		2-Wire ISDN Digital Grade Loop - Zone 2		2	UDN	U1L2X	32.76	117.58	80.03	53.05	10.61						
		2-Wire ISDN Digital Grade Loop - Zone 3		3	UDN	U1L2X	37.70	117.58	80.03	53.05	10.61						
		Unbundled Loop Service Rearrangement, change in loop facility, per circuit			UDN	UREWO		91.82	44.25								
	2-WIRE ASYMMETRICAL DIGITAL SUBSCRIBER LINE (ADSL) COMPATIBLE LOOP																
		2 Wire Unbundled ADSL Loop including manual service inquiry & facility reservation - Zone 1		1	UAL	UAL2X	12.19	120.84	70.56	50.37	7.93						

UNBUNDLED NETWORK ELEMENTS - South Carolina

Att: 2 Exh: A

CATEGORY	RATE ELEMENTS	Interim	Zone	BCS	USOC	RATES($)					Svc Order Submitted Elec per LSR	Svc Order Submitted Manually per LSR	Incremental Charge - Manual Svc Order vs. Electronic-1st	Incremental Charge - Manual Svc Order vs. Electronic-Add'l	Incremental Charge - Manual Svc Order vs. Electronic-Disc 1st	Incremental Charge - Manual Svc Order vs. Electronic-Disc Add'l
						Rec	Nonrecurring		Nonrecurring Disconnect		OSS Rates($)					
							First	Add'l	First	Add'l	SOMEC	SOMAN	SOMAN	SOMAN	SOMAN	SOMAN
	2 Wire Unbundled ADSL Loop including manual service inquiry & facility reservation - Zone 2		2	UAL	UAL2X	13.71	120.84	70.56	50.37	7.93						
	2 Wire Unbundled ADSL Loop including manual service inquiry & facility reservation - Zone 3		3	UAL	UAL2X	14.14	120.84	70.56	50.37	7.93						
	2 Wire Unbundled ADSL Loop without manual service inquiry & facility reservaton - Zone 1		1	UAL	UAL2W	12.19	95.81	57.82	50.37	7.93						
	2 Wire Unbundled ADSL Loop without manual service inquiry & facility reservaton - Zone 2		2	UAL	UAL2W	13.71	95.81	57.82	50.37	7.93						
	2 Wire Unbundled ADSL Loop without manual service inquiry & facility reservaton - Zone 3		3	UAL	UAL2W	14.14	95.81	57.82	50.37	7.93						
	Unbundled Loop Service Rearrangement, change in loop facility, per circuit			UAL	UREWO		86.38	40.48								
	2-WIRE HIGH BIT RATE DIGITAL SUBSCRIBER LINE (HDSL) COMPATIBLE LOOP															
	2 Wire Unbundled HDSL Loop including manual service inquiry & facility reservation - Zone 1		1	UHL	UHL2X	9.58	129.52	79.24	50.37	7.93						
	2 Wire Unbundled HDSL Loop including manual service inquiry & facility reservation - Zone 2		2	UHL	UHL2X	10.92	129.52	79.24	50.37	7.93						
	2 Wire Unbundled HDSL Loop including manual service inquiry & facility reservation - Zone 3		3	UHL	UHL2X	11.40	129.52	79.24	50.37	7.93						
	2 Wire Unbundled HDSL Loop without manual service inquiry and facility reservation - Zone 1		1	UHL	UHL2W	9.58	104.49	66.50	50.37	7.93						
	2 Wire Unbundled HDSL Loop without manual service inquiry and facility reservation - Zone 2		2	UHL	UHL2W	10.92	104.49	66.50	50.37	7.93						
	2 Wire Unbundled HDSL Loop without manual service inquiry and facility reservation - Zone 3		3	UHL	UHL2W	11.40	104.49	66.50	50.37	7.93						
	Unbundled Loop Service Rearrangement, change in loop facility, per circuit			UHL	UREWO		86.32	40.48								
	4-WIRE HIGH BIT RATE DIGITAL SUBSCRIBER LINE (HDSL) COMPATIBLE LOOP															
	4 Wire Unbundled HDSL Loop including manual service inquiry and facility reservation - Zone 1		1	UHL	UHL4X	16.02	158.18	107.89	55.12	10.38						
	4-Wire Unbundled HDSL Loop including manual service inquiry and facility reservation - Zone 2		2	UHL	UHL4X	14.33	158.18	107.89	55.12	10.38						
	4-Wire Unbundled HDSL Loop including manual service inquiry and facility reservation - Zone 3		3	UHL	UHL4X	16.84	158.18	107.89	55.12	10.38						
	4-Wire Unbundled HDSL Loop without manual service inquiry and facility reservation - Zone 1		1	UHL	UHL4W	16.02	133.14	95.16	55.12	10.38						
	4-Wire Unbundled HDSL Loop without manual service inquiry and facility reservation - Zone 2		2	UHL	UHL4W	14.33	133.14	95.16	55.12	10.38						
	4-Wire Unbundled HDSL Loop without manual service inquiry and facility reservation - Zone 3		3	UHL	UHL4W	16.84	133.14	95.16	55.12	10.38						
	Unbundled Loop Service Rearrangement, change in loop facility, per circuit			UHL	UREWO		86.32	40.48								
	4-WIRE DS1 DIGITAL LOOP															
	4-Wire DS1 Digital Loop - Zone 1		1	USL	USLXX	79.51	253.03	157.89	44.80	11.73						
	4-Wire DS1 Digital Loop - Zone 2		2	USL	USLXX	136.00	253.03	157.89	44.80	11.73						
	4-Wire DS1 Digital Loop - Zone 3		3	USL	USLXX	229.15	253.03	157.89	44.80	11.73						
	Switch-As-Is Conversion rate per UNE Loop, Single LSR, (per DS1)			USL	URESL		24.88	3.51								
	Switch-As-Is Conversion rate per UNE Loop, Spreadsheet, (per DS1)			USL	URESP		26.37	4.99								
	Unbundled Loop Service Rearrangement, change in loop facility, per circuit			USL	UREWO		101.30	43.13								
	4-WIRE 19.2, 56 OR 64 KBPS DIGITAL GRADE LOOP															
	4 Wire Unbundled Digital Loop 2.4 Kbps - Zone 1		1	UDL	UDL2X	29.93	126.66	89.12	59.35	14.61						
	4 Wire Unbundled Digital Loop 2.4 Kbps - Zone 2		2	UDL	UDL2X	33.99	126.66	89.12	59.35	14.61						
	4 Wire Unbundled Digital Loop 2.4 Kbps - Zone3		3	UDL	UDL2X	34.74	126.66	89.12	59.35	14.61						
	4 Wire Unbundled Digital Loop 4.8 Kbps -Zone 1		1	UDL	UDL4X	29.93	126.66	89.12	59.35	14.61						
	4 Wire Unbundled Digital Loop 4.8 Kbps - Zone 2		2	UDL	UDL4X	33.99	126.66	89.12	59.35	14.61						
	4 Wire Unbundled Digital Loop 4.8 Kbps - Zone 3		3	UDL	UDL4X	34.74	126.66	89.12	59.35	14.61						
	4 Wire Unbundled Digital Loop 9.6 Kbps - Zone 1		1	UDL	UDL9X	29.93	126.66	89.12	59.35	14.61						
	5 Wire Unbundled Digital Loop 9.6 Kbps - Zone 2		2	UDL	UDL9X	33.99	126.66	89.12	59.35	14.61						
	6 Wire Unbundled Digital Loop 9.6 Kbps - Zone 3		3	UDL	UDL9X	34.74	126.66	89.12	59.35	14.61						
	4 Wire Unbundled Digital 19.2 Kbps - Zone 1		1	UDL	UDL19	29.93	126.66	89.12	59.35	14.61						
	4 Wire Unbundled Digital 19.2 Kbps - Zone 2		2	UDL	UDL19	33.99	126.66	89.12	59.35	14.61						

UNBUNDLED NETWORK ELEMENTS - South Carolina																	Att: 2 Exh: A
CATEGORY		RATE ELEMENTS	Interim	Zone	BCS	USOC	RATES($)					Svc Order Submitted Elec per LSR	Svc Order Submitted Manually per LSR	Incremental Charge - Manual Svc Order vs. Electronic-1st	Incremental Charge - Manual Svc Order vs. Electronic-Add'l	Incremental Charge - Manual Svc Order vs. Electronic-Disc 1st	Incremental Charge - Manual Svc Order vs. Electronic-Disc Add'l
							Rec	Nonrecurring		Nonrecurring Disconnect		OSS Rates($)					
								First	Add'l	First	Add'l	SOMEC	SOMAN	SOMAN	SOMAN	SOMAN	SOMAN
		4 Wire Unbundled Digital 19.2 Kbps - Zone 3		3	UDL	UDL19	34.74	126.66	89.12	59.35	14.61						
		4 Wire Unbundled Digital Loop 56 Kbps - Zone 1		1	UDL	UDL56	29.93	126.66	89.12	59.35	14.61						
		4 Wire Unbundled Digital Loop 56 Kbps - Zone 2		2	UDL	UDL56	33.99	126.66	89.12	59.35	14.61						
		4 Wire Unbundled Digital Loop 56 Kbps - Zone 3		3	UDL	UDL56	34.74	126.66	89.12	59.35	14.61						
		4 Wire Unbundled Digital Loop 64 Kbps - Zone 1		1	UDL	UDL64	29.93	126.66	89.12	59.35	14.61						
		4 Wire Unbundled Digital Loop 64 Kbps - Zone 2		2	UDL	UDL64	33.99	126.66	89.12	59.35	14.61						
		4 Wire Unbundled Digital Loop 64 Kbps - Zone 3		3	UDL	UDL64	34.74	126.66	89.12	59.35	14.61						
		Switch-As-Is Conversion rate per UNE Loop, Single LSR, (per DS0)			UDL	URESL		24.88	3.51								
		Switch-As-Is Conversion rate per UNE Loop, Spreadsheet, (per DS0)			UDL	URESP		26.37	4.99								
		Unbundled Loop Service Rearrangement, change in loop facility, per circuit			UDL	UREWO		102.34	49.85								
	2-WIRE Unbundled COPPER LOOP																
		2-Wire Unbundled Copper Loop-Designed including manual service inquiry & facility reservation - Zone 1		1	UCL	UCLPB	12.19	119.91	69.62	50.37	7.93						
		2-Wire Unbundled Copper Loop-Designed including manual service inquiry & facility reservation - Zone 2		2	UCL	UCLPB	13.71	119.91	69.62	50.37	7.93						
		2 Wire Unbundled Copper Loop-Designed including manual service inquiry & facility reservation - Zone 3		3	UCL	UCLPB	14.14	119.91	69.62	50.37	7.93						
		2-Wire Unbundled Copper Loop-Designed without manual service inquiry and facility reservation - Zone 1		1	UCL	UCLPW	12.19	94.87	56.89	50.37	7.93						
		2-Wire Unbundled Copper Loop-Designed without manual service inquiry and facility reservation - Zone 2		2	UCL	UCLPW	13.71	94.87	56.89	50.37	7.93						
		2-Wire Unbundled Copper Loop-Designed without manual service inquiry and facility reservation - Zone 3		3	UCL	UCLPW	14.14	94.87	56.89	50.37	7.93						
		Order Coordination for Unbundled Copper Loops (per loop)			UCL	UCLMC		8.17	8.17								
		Unbundled Loop Service Rearrangement, change in loop facility, per circuit			UCL	UREWO		94.87	42.57								
	4-WIRE COPPER LOOP																
		4-Wire Copper Loop-Designed including manual service inquiry and facility reservation - Zone 1		1	UCL	UCL4S	19.64	144.17	93.88	55.12	10.38						
		4-Wire Copper Loop-Designed including manual service inquiry and facility reservation - Zone 2		2	UCL	UCL4S	20.90	144.17	93.88	55.12	10.38						
		4-Wire Copper Loop-Designed including manual service inquiry and facility reservation - Zone 3		3	UCL	UCL4S	19.34	144.17	93.88	55.12	10.38						
		4-Wire Copper Loop-Designed without manual service inquiry and facility reservation - Zone 1		1	UCL	UCL4W	19.64	119.13	81.15	55.12	10.38						
		4-Wire Copper Loop-Designed without manual service inquiry and facility reservation - Zone 2		2	UCL	UCL4W	20.90	119.13	81.15	55.12	10.38						
		4-Wire Copper Loop-Designed without manual service inquiry and facility reservation - Zone 3		3	UCL	UCL4W	19.34	119.13	81.15	55.12	10.38						
		Order Coordination for Unbundled Copper Loops (per loop)			UCL	UCLMC		8.17	8.17								
		Unbundled Loop Service Rearrangement, change in loop facility, per circuit			UCL	UREWO		94.87	42.57								
		Order Coordination for Specified Conversion Time (per LSR)			UEA, UDN, UAL, UHL, UDL, USL	OCOSL		18.13									
	Rearrangements																
		EEL to UNE-L Retermination, per 2 Wire Unbundled Voice Loop-SL2			UEA	UREEL		87.90	36.44								
		EEL to UNE-L Retermination, per 4 Wire Unbundled Voice Loop			UEA	UREEL		87.90	36.44								
		EEL to UNE-L Retermination, per 2 Wire ISDN Loop			UDN	UREEL		91.82	44.25								
		EEL to UNE-L Retermination, per 4 Wire Unbundled Digital Loop			UDL	UREEL		102.34	49.85								
		EEL to UNE-L Retermination, per 4 Wire Unbundled DS1 Loop			USL	UREEL		101.30	43.13								
UNE LOOP COMMINGLING																	
	2-WIRE ANALOG VOICE GRADE LOOP - COMMINGLING																
		2-Wire Analog Voice Grade Loop - Service Level 2 w/Loop or Ground Start Signaling - Zone 1		1	NTCVG	UEAL2	16.68	105.98	68.43	53.05	10.61						
		2-Wire Analog Voice Grade Loop - Service Level 2 w/Loop or Ground Start Signaling - Zone 2		2	NTCVG	UEAL2	23.13	105.98	68.43	53.05	10.61						
		2-Wire Analog Voice Grade Loop - Service Level 2 w/Loop or Ground Start Signaling - Zone 3		3	NTCVG	UEAL2	28.46	105.98	68.43	53.05	10.61						

UNBUNDLED NETWORK ELEMENTS - South Carolina																	Att: 2 Exh: A
CATEGORY		RATE ELEMENTS	Interim	Zone	BCS	USOC	RATES($)					Svc Order Submitted Elec per LSR	Svc Order Submitted Manually per LSR	Incremental Charge - Manual Svc Order vs. Electronic-1st	Incremental Charge - Manual Svc Order vs. Electronic-Add'l	Incremental Charge - Manual Svc Order vs. Electronic-Disc 1st	Incremental Charge - Manual Svc Order vs. Electronic-Disc Add'l
							Rec	Nonrecurring		Nonrecurring Disconnect		OSS Rates($)					
								First	Add'l	First	Add'l	SOMEC	SOMAN	SOMAN	SOMAN	SOMAN	SOMAN
		2-Wire Analog Voice Grade Loop - Service Level 2 w/Reverse Battery Signaling - Zone 1		1	NTCVG	UEAR2	16.68	105.98	68.43	53.05	10.61						
		2-Wire Analog Voice Grade Loop - Service Level 2 w/Reverse Battery Signaling - Zone 2		2	NTCVG	UEAR2	23.13	105.98	68.43	53.05	10.61						
		2-Wire Analog Voice Grade Loop - Service Level 2 w/Reverse Battery Signaling - Zone 3		3	NTCVG	UEAR2	28.46	105.98	68.43	53.05	10.61						
		Switch-As-Is Conversion rate per UNE Loop, Single LSR, (per DS0)			NTCVG	URESL		24.88	3.51								
		Switch-As-Is Conversion rate per UNE Loop, Spreadsheet, (per DS0)			NTCVG	URESP		26.37	4.99								
		Unbundled Loop Service Rearrangement, change in loop facility, per circuit			NTCVG	UREWO		87.90	36.44								
		Loop Tagging - Service Level 2 (SL2)			NTCVG	URETL		11.24	1.10								
	4-WIRE ANALOG VOICE GRADE LOOP																
		4-Wire Analog Voice Grade Loop - Zone 1		1	NTCVG	UEAL4	32.59	132.38	94.83	59.35	14.61						
		4-Wire Analog Voice Grade Loop - Zone 2		2	NTCVG	UEAL4	43.89	132.38	94.83	59.35	14.61						
		4-Wire Analog Voice Grade Loop - Zone 3		3	NTCVG	UEAL4	43.38	132.38	94.83	59.35	14.61						
		Switch-As-Is Conversion rate per UNE Loop, Single LSR, (per DS0)			NTCVG	URESL		24.88	3.51								
		Switch-As-Is Conversion rate per UNE Loop, Spreadsheet, (per DS0)			NTCVG	URESP		26.37	4.99								
		Unbundled Loop Service Rearrangement, change in loop facility, per circuit			NTCVG	UREWO		87.90	36.44								
	4-WIRE DS1 DIGITAL LOOP - COMMINGLING																
		4-Wire DS1 Digital Loop - Zone 1		1	NTCD1	USLXX	79.51	253.03	157.89	44.80	11.73						
		4-Wire DS1 Digital Loop - Zone 2		2	NTCD1	USLXX	136.00	253.03	157.89	44.80	11.73						
		4-Wire DS1 Digital Loop - Zone 3		3	NTCD1	USLXX	229.15	253.03	157.89	44.80	11.73						
		Switch-As-Is Conversion rate per UNE Loop, Single LSR, (per DS1)			NTCD1	URESL		24.88	3.51								
		Switch-As-Is Conversion rate per UNE Loop, Spreadsheet, (per DS1)			NTCD1	URESP		26.37	4.99								
		Unbundled Loop Service Rearrangement, change in loop facility, per circuit			NTCD1	UREWO		101.30	43.13								
	4-WIRE 19.2, 56 OR 64 KBPS DIGITAL GRADE LOOP																
		4 Wire Unbundled Digital Loop 2.4 Kbps - Zone 1		1	NTCUD	UDL2X	29.93	126.66	89.12	59.35	14.61						
		4 Wire Unbundled Digital Loop 2.4 Kbps - Zone 2		2	NTCUD	UDL2X	33.99	126.66	89.12	59.35	14.61						
		4 Wire Unbundled Digital Loop 2.4 Kbps - Zone3		3	NTCUD	UDL2X	34.74	126.66	89.12	59.35	14.61						
		4 Wire Unbundled Digital Loop 4.8 Kbps -Zone 1		1	NTCUD	UDL4X	29.93	126.66	89.12	59.35	14.61						
		4 Wire Unbundled Digital Loop 4.8 Kbps - Zone 2		2	NTCUD	UDL4X	33.99	126.66	89.12	59.35	14.61						
		4 Wire Unbundled Digital Loop 4.8 Kbps - Zone 3		3	NTCUD	UDL4X	34.74	126.66	89.12	59.35	14.61						
		4 Wire Unbundled Digital Loop 9.6 Kbps - Zone 1		1	NTCUD	UDL9X	29.93	126.66	89.12	59.35	14.61						
		5 Wire Unbundled Digital Loop 9.6 Kbps - Zone 2		2	NTCUD	UDL9X	33.99	126.66	89.12	59.35	14.61						
		6 Wire Unbundled Digital Loop 9.6 Kbps - Zone 3		3	NTCUD	UDL9X	34.74	126.66	89.12	59.35	14.61						
		4 Wire Unbundled Digital 19.2 Kbps - Zone 1		1	NTCUD	UDL19	29.93	126.66	89.12	59.35	14.61						
		4 Wire Unbundled Digital 19.2 Kbps - Zone 2		2	NTCUD	UDL19	33.99	126.66	89.12	59.35	14.61						
		4 Wire Unbundled Digital 19.2 Kbps - Zone 3		3	NTCUD	UDL19	34.74	126.66	89.12	59.35	14.61						
		4 Wire Unbundled Digital Loop 56 Kbps - Zone 1		1	NTCUD	UDL56	29.93	126.66	89.12	59.35	14.61						
		4 Wire Unbundled Digital Loop 56 Kbps - Zone 2		2	NTCUD	UDL56	33.99	126.66	89.12	59.35	14.61						
		4 Wire Unbundled Digital Loop 56 Kbps - Zone 3		3	NTCUD	UDL56	34.74	126.66	89.12	59.35	14.61						
		4 Wire Unbundled Digital Loop 64 Kbps - Zone 1		1	NTCUD	UDL64	29.93	126.66	89.12	59.35	14.61						
		4 Wire Unbundled Digital Loop 64 Kbps - Zone 2		2	NTCUD	UDL64	33.99	126.66	89.12	59.35	14.61						
		4 Wire Unbundled Digital Loop 64 Kbps - Zone 3		3	NTCUD	UDL64	34.74	126.66	89.12	59.35	14.61						
		Switch-As-Is Conversion rate per UNE Loop, Single LSR, (per DS0)			NTCUD	URESL		24.88	3.51								
		Switch-As-Is Conversion rate per UNE Loop, Spreadsheet, (per DS0)			NTCUD	URESP		26.37	4.99								
		Unbundled Loop Service Rearrangement, change in loop facility, per circuit			NTCUD	UREWO		102.34	49.85								
		Order Coordination for Specified Conversion Time (per LSR)			NTCVG, NTCUD, NTCD1	OCOSL		18.13									
MAINTENANCE OF SERVICE																	

UNBUNDLED NETWORK ELEMENTS - South Carolina																	Att: 2 Exh: A
CATEGORY		RATE ELEMENTS	Interim	Zone	BCS	USOC	RATES($)					Svc Order Submitted Elec per LSR	Svc Order Submitted Manually per LSR	Incremental Charge - Manual Svc Order vs. Electronic-1st	Incremental Charge - Manual Svc Order vs. Electronic-Add'l	Incremental Charge - Manual Svc Order vs. Electronic-Disc 1st	Incremental Charge - Manual Svc Order vs. Electronic-Disc Add'l
							Rec	Nonrecurring		Nonrecurring Disconnect		OSS Rates($)					
								First	Add'l	First	Add'l	SOMEC	SOMAN	SOMAN	SOMAN	SOMAN	SOMAN
		Maintenance of Service Charge, Basic Time, per half hour			UDC, UEA, UDL, UDN, USL, UAL, UHL, UCL, NTCVG, NTCUD, NTCD1, U1TD1, U1TD3, U1TDX, U1TS1, U1TVX, UDF, UDFCX, UDLSX, UE3, ULDD1, ULDD3, ULDDX, ULDS1, ULDVX, UNC1X, UNC3X, UNCDX, UNCSX, UNCVX, ULS	MVVBT		80.00	55.00								
		Maintenance of Service Charge, Overtime, per half hour			UDC, UEA, UDL, UDN, USL, UAL, UHL, UCL, NTCVG, NTCUD, NTCD1, U1TD1, U1TD3, U1TDX, U1TS1, U1TVX, UDF, UDFCX, UDLSX, UE3, ULDD1, ULDD3, ULDDX, ULDS1, ULDVX, UNC1X, UNC3X, UNCDX, UNCSX, UNCVX, ULS	MVVOT		90.00	65.00								
		Maintenance of Service Charge, Premium, per half hour			UDC, UEA, UDL, UDN, USL, UAL, UHL, UCL, NTCVG, NTCUD, NTCD1, U1TD1, U1TD3, U1TDX, U1TS1, U1TVX, UDF, UDFCX, UDLSX, UE3, ULDD1, ULDD3, ULDDX, ULDS1, ULDVX, UNC1X, UNC3X, UNCDX, UNCSX, UNCVX, ULS	MVVPT		100.00	75.00								
LOOP MODIFICATION																	
		Unbundled Loop Modification, Removal of Load Coils - 2 Wire pair less than or equal to 18k ft, per Unbundled Loop			UAL, UHL, UCL, UEQ, ULS, UEA, UEANL, UEPSR, UEPSB	ULM2L		32.46	32.46								
		Unbundled Loop Modification Removal of Load Coils - 4 Wire less than or equal to 18K ft, per Unbundled Loop			UHL, UCL, UEA	ULM4L		32.46	32.46								
		Unbundled Loop Modification Removal of Bridged Tap Removal, per unbundled loop			UAL, UHL, UCL, UEQ, ULS, UEA, UEANL, UEPSR, UEPSB	ULMBT		32.48	32.48								
SUB-LOOPS																	
	Sub-Loop Distribution																
		Sub-Loop - Per Cross Box Location - CLEC Feeder Facility Set-Up			UEANL, UEF	USBSA		241.42	241.42								
		Sub-Loop - Per Cross Box Location - Per 25 Pair Panel Set-Up			UEANL, UEF	USBSB		22.69	22.69								
		Sub-Loop - Per Building Equipment Room - CLEC Feeder Facility Set-Up			UEANL	USBSC		177.84	177.84								
		Sub-Loop - Per Building Equipment Room - Per 25 Pair Panel Set-Up			UEANL	USBSD		55.58	55.58								

UNBUNDLED NETWORK ELEMENTS - South Carolina																	Att: 2 Exh: A
CATEGORY		RATE ELEMENTS	Interim	Zone	BCS	USOC	RATES($)					Svc Order Submitted Elec per LSR	Svc Order Submitted Manually per LSR	Incremental Charge - Manual Svc Order vs. Electronic-1st	Incremental Charge - Manual Svc Order vs. Electronic-Add'l	Incremental Charge - Manual Svc Order vs. Electronic-Disc 1st	Incremental Charge - Manual Svc Order vs. Electronic-Disc Add'l
							Rec	Nonrecurring		Nonrecurring Disconnect		OSS Rates($)					
								First	Add'l	First	Add'l	SOMEC	SOMAN	SOMAN	SOMAN	SOMAN	SOMAN
		Sub-Loop Distribution Per 2-Wire Analog Voice Grade Loop - Zone 1		1	UEANL	USBN2	8.87	65.94	31.03	45.35	6.71						
		Sub-Loop Distribution Per 2-Wire Analog Voice Grade Loop - Zone 2		2	UEANL	USBN2	12.58	65.94	31.03	45.35	6.71						
		Sub-Loop Distribution Per 2-Wire Analog Voice Grade Loop - Zone 3		3	UEANL	USBN2	14.79	65.94	31.03	45.35	6.71						
		Order Coordination for Unbundled Sub-Loops, per sub-loop pair			UEANL	USBMC		8.17	8.17								
		Sub-Loop Distribution Per 4-Wire Analog Voice Grade Loop - Zone 1		1	UEANL	USBN4	14.11	79.21	44.29	49.82	9.09						
		Sub-Loop Distribution Per 4-Wire Analog Voice Grade Loop - Zone 2		2	UEANL	USBN4	19.40	79.21	44.29	49.82	9.09						
		Sub-Loop Distribution Per 4-Wire Analog Voice Grade Loop - Zone 3		3	UEANL	USBN4	18.90	79.21	44.29	49.82	9.09						
		Order Coordination for Unbundled Sub-Loops, per sub-loop pair			UEANL	USBMC		8.17	8.17								
		Sub-Loop 2-Wire Intrabuilding Network Cable (INC)			UEANL	USBR2	2.41	53.13	18.21	45.35	6.71						
		Order Coordination for Unbundled Sub-Loops, per sub-loop pair			UEANL	USBMC		8.17	8.17								
		Sub-Loop 4-Wire Intrabuilding Network Cable (INC)			UEANL	USBR4	5.36	59.38	24.47	49.82	9.09						
		Order Coordination for Unbundled Sub-Loops, per sub-loop pair			UEANL	USBMC		8.17	8.17								
		Loop Testing - Basic 1st Half Hour			UEANL	URET1		34.23	0.00								
		Loop Testing - Basic Additional Half Hour			UEANL	URETA		19.90	19.90								
		2 Wire Copper Unbundled Sub-Loop Distribution - Zone 1		1	UEF	UCS2X	7.11	65.94	31.03	45.35	6.71						
		2 Wire Copper Unbundled Sub-Loop Distribution - Zone 2		2	UEF	UCS2X	9.83	65.94	31.03	45.35	6.71						
		2 Wire Copper Unbundled Sub-Loop Distribution - Zone 3		3	UEF	UCS2X	10.48	65.94	31.03	45.35	6.71						
		Order Coordination for Unbundled Sub-Loops, per sub-loop pair			UEF	USBMC		8.17	8.17								
		4 Wire Copper Unbundled Sub-Loop Distribution - Zone 1		1	UEF	UCS4X	7.85	79.21	44.29	49.82	9.09						
		4 Wire Copper Unbundled Sub-Loop Distribution - Zone 2		2	UEF	UCS4X	14.17	79.21	44.29	49.82	9.09						
		4 Wire Copper Unbundled Sub-Loop Distribution - Zone 3		3	UEF	UCS4X	12.64	79.21	44.29	49.82	9.09						
		Order Coordination for Unbundled Sub-Loops, per sub-loop pair			UEF	USBMC		8.17	8.17								
		Loop Tagging Service Level 1, Unbundled Copper Loop, Non-Designed and Distribution Subloops			UEF, UEANL	URETL		8.95	0.88								
		Loop Testing - Basic 1st Half Hour			UEF	URET1		34.23	0.00								
		Loop Testing - Basic Additional Half Hour			UEF	URETA		19.90	19.90								
	Unbundled Sub-Loop Modification																
		Unbundled Sub-Loop Modification - 2-W Copper Dist Load Coil/Equip Removal per 2-W PR			UEF	ULM2X		176.17	5.11								
		Unbundled Sub-loop Modification - 4-W Copper Dist Load Coil/Equip Removal per 4-W PR			UEF	ULM4X		176.17	5.11								
		Unbundled Loop Modification, Removal of Bridge Tap, per unbundled loop			UEF	ULMBT		278.82	6.13								
	Unbundled Network Terminating Wire (UNTW)																
		Unbundled Network Terminating Wire (UNTW) per Pair			UENTW	UENPP	0.3303	30.20	30.20								
	Network Interface Device (NID)																
		Network Interface Device (NID) - 1-2 lines			UENTW	UND12		43.68	28.79								
		Network Interface Device (NID) - 1-6 lines			UENTW	UND16		64.42	49.53								
		Network Interface Device Cross Connect - 2 W			UENTW	UNDC2		5.92	5.92								
		Network Interface Device Cross Connect - 4W			UENTW	UNDC4		5.92	5.92								
UNE OTHER, PROVISIONING ONLY - NO RATE																	
		Unbundled Contact Name, Provisioning Only - no rate			UAL, UCL, UDC, UDL, UDN, UEA, UHL, UEANL, UEF, UEQ, UENTW, NTCVG, NTCUD, NTCD1, USL	UNECN	0.00	0.00									
		Unbundled DS1 Loop - Superframe Format Option - no rate			USL, NTCD1	CCOSF		0.00									
		Unbundled DS1 Loop - Expanded Superframe Format option - no rate			USL, NTCD1	CCOEF		0.00									
		NID - Dispatch and Service Order for NID installation			UENTW	UNDBX	0.00	0.00									
		UNTW Circuit Establishment, Provisioning Only - No Rate			UENTW	UENCE	0.00	0.00									

UNBUNDLED NETWORK ELEMENTS - South Carolina																	Att: 2 Exh: A
CATEGORY		RATE ELEMENTS	Interim	Zone	BCS	USOC	RATES($)					Svc Order Submitted Elec per LSR	Svc Order Submitted Manually per LSR	Incremental Charge - Manual Svc Order vs. Electronic-1st	Incremental Charge - Manual Svc Order vs. Electronic-Add'l	Incremental Charge - Manual Svc Order vs. Electronic-Disc 1st	Incremental Charge - Manual Svc Order vs. Electronic-Disc Add'l
							Rec	Nonrecurring		Nonrecurring Disconnect		OSS Rates($)					
								First	Add'l	First	Add'l	SOMEC	SOMAN	SOMAN	SOMAN	SOMAN	SOMAN
LOOP MAKE-UP																	
		Loop Makeup - Preordering Without Reservation, per working or spare facility queried (Manual).			UMK	UMKLW		24.04	24.04								
		Loop Makeup - Preordering With Reservation, per spare facility queried (Manual).			UMK	UMKLP		25.49	25.49								
		Loop Makeup--With or Without Reservation, per working or spare facility queried (Mechanized)			UMK	UMKMQ		0.34	0.34								
LINE SPLITTING																	
	END USER ORDERING-CENTRAL OFFICE BASED																
		Line Splitting - per line activation DLEC owned splitter			UEPSR UEPSB	UREOS	0.61										
		Line Splitting - per line activation AT&T owned - physical			UEPSR UEPSB	UREBP	0.61	37.09	21.24	20.07	9.85						
		Line Splitting - per line activation AT&T owned - virtual			UEPSR UEPSB	UREBV	0.61	37.09	21.24	20.07	9.85						
	END USER ORDERING - REMOTE SITE LINE SPLITTING																
	UNBUNDLED EXCHANGE ACCESS LOOP																
	2-WIRE ANALOG VOICE GRADE LOOP																
		2 Wire Analog Voice Grade Loop-Service Level 1-Line Splitting-Zone 1		1	UEPSR UEPSB	UEALS	14.94	37.92	17.62	23.56	5.32						
		2 Wire Analog Voice Grade Loop-Service Level 1-Line Splitting-Zone 1		1	UEPSR UEPSB	UEABS	14.94	37.92	17.62	23.56	5.32						
		2 Wire Analog Voice Grade Loop- Service Level 1-Line Splitting-Zone 2		2	UEPSR UEPSB	UEALS	21.39	37.92	17.62	23.56	5.32						
		2 Wire Analog Voice Grade Loop- Service Level 1-Line Splitting-Zone 2		2	UEPSR UEPSB	UEABS	21.39	37.92	17.62	23.56	5.32						
		2 Wire Analog Voice Grade Loop-Service Level 1-Line Splitting-Zone 3		3	UEPSR UEPSB	UEALS	26.72	37.92	17.62	23.56	5.32						
		2 Wire Analog Voice Grade Loop-Service Level 1-Line Splitting-Zone 3		3	UEPSR UEPSB	UEABS	26.72	37.92	17.62	23.56	5.32						
	PHYSICAL COLLOCATION																
		Physical Collocation-2 Wire Cross Connects (Loop) for Line Splitting			UEPSR UEPSB	PE1LS	0.0341	12.32	11.83	6.04	5.45						
	VIRTUAL COLLOCATION																
		Virtual Collocation-2 Wire Cross Connects (Loop) for Line Splitting			UEPSR UEPSB	VE1LS	0.0317	12.32	11.83	6.04	5.45						
UNBUNDLED DEDICATED TRANSPORT																	
	INTEROFFICE CHANNEL - DEDICATED TRANSPORT																
		Interoffice Channel - 2-Wire Voice Grade - per mile			U1TVX	1L5XX	0.0167										
		Interoffice Channel - 2-Wire Voice Grade - Facility Termination			U1TVX	U1TV2	24.30	40.63	27.47	16.77	6.91						
		Interoffice Channel - 2-Wire Voice Grade Rev Bat. - per mile			U1TVX	1L5XX	0.0167										
		Interoffice Channel - 2-Wire VG Rev Bat. - Facility Termination			U1TVX	U1TR2	24.30	40.63	27.47	16.77	6.91						
		Interoffice Channel - 4-Wire Voice Grade - per mile			U1TVX	1L5XX	0.0167										
		Interoffice Channel - 4- Wire Voice Grade - Facility Termination			U1TVX	U1TV4	21.29	40.63	27.47	16.77	6.91						
		Interoffice Channel - 56 kbps - per mile			U1TDX	1L5XX	0.0167										
		Interoffice Channel - 56 kbps - Facility Termination			U1TDX	U1TD5	16.76	40.63	27.47	16.77	6.91						
		Interoffice Channel - 64 kbps - per mile			U1TDX	1L5XX	0.0167										
		Interoffice Channel - 64 kbps - Facility Termination			U1TDX	U1TD6	16.76	40.63	27.47	16.77	6.91						
		Interoffice Channel - DS1 - per mile			U1TD1	1L5XX	0.3415										
		Interoffice Channel - DS1 - Facility Termination			U1TD1	U1TF1	77.14	89.47	81.99	16.39	14.48						
		Interoffice Channel - DS3 - per mile			U1TD3	1L5XX	8.02										
		Interoffice Channel - DS3 - Facility Termination			U1TD3	U1TF3	880.65	279.37	163.12	60.33	58.59						
		Interoffice Channel - STS-1 - per mile			U1TS1	1L5XX	8.02										
		Interoffice Channel - STS-1 - Facility Termination			U1TS1	U1TFS	880.55	279.37	163.12	60.33	58.59						
	UNBUNDLED DARK FIBER																
		Dark Fiber - Interoffice Transport, Per Four Fiber Strands, Per Route Mile Or Fraction Thereof			UDF, UDFCX	1L5DF	36.41										
		Dark Fiber - Interoffice Transport, Per Four Fiber Strands, Per Route Mile Or Fraction Thereof			UDF, UDFCX	UDF14		640.51	138.17	317.76	198.11						
HIGH CAPACITY UNBUNDLED LOCAL LOOP																	
	DS-3/STS-1 UNBUNDLED LOCAL LOOP - Stand Alone																
		DS3 Unbundled Local Loop - per mile			UE3	1L5ND	12.26										
		DS3 Unbundled Local Loop - Facility Termination			UE3	UE3PX	306.36	452.52	264.53	119.75	83.77						
		STS-1Unbundled Local Loop - per mile			UDLSX	1L5ND	12.26										
		STS-1 Unbundled Local Loop - Facility Termination			UDLSX	UDLS1	313.49	452.52	264.53	119.75	83.77						

UNBUNDLED NETWORK ELEMENTS - South Carolina

Att: 2 Exh: A

CATEGORY	RATE ELEMENTS	Interim	Zone	BCS	USOC	RATES($)					Svc Order Submitted Elec per LSR	Svc Order Submitted Manually per LSR	Incremental Charge - Manual Svc Order vs. Electronic-1st	Incremental Charge - Manual Svc Order vs. Electronic-Add'l	Incremental Charge - Manual Svc Order vs. Electronic-Disc 1st	Incremental Charge - Manual Svc Order vs. Electronic-Disc Add'l
						Rec	Nonrecurring		Nonrecurring Disconnect		OSS Rates($)					
							First	Add'l	First	Add'l	SOMEC	SOMAN	SOMAN	SOMAN	SOMAN	SOMAN
ENHANCED EXTENDED LINK (EELs)																
	Network Elements Used in Combinations															
	2-Wire VG Loop (SL2) in Combination - Zone 1		1	UNCVX	UEAL2	16.68	105.98	68.43	53.05	10.61						
	2-Wire VG Loop (SL2) in Combination - Zone 2		2	UNCVX	UEAL2	23.13	105.98	68.43	53.05	10.61						
	2-Wire VG Loop (SL2) in Combination - Zone 3		3	UNCVX	UEAL2	28.46	105.98	68.43	53.05	10.61						
	4-Wire Analog Voice Grade Loop in Combination - Zone 1		1	UNCVX	UEAL4	32.59	132.38	94.83	59.35	14.61						
	4-Wire Analog Voice Grade Loop in Combination - Zone 2		2	UNCVX	UEAL4	43.89	132.38	94.83	59.35	14.61						
	4-Wire Analog Voice Grade Loop in Combination - Zone 3		3	UNCVX	UEAL4	43.38	132.38	94.83	59.35	14.61						
	2-Wire ISDN Loop in Combination - Zone 1		1	UNCNX	U1L2X	25.21	117.58	80.03	53.05	10.61						
	2-Wire ISDN Loop in Combination - Zone 2		2	UNCNX	U1L2X	32.76	117.58	80.03	53.05	10.61						
	2-Wire ISDN Loop in Combination - Zone 3		3	UNCNX	U1L2X	37.70	117.58	80.03	53.05	10.61						
	4-Wire 56Kbps Digital Grade Loop in Combination - Zone 1		1	UNCDX	UDL56	29.93	126.66	89.12	59.35	14.61						
	4-Wire 56Kbps Digital Grade Loop in Combination - Zone 2		2	UNCDX	UDL56	33.99	126.66	89.12	59.35	14.61						
	4-Wire 56Kbps Digital Grade Loop in Combination - Zone 3		3	UNCDX	UDL56	34.74	126.66	89.12	59.35	14.61						
	4-Wire 64Kbps Digital Grade Loop in Combination - Zone 1		1	UNCDX	UDL64	29.93	126.66	89.12	59.35	14.61						
	4-Wire 64Kbps Digital Grade Loop in Combination - Zone 2		2	UNCDX	UDL64	33.99	126.66	89.12	59.35	14.61						
	4-Wire 64Kbps Digital Grade Loop in Combination - Zone 3		3	UNCDX	UDL64	34.74	126.66	89.12	59.35	14.61						
	4-Wire DS1 Digital Loop in Combination - Zone 1		1	UNC1X	USLXX	79.51	253.03	157.89	44.80	11.73						
	4-Wire DS1 Digital Loop in Combination - Zone 2		2	UNC1X	USLXX	136.00	253.03	157.89	44.80	11.73						
	4-Wire DS1 Digital Loop in Combination - Zone 3		3	UNC1X	USLXX	229.15	253.03	157.89	44.80	11.73						
	DS3 Local Loop in combination - per mile			UNC3X	1L5ND	12.26										
	DS3 Local Loop in combination - Facility Termination			UNC3X	UE3PX	306.36	452.52	264.53	119.75	83.77						
	STS-1 Local Loop in combination - per mile			UNCSX	1L5ND	12.26										
	STS-1 Local Loop in combination - Facility Termination			UNCSX	UDLS1	313.49	452.52	264.53	119.75	83.77						
	Interoffice Channel in combination - 2-wire VG - per mile			UNCVX	1L5XX	0.0167										
	Interoffice Channel in combination - 2-wire VG - Facility Termination			UNCVX	U1TV2	24.30	40.63	27.47	16.77	6.91						
	Interoffice Channel in combination - 4-wire VG - per mile			UNCVX	1L5XX	0.0167										
	Interoffice Channel in combination - 4-wire VG - Facility Termination			UNCVX	U1TV4	21.29	40.63	27.47	16.77	6.91						
	Interoffice Channel in combination - 4-wire 56 kbps - per mile			UNCDX	1L5XX	0.0167										
	Interoffice Channel in combination - 4-wire 56 kbps - Facility Termination			UNCDX	U1TD5	16.76	40.63	27.47	16.77	6.91						
	Interoffice Channel in combination - 4-wire 64 kbps - per mile			UNCDX	1L5XX	0.0167										
	Interoffice Channel in combination - 4-wire 64 kbps - Facility Termination			UNCDX	U1TD6	16.76	40.63	27.47	16.77	6.91						
	Interoffice Channel in combination - DS1 - per mile			UNC1X	1L5XX	0.3415										
	Interoffice Channel in combination - DS1 Facility Termination			UNC1X	U1TF1	77.14	89.47	81.99	16.39	14.48						
	Interoffice Channel in combination - DS3 - per mile			UNC3X	1L5XX	8.02										
	Interoffice Channel in combination - DS3 - Facility Termination			UNC3X	U1TF3	880.65	279.37	163.12	60.33	58.59						
	Interoffice Channel in combination - STS-1 - per mile			UNCSX	1L5XX	8.02										
	Interoffice Channel in combination - STS-1 Facility Termination			UNCSX	U1TFS	880.55	279.37	163.12	60.33	58.59						
ADDITIONAL NETWORK ELEMENTS																
	Optional Features & Functions:															
	Clear Channel Capability Extended Frame Option - per DS1	I		U1TD1, ULDD1,UNC1X	CCOEF		0.00									
	Clear Channel Capability Super FrameOption - per DS1	I		U1TD1, ULDD1,UNC1X	CCOSF		0.00									
	Clear Channel Capability (SF/ESF) Option - Subsequent Activity - per DS1	I		ULDD1, U1TD1, UNC1X, USL	NRCCC		185.26	23.86	1.99	0.78						
	C-bit Parity Option - Subsequent Activity - per DS3	i		U1TD3, ULDD3, UE3, UNC3X	NRCC3		219.58	7.69	0.737	0.00						
	DS1/DS0 Channel System			UNC1X	MQ1	107.57	91.24	62.71	10.56	9.81						
	DS3/DS1Channel System			UNC3X, UNCSX	MQ3	144.02	178.54	94.18	33.33	31.90						
	Voice Grade COCI in combination			UNCVX	1D1VG	0.56	6.59	4.73								
	Voice Grade COCI - for 2W-SL2 & 4W Voice Grade Local Loop			UEA	1D1VG	0.56	6.59	4.73								
	Voice Grade COCI - for connection to a channelized DS1 Local Channel in the same SWC as collocation			U1TUC	1D1VG	0.56	6.59	4.73								
	OCU-DP COCI (2.4-64kbs) in combination			UNCDX	1D1DD	1.19	6.59	4.73								
	OCU-DP COCI (2.4-64kbs) - for Unbundled Digital Loop			UDL	1D1DD	1.19	6.59	4.73								
	OCU-DP COCI (2.4-64kbs) - for connection to a channelized DS1 Local Channel in the same SWC as collocation			U1TUD	1D1DD	1.19	6.59	4.73								
	2-wire ISDN COCI (BRITE) in combination			UNCNX	UC1CA	2.56	6.59	4.73								

UNBUNDLED NETWORK ELEMENTS - South Carolina

Att: 2 Exh: A

CATEGORY	RATE ELEMENTS	Interim	Zone	BCS	USOC	RATES($) Rec	Nonrecurring First	Nonrecurring Add'l	Nonrecurring Disconnect First	Nonrecurring Disconnect Add'l	Svc Order Submitted Elec per LSR	Svc Order Submitted Manually per LSR	Incremental Charge - Manual Svc Order vs. Electronic- 1st	Incremental Charge - Manual Svc Order vs. Electronic- Add'l	Incremental Charge - Manual Svc Order vs. Electronic- Disc 1st	Incremental Charge - Manual Svc Order vs. Electronic- Disc Add'l
											OSS Rates($)					
							First	Add'l	First	Add'l	SOMEC	SOMAN	SOMAN	SOMAN	SOMAN	SOMAN
	2-wire ISDN COCI (BRITE) - for a Local Loop			UDN	UC1CA	2.56	6.59	4.73								
	2-wire ISDN COCI (BRITE) - for connection to a channelized DS1 Local Channel in the same SWC as collocation			U1TUB	UC1CA	2.56	6.59	4.73								
	DS1 COCI in combination			UNC1X	UC1D1	8.64	6.59	4.73								
	DS1 COCI - for Stand Alone Local Channel			ULDD1	UC1D1	8.64	6.59	4.73								
	DS1 COCI - for Stand Alone Interoffice Channel			U1TD1	UC1D1	8.64	6.59	4.73								
	DS1 COCI - for DS1 Local Loop			USL, NTCD1	UC1D1	8.64	6.59	4.73								
	DS1 COCI - for connection to a channelized DS1 Local Channel in the same SWC as collocation			U1TUA	UC1D1	8.64	6.59	4.73								
	Wholesale - UNE, Switch-As-Is Conversion Charge			UNCVX, UNCDX, UNC1X, UNC3X, UNCSX, UDFCX, XDH1X, HFQC6, XDD2X, XDV6X, XDDFX, XDD4X, HFRST, UNCNX	UNCCC		5.61	5.61								
	Unbundled Misc Rate Element, SNE SAI, Single Network Element - Switch As Is Non-recurring Charge, per circuit (LSR)			U1TVX, U1TDX, U1TD1, U1TD3, U1TS1, UDF, UE3	URESL		40.27	13.52								
	Unbundled Misc Rate Element, SNE SAI, Single Network Element - Switch As Is Non-recurring Charge, incremental charge per circuit on a spreadsheet			U1TVX, U1TDX, U1TD1, U1TD3, U1TS1, UDF, UE3	URESP		23.80	12.11								
	Access to DCS - Customer Reconfiguration (FlexServ)															
	Customer Reconfiguration Establishment						1.48		1.85							
	DS1 DCS Termination with DS0 Switching					27.96	25.60	19.70	16.67	13.41						
	DS1 DCS Termination with DS1 Switching					12.67	18.51	12.61	12.24	8.98						
	DS3 DCS Termination with DS1 Switching					176.51	25.60	19.70	16.67	13.41						
	Node (SynchroNet)															
	Node per month			UNCDX	UNCNT	14.55										
	Service Rearrangements															
	NRC - Change in Facility Assignment per circuit Service Rearrangement	I		U1TVX, U1TDX, U1TUC, U1TUD, U1TUB, ULDVX, ULDDX, UNCVX, UNCDX, UNC1X	URETD		101.30	43.13								
	NRC - Change in Facility Assignment per circuit Project Management (added to CFA per circuit if project managed)	I		U1TVX, U1TDX, U1TUC, U1TUD, U1TUB, ULDVX, ULDDX, UNCVX, UNCDX, UNC1X	URETB		3.66	3.66								
	NRC - Order Coordination Specific Time - Dedicated Transport	I		UNC1X, UNC3X	OCOSR		18.90	18.90								
COMMINGLING																
	Commingling Authorization			UNCVX, UNCDX, UNC1X, UNC3X, UNCSX, U1TD1, U1TD3, U1TS1, UE3, UDLSX, U1TVX, U1TDX, U1TUB, ULDVX, ULDD1, ULDD3, ULDS1	CMGAU	0.00	0.00	0.00	0.00	0.00						
	Commingled (UNE part of single bandwidth circuit)															
	Commingled VG COCI			XDV2X	1D1VG	0.56	6.59	4.73								
	Commingled Digital COCI			XDV6X	1D1DD	1.19	6.59	4.73								
	Commingled ISDN COCI			XDD4X	UC1CA	2.56	6.59	4.73								
	Commingled 2-wire VG Interoffice Channel Facility Termination			XDV2X	U1TV2	24.30	40.63	27.47	16.77	6.91						
	Commingled 4-wire VG Interoffice Channel Facility Termination			XDV6X	U1TV4	21.29	40.63	27.47	16.77	6.91						
	Commingled 56kbps Interoffice Channel Facility Termination			XDD4X	U1TD5	16.76	40.63	27.47	16.77	6.91						
	Commingled 64kbps Interoffice Channel Facility Termination			XDD4X	U1TD6	16.76	40.63	27.47	16.77	6.91						
	Commingled VG/DS0 Interoffice Channel per mile			XDV2X, XDV6X, XDD4X	1L5XX	0.0167										
	Commingled 2-wire Local Loop Zone 1		1	XDV2X	UEAL2	16.68	105.98	68.43	53.05	10.61						
	Commingled 2-wire Local Loop Zone 2		2	XDV2X	UEAL2	23.13	105.98	68.43	53.05	10.61						
	Commingled 2-wire Local Loop Zone 3		3	XDV2X	UEAL2	28.46	105.98	68.43	53.05	10.61						

UNBUNDLED NETWORK ELEMENTS - South Carolina

Att: 2 Exh: A

CATEGORY	RATE ELEMENTS	Interim	Zone	BCS	USOC	RATES($)					Svc Order Submitted Elec per LSR	Svc Order Submitted Manually per LSR	Incremental Charge - Manual Svc Order vs. Electronic-1st	Incremental Charge - Manual Svc Order vs. Electronic-Add'l	Incremental Charge - Manual Svc Order vs. Electronic-Disc 1st	Incremental Charge - Manual Svc Order vs. Electronic-Disc Add'l
						Rec	Nonrecurring		Nonrecurring Disconnect		OSS Rates($)					
							First	Add'l	First	Add'l	SOMEC	SOMAN	SOMAN	SOMAN	SOMAN	SOMAN
	Commingled 4-wire Local Loop Zone 1		1	XDV6X	UEAL4	32.59	132.38	94.83	59.35	14.61						
	Commingled 4-wire Local Loop Zone 2		2	XDV6X	UEAL4	43.89	132.38	94.83	59.35	14.61						
	Commingled 4-wire Local Loop Zone 3		3	XDV6X	UEAL4	43.38	132.38	94.83	59.35	14.61						
	Commingled 56kbps Local Loop Zone 1		1	XDD4X	UDL56	29.93	126.66	89.12	59.35	14.61						
	Commingled 56kbps Local Loop Zone 2		2	XDD4X	UDL56	33.99	126.66	89.12	59.35	14.61						
	Commingled 56kbps Local Loop Zone 3		3	XDD4X	UDL56	34.74	126.66	89.12	59.35	14.61						
	Commingled 64kbps Local Loop Zone 1		1	XDD4X	UDL64	29.93	126.66	89.12	59.35	14.61						
	Commingled 64kbps Local Loop Zone 2		2	XDD4X	UDL64	33.99	126.66	89.12	59.35	14.61						
	Commingled 64kbps Local Loop Zone 3		3	XDD4X	UDL64	34.74	126.66	89.12	59.35	14.61						
	Commingled ISDN Local Loop Zone 1		1	XDD4X	U1L2X	25.21	117.58	80.03	53.05	10.61						
	Commingled ISDN Local Loop Zone 2		2	XDD4X	U1L2X	32.76	117.58	80.03	53.05	10.61						
	Commingled ISDN Local Loop Zone 3		3	XDD4X	U1L2X	37.70	117.58	80.03	53.05	10.61						
	Commingled DS1 COCI			XDH1X	UC1D1	8.64	6.59	4.73								
	Commingled DS1 Interoffice Channel Facility Termination			XDH1X	U1TF1	77.14	89.47	81.99	16.39	14.48						
	Commingled DS1 Interoffice Channel per mile			XDH1X	1L5XX	0.3415										
	Commingled DS1/DS0 Channel System			XDH1X	MQ1	107.57	91.24	62.71	10.56	9.81						
	Commingled DS1 Local Loop Zone 1		1	XDH1X	USLXX	79.51	253.03	157.89	44.80	11.73						
	Commingled DS1 Local Loop Zone 2		2	XDH1X	USLXX	136.00	253.03	157.89	44.80	11.73						
	Commingled DS1 Local Loop Zone 3		3	XDH1X	USLXX	229.15	253.03	157.89	44.80	11.73						
	Commingled DS3 Local Loop Facility Termination			HFQC6	UE3PX	306.36	452.52	264.53	119.75	83.77						
	Commingled DS3/STS-1 Local Loop per mile			HFQC6, HFRST	1L5ND	12.26										
	Commingled STS-1 Local Loop Facility Termination			HFRST	UDLS1	313.49	452.52	264.53	119.75	83.77						
	Commingled DS3/DS1 Channel System			HFQC6	MQ3	144.02	178.54	94.18	33.33	31.90						
	Commingled DS3 Interoffice Channel Facility Termination			HFQC6	U1TF3	880.65	279.37	163.12	60.33	58.59						
	Commingled DS3 Interoffice Channel per mile			HFQC6	1L5XX	8.02										
	Commingled STS-1Interoffice Channel Facility Termination			HFRST	U1TFS	880.55	279.37	163.12	60.33	58.59						
	Commingled STS-1Interoffice Channel per mile			HFRST	1L5XX	8.02										
	Commingled Dark Fiber - Interoffice Transport, Per Four Fiber Strands, Per Route Mile Or Fraction Thereof			HEQDL	1L5DF	36.41										
	Commingled Dark Fiber - Interoffice Transport, Per Four Fiber Strands, Per Route Mile Or Fraction Thereof			HEQDL	UDF14		640.51	138.17	317.76	198.11						
	UNE to Commingled Conversion Tracking			XDH1X, HFQC6	CMGUN	0.00	0.00	0.00	0.00	0.00						
	SPA to Commingled Conversion Tracking			XDH1X, HFQC6	CMGSP	0.00	0.00	0.00	0.00	0.00						
LNP Query Service																
	LNP Charge Per query					0.0008837										
	LNP Service Establishment Manual						25.09	25.09	23.07	23.07						
	LNP Service Provisioning with Point Code Establishment						594.82	303.88	269.53	198.18						
911 PBX LOCATE																
	911 PBX LOCATE DATABASE CAPABILITY															
	Service Establishment per CLEC per End User Account			9PBDC	9PBEU		1,813.00									
	Changes to TN Range or Customer Profile			9PBDC	9PBTN		181.40									
	Per Telephone Number (Monthly)			9PBDC	9PBMM	0.07										
	Change Company (Service Provider) ID			9PBDC	9PBPC		532.48									
	PBX Locate Service Support per CLEC (Monthlt)			9PBDC	9PBMR	181.29										
	Service Order Charge			9PBDC	9PBSC		15.69									
	911 PBX LOCATE TRANSPORT COMPONENT															
	See Att 3															
	Note: Rates displaying an "I" in Interim column are interim as a result of a Commission order.															

UNBUNDLED NETWORK ELEMENTS - South Carolina														Attachment: 2 Exh. B			
CATEGORY	RATE ELEMENTS	Interim	Zone	BCS	USOC	RATES ($)					Svc Order Submitted Elec per LSR	Svc Order Submitted Manually per LSR	Incremental Charge - Manual Svc Order vs. Electronic-1st	Incremental Charge - Manual Svc Order vs. Electronic-Add'l	Incremental Charge - Manual Svc Order vs. Electronic-Disc 1st	Incremental Charge - Manual Svc Order vs. Electronic-Disc Add'l
						Rec	Nonrecurring		Nonrecurring Disconnect		OSS Rates ($)					
							First	Add'l	First	Add'l	SOMEC	SOMAN	SOMAN	SOMAN	SOMAN	SOMAN
UNBUNDLED EXCHANGE ACCESS LOOP																
2-WIRE HIGH BIT RATE DIGITAL SUBSCRIBER LINE (HDSL) COMPATIBLE LOOP																
	2 Wire Unbundled HDSL Loop including manual service inquiry & facility reservation - Zone 1		1	UHL	UHL2X	11.02										
	2 Wire Unbundled HDSL Loop including manual service inquiry & facility reservation - Zone 2		2	UHL	UHL2X	12.56										
	2 Wire Unbundled HDSL Loop including manual service inquiry & facility reservation - Zone 3		3	UHL	UHL2X	13.11										
	2 Wire Unbundled HDSL Loop without manual service inquiry and facility reservation - Zone 1		1	UHL	UHL2W	11.02										
	2 Wire Unbundled HDSL Loop without manual service inquiry and facility reservation - Zone 2		2	UHL	UHL2W	12.56										
	2 Wire Unbundled HDSL Loop without manual service inquiry and facility reservation - Zone 3		3	UHL	UHL2W	13.11										
4-WIRE HIGH BIT RATE DIGITAL SUBSCRIBER LINE (HDSL) COMPATIBLE LOOP																
	4 Wire Unbundled HDSL Loop including manual service inquiry and facility reservation - Zone 1		1	UHL	UHL4X	18.42										
	4-Wire Unbundled HDSL Loop including manual service inquiry and facility reservation - Zone 2		2	UHL	UHL4X	16.48										
	4-Wire Unbundled HDSL Loop including manual service inquiry and facility reservation - Zone 3		3	UHL	UHL4X	19.37										
	4-Wire Unbundled HDSL Loop without manual service inquiry and facility reservation - Zone 1		1	UHL	UHL4W	18.42										
	4-Wire Unbundled HDSL Loop without manual service inquiry and facility reservation - Zone 2		2	UHL	UHL4W	16.48										
	4-Wire Unbundled HDSL Loop without manual service inquiry and facility reservation - Zone 3		3	UHL	UHL4W	19.37										
4-WIRE DS1 DIGITAL LOOP																
	4-Wire DS1 Digital Loop - Zone 1		1	USL	USLXX	91.44										
	4-Wire DS1 Digital Loop - Zone 2		2	USL	USLXX	156.40										
	4-Wire DS1 Digital Loop - Zone 3		3	USL	USLXX	263.52										
HIGH CAPACITY UNBUNDLED LOCAL LOOP																
	High Capacity Unbundled Local Loop - DS3 - Per Mile per month			UE3	1L5ND	14.10										
	High Capacity Unbundled Local Loop - DS3 - Facility Termination per month			UE3	UE3PX	352.31										
	High Capacity Unbundled Local Loop - STS-1 - Per Mile per month			UDLSX	1L5ND	14.10										
	High Capacity Unbundled Local Loop - STS-1 - Facility Termination per month			UDLSX	UDLS1	360.51										
UNBUNDLED DEDICATED TRANSPORT																
INTEROFFICE CHANNEL - DEDICATED TRANSPORT																
	Interoffice Channel - Dedicated Channel - DS1 - Per Mile per month			U1TD1	1L5XX	0.39										
	Interoffice Channel - Dedicated Tranport - DS1 - Facility Termination			U1TD1	U1TF1	88.71										
	Interoffice Channel - Dedicated Transport - DS3 - Per Mile per month			U1TD3	1L5XX	9.22										
	Interoffice Channel - Dedicated Transport - DS3 - Facility Termination per month			U1TD3	U1TF3	1012.75										
	Interoffice Channel - Dedicated Transport - STS-1 - Per Mile per month			U1TS1	1L5XX	9.22										
	Interoffice Channel - Dedicated Transport - STS-1 - Facility Termination			U1TS1	U1TFS	1012.63										
UNBUNDLED DARK FIBER																
	Dark Fiber - Interoffice Transport, Per Four Fiber Strands, Per Route Mile Or Fraction Thereof			UDF, UDFCX	1L5DF	41.87										
ENHANCED EXTENDED LINK (EELs)																

UNBUNDLED NETWORK ELEMENTS - South Carolina														Attachment: 2 Exh. B			
CATEGORY		RATE ELEMENTS	Interim	Zone	BCS	USOC	RATES ($)					Svc Order Submitted Elec per LSR	Svc Order Submitted Manually per LSR	Incremental Charge - Manual Svc Order vs. Electronic-1st	Incremental Charge - Manual Svc Order vs. Electronic-Add'l	Incremental Charge - Manual Svc Order vs. Electronic-Disc 1st	Incremental Charge - Manual Svc Order vs. Electronic-Disc Add'l
							Rec	Nonrecurring		Nonrecurring Disconnect		OSS Rates ($)					
								First	Add'l	First	Add'l	SOMEC	SOMAN	SOMAN	SOMAN	SOMAN	SOMAN
	NOTE: The monthly recurring and non-recurring charges below will apply and the Switch-As-Is Charge will not apply for UNE combinations provisioned as ' Ordinarily Combined' Network Elements.																
	NOTE: The monthly recurring and the Switch-As-Is Charge and not the non-recurring charges below will apply for UNE combinations provisioned as ' Currently Combined' Network Elements.																
	EXTENDED 4-WIRE DS1 DIGITAL EXTENDED LOOP WITH DEDICATED DS1 INTEROFFICE TRANSPORT																
		4-Wire DS1 Digital Loop in Combination - Zone 1		1	UNC1X	USLXX	104.50										
		4-Wire DS1 Digital Loop in Combination - Zone 2		2	UNC1X	USLXX	178.74										
		4-Wire DS1 Digital Loop in Combination - Zone 3		3	UNC1X	USLXX	301.17										
		Interoffice Transport - Dedicated - DS1 combination - Per Mile per month			UNC1X	1L5XX	0.31										
		Interoffice Transport - Dedicated - DS1 combination - Facility Termination per month			UNC1X	U1TF1	88.71										
	EXTENDED DS3 DIGITAL EXTENDED LOOP WITH DEDICATED DS3 INTEROFFICE TRANSPORT																
		DS3 Local Loop in combination - per mile per month			UNC3X	1L5ND	14.10										
		DS3 Local Loop in combination - Facility Termination per month			UNC3X	UE3PX	352.31										
		Interoffice Transport - Dedicated - DS3 - Per Mile per month			UNC3X	1L5XX	9.22										
		Interoffice Transport - Dedicated - DS3 combination - Facility Termination per month			UNC3X	U1TF3	1012.75										
	EXTENDED STS-1 DIGITAL EXTENDED LOOP WITH DEDICATED STS-1 INTEROFFICE TRANSPORT																
		STS-1 Local Loop in combination - per mile per month			UNCSX	1L5ND	14.10										
		STS-1 Local Loop in combination - Facility Termination per month			UNCSX	UDLS1	360.51										
		Interoffice Transport - Dedicated - STS-1 combination - per mile per month			UNCSX	1L5XX	9.22										
		Interoffice Transport - Dedicated - STS-1 combination - Facility Termination per month			UNCSX	U1TFS	1012.63										

Attachment 3

Network Interconnection

TABLE OF CONTENTS

1 General 3

2 Definitions: (For the purpose of this Attachment) 3

3 Network Interconnection 5

4 Interconnection Trunk Group Architectures 7

5 Network Design And Management For Interconnection 13

6 Forecasting for Trunk Provisioning 14

7 Local Dialing Parity 16

8 Interconnection Compensation 16

9 Ordering Charges 22

10 Basic 911 and E911 Interconnection 22

11 SS7 23

Rates **Exhibit A**
Basic Architecture **Exhibit B**
One Way Architecture **Exhibit C**
Two Way Architecture **Exhibit D**
Supergroup Architecture **Exhibit E**

NETWORK INTERCONNECTION

1 General

1.1 The Parties shall provide interconnection with each other's networks for the transmission and routing of telephone exchange service (Local Traffic), ISP-Bound Traffic, and exchange access (Switched Access Traffic) on the following terms:

2 Definitions: (For the purpose of this Attachment)

For purposes of this attachment only, the following terms shall have the definitions set forth below:

2.1 **Automatic Location Identification (ALI)** is a feature by which the address associated with the calling party's telephone number (ANI) is forwarded to the PSAP for display. Access to the ALI database is described in Attachment 2 to this Agreement.

2.2 **Automatic Number Identification (ANI)** corresponds to the seven-digit telephone number assigned by the serving local exchange carrier.

2.3 **AT&T Trunk Group** is defined as a one-way trunk group carrying AT&T originated traffic to be terminated by Fast Phones.

2.4 **911 Service** is as described in this Attachment.

2.5 **Call Termination** has the meaning set forth for "termination" in 47 C.F.R. § 51.701(d).

2.6 **Call Transport** has the meaning set forth for "transport" in 47 C.F.R. § 51.701(c).

2.7 **Call Transport and Termination** is used collectively to mean the switching and transport functions from the Interconnection Point to the last point of switching.

2.8 **Common (Shared) Transport** is defined as the transport of the originating Party's traffic by the terminating Party over the terminating Party's common (shared) facilities between (1) the terminating Party's tandem switch and end office switch, (2) between the terminating Party's tandem switches, and/or (3) between the terminating Party's host and remote end office switches. All switches referred herein must be entered into the The Telcordia® LERG™ Routing Guide (LERG).

2.9 **Dedicated Interoffice Facility** is defined as a switch transport facility between a Party's Serving Wire Center and the first point of switching within the LATA on the other Party's network.

2.10 **End Office Switching** is defined as the function that establishes a communications path between the trunk side and line side of the End Office switch.

2.11 **Fiber Meet** is an interconnection arrangement whereby the Parties physically interconnect their networks via an optical fiber interface at which one Party's facilities, provisioning, and maintenance responsibility begins and the other Party's responsibility ends.

2.12 **Final Trunk Group** is defined as the last choice trunk group between two (2) switches for which there is no alternate route.

2.13 **Integrated Services Digital Network User Part (ISUP)** is a message protocol to support call set-up and release for interoffice voice connections over SS7 signaling.

2.14 **Interconnection Point (IP)** is the physical telecommunications equipment interface that interconnects the networks of AT&T and Fast Phones for the exchange of telecommunications traffic between the Parties.

2.15 **IntraLATA Toll Traffic** is as defined in this Attachment.

2.16 **ISP-Bound Traffic** is as defined in this Attachment.

2.17 **Local Channel** is defined as a switched transport facility between a Party's Interconnection Point and the IP's Serving Wire Center.

2.18 **Local Traffic** is as defined in this Attachment.

2.19 **Public Safety Answering Point (PSAP)** is the answering location for 911 calls.

2.20 **Selective Routing (SR)** is a standard feature that routes an E911 call from the tandem to the designated PSAP based upon the address of the ANI of the calling party.

2.21 **Serving Wire Center (SWC)** is defined as the wire center owned by one Party from which the other Party would normally obtain dial tone for its IP.

2.22 **Signaling System 7 (SS7)/Common Channel Signaling 7 (CCS7)** is an out-of-band signaling system used to provide basic routing information, call set-up and other call termination functions. Signaling is removed from the voice channel and put on a separate data network.

2.23 **Tandem Switching** is defined as the function that establishes a communications path between two switching offices through a third switching office through the provision of trunk side to trunk side switching.

2.24 **Transit Traffic** is traffic originating on Fast Phones's network that is switched and/or transported by AT&T and delivered to a third party's network, or traffic originating on a third party's network that is switched and/or transported by AT&T and delivered to Fast Phones's network.

3 Network Interconnection

3.1 This Attachment pertains only to the provision of network interconnection where Fast Phones owns, leases from a third party or otherwise provides its own switch(es).

3.2 Network interconnection may be provided by the Parties at any technically feasible point within AT&T's network. Requests to AT&T for interconnection at points other than as set forth in this Attachment may be made through the Bona Fide Request/New Business Request (BFR/NBR) Process set forth in Attachment 11.

3.2.1 Each Party is responsible for providing, engineering and maintaining the network on its side of the IP. The IP must be located within AT&T's serving territory in the LATA in which traffic is originating. The IP determines the point at which the originating Party shall pay the terminating Party for the Call Transport and Termination of Local Traffic, ISP-Bound Traffic and IntraLATA Toll Traffic. In selecting the IP, both Parties will act in good faith and select the point that is most efficient for both Parties.

3.2.2 Pursuant to the provisions of this Attachment, the location of the initial IP in a given LATA shall be established by mutual agreement of the Parties. Subject to the requirements for installing additional IPs, as set forth below, any IPs existing prior to the Effective Date of the Agreement will be accepted as initial IPs and will not require re-grooming. When the Parties mutually agree to utilize two-way interconnection trunk groups for the exchange of Local Traffic, ISP-Bound Traffic and IntraLATA Toll Traffic between each other, the Parties shall mutually agree to the location of IP(s). If the Parties are unable to agree to a mutual initial IP, each Party, as originating Party, shall establish a single IP in the LATA for the delivery of its originated Local Traffic, ISP-Bound Traffic and IntraLATA Toll Traffic to the other Party for Call Transport and Termination by the terminating Party.

3.2.3 Additional IP(s) in a LATA may be established by mutual agreement of the Parties. Notwithstanding the foregoing, additional IP(s) in a particular LATA shall be established, at the request of either Party, when the Local Traffic and ISP-Bound Traffic exceeds eight point nine (8.9) million minutes per month for three (3) consecutive months at the proposed location of the additional IP. AT&T will not request the establishment of an IP in an AT&T Central Office where physical or virtual collocation space is not available or where AT&T fiber connectivity is not available. When the Parties agree to utilize two-way interconnection trunk groups for the exchange of Local Traffic, ISP-Bound Traffic and IntraLATA Toll Traffic the Parties must agree to the location of the IP(s).

3.3 <u>Interconnection via Dedicated Facilities</u>

3.3.1 <u>Local Channel Facilities.</u> As part of Call Transport and Termination, the originating Party may obtain Local Channel facilities from the terminating Party. The percentage of Local Channel facilities utilized for Local Traffic and

ISP-Bound Traffic shall be determined based upon the application of the Percent Local Facility (PLF) Factor as set forth in this Attachment. The charges applied to the percentage of Local Channel facilities used for Local Traffic and ISP-Bound Traffic as determined by the PLF factor are as set forth in Exhibit A. The remaining percentage of Local Channel facilities shall be billed at AT&T's intrastate Access Services Tariff or BellSouth's FCC No. 1 Tariff rates.

3.3.2 Dedicated Interoffice Facilities. As a part of Call Transport and Termination, the originating Party may obtain Dedicated Interoffice Facilities from the terminating Party. The percentage of Dedicated Interoffice Facilities utilized for Local Traffic and ISP-Bound Traffic shall be determined based upon the application of the PLF factor as set forth in this Attachment. The charges applied to the percentage of the Dedicated Interoffice Facilities used for Local Traffic and ISP-Bound Traffic as determined by the PLF factor are as set forth in Exhibit A. The remaining percentage of the Dedicated Interoffice Facilities shall be billed at AT&T's intrastate Access Services Tariff or BellSouth's FCC No. 1 Tariff rates.

3.4 Fiber Meet. Notwithstanding Sections 3.2.1, 3.2.2, and 3.2.3 above, if Fast Phones elects to establish interconnection with AT&T pursuant to a Fiber Meet Local Channel, Fast Phones and AT&T shall jointly engineer, operate and maintain a Synchronous Optical Network (SONET) transmission system by which they shall interconnect their transmission and routing of Local Traffic and ISP-Bound Traffic via a Local Channel at either the DS1 or DS3 level. The Parties shall work jointly to determine the specific transmission system. However, Fast Phones's SONET transmission system must be compatible with AT&T's equipment, and the Data Communications Channel (DCC) must be turned off.

3.4.1 Each Party, at its own expense, shall procure, install and maintain the agreed upon SONET transmission system in its network.

3.4.2 The Parties shall agree to a Fiber Meet point between the AT&T Serving Wire Center and the Fast Phones Serving Wire Center. The Parties shall deliver their fiber optic facilities to the Fiber Meet point with sufficient spare length to reach the fusion splice point for the Fiber Meet point. AT&T shall, at its own expense, provide and maintain the fusion splice point for the Fiber Meet. A building type CLLI code will be established for each Fiber Meet point. All orders for interconnection facilities from the Fiber Meet point shall indicate the Fiber Meet point as the originating point for the facility.

3.4.3 Upon verbal request by Fast Phones, AT&T shall allow Fast Phones access to the fusion splice point for the Fiber Meet point for maintenance purposes on Fast Phones's side of the Fiber Meet point.

3.4.4 Neither Party shall charge the other for its Local Channel portion of the Fiber Meet facility used exclusively for Local Traffic and ISP-Bound Traffic. The percentage of Local Channel facilities utilized for Local Traffic and ISP-Bound Traffic shall be determined based upon the application of the PLF factor as set forth in this

Attachment. The charges applied to the percentage of Local Channel facilities used for Local Traffic and ISP-Bound Traffic as determined by the PLF factor are as set forth in Exhibit A. The remaining percentage of Local Channel facilities shall be billed at AT&T's applicable access tariff rates. Charges for switched and special access services shall be billed in accordance with the applicable AT&T intrastate Access Services Tariff and or BellSouth's FCC No. 1 Tariff.

4 Interconnection Trunk Group Architectures

4.1 AT&T and Fast Phones shall establish interconnecting trunk groups and trunk group configurations between networks, including the use of one-way or two-way trunks in accordance with the following provisions set forth in this Attachment**.** For trunking purposes, traffic will be routed based on the digits dialed by the originating end user and in accordance with the LERG.

4.2 Fast Phones shall establish an interconnection trunk group(s) to at least one (1) AT&T access tandem within the LATA for the delivery of Fast Phones's originated Local Traffic, ISP-Bound Traffic and IntraLATA Toll Traffic and for the receipt and delivery of Transit Traffic. To the extent Fast Phones desires to deliver Local Traffic, ISP-Bound Traffic, IntraLATA Toll Traffic and/or Transit Traffic to AT&T access tandems within the LATA, other than the tandems(s) to which Fast Phones has established interconnection trunk groups, Fast Phones shall pay the appropriate rates for Multiple Tandem Access, as described in this Attachment.

4.2.1 Notwithstanding the forgoing, Fast Phones shall establish an interconnection trunk group(s) to all AT&T access and local tandems in the LATA where Fast Phones has homed (i.e., assigned) its NPA/NXXs. Fast Phones shall home its NPA/NXXs on the AT&T tandems that serve the exchange rate center areas to which the NPA/NXXs are assigned. The specified exchange rate center assigned to each AT&T tandem is defined in the LERG. Fast Phones shall enter its NPA/NXX access and/or local tandem homing arrangements into the LERG.

4.3 Switched access traffic will be delivered to and from IXCs based on Fast Phones's NXX access tandem homing arrangement as specified by Fast Phones in the LERG.

4.4 Any Fast Phones interconnection request that (1) deviates from the interconnection trunk group architectures as described in this Agreement, (2) affects traffic delivered to Fast Phones from an AT&T switch, and (3) requires special AT&T switch translations and other network modifications will require Fast Phones to submit a BFR/NBR via the BFR/NBR Process as set forth in Attachment 11.

4.5 Recurring and nonrecurring rates associated with interconnecting trunk groups between AT&T and Fast Phones are set forth in Exhibit A. To the extent a rate associated with the interconnecting trunk group is not set forth in Exhibit A, the

rate shall be as set forth in the appropriate AT&T intrastate Access Services Tariff or BellSouth's FCC No. 1 Tariff.

4.6 For two-way trunk groups that carry only both Parties' Local Traffic, the Parties shall be compensated at fifty percent (50%) of the nonrecurring and recurring rates for dedicated trunks and DS1 facilities. Fast Phones shall be responsible for ordering and paying for any two-way trunks carrying Transit Traffic.

4.7 All trunk groups will be provisioned as SS7 capable where technically feasible. If SS7 is not technically feasible, multi-frequency (MF) protocol signaling shall be used.

4.8 In cases where Fast Phones is also an IXC, the IXC's Feature Group D (FG D) trunk group(s) must remain separate from the local interconnection trunk group(s).

4.9 Each Party shall order interconnection trunks and trunk group including trunk and trunk group augmentations via the Access Service Request (ASR) process. A Firm Order Confirmation (FOC) shall be returned to the ordering Party, after receipt of a valid, error free ASR, within the timeframes set forth in each state's applicable Performance Measures. Notwithstanding the foregoing, blocking situations and projects shall be managed through AT&T's Carrier Interconnection Switching Center (CISC) Project Management Group and Fast Phones's equivalent trunking group, and FOCs for such orders shall be returned in the timeframes applicable to the project. A project is defined as (1) a new trunk group or (2) a request for more than one hundred ninety-two (192) trunks on a single or multiple group(s) in a given AT&T local calling area.

4.10 <u>Interconnection Trunk Groups for Exchange of Local Traffic and Transit Traffic</u>

4.10.1 Upon mutual agreement of the Parties in a joint planning meeting, the Parties shall exchange Local Traffic on two-way interconnection trunk group(s) with the quantity of trunks being mutually determined and the provisioning being jointly coordinated. Furthermore, the Parties shall agree upon the IP(s) for two-way interconnection trunk groups transporting both Parties' Local Traffic, ISP-Bound Traffic and IntraLATA Toll Traffic. Fast Phones shall order such two-way trunks via the ASR process. AT&T will use the Trunk Group Service Request (TGSR) to request changes in trunking. Furthermore, the Parties shall jointly review trunk performance and forecasts in accordance with Section 6 below. The Parties' use of two-way interconnection trunk groups for the transport of Local Traffic, ISP-Bound Traffic and IntraLATA Toll Traffic between the Parties does not preclude either Party from establishing additional one-way interconnection trunks for the delivery of its originated Local Traffic, ISP-Bound Traffic and IntraLATA Toll Traffic to the other Party. Other trunk groups for operator services, directory assistance and intercept must be established pursuant to AT&T's intrastate Access Services Tariff and/or BellSouth's FCC No. 1 Tariff.

4.10.2 AT&T Access Tandem Interconnection. AT&T Access Tandem interconnection at a single Access Tandem provides access to those End Offices subtending that access tandem (Intratandem Access). Access Tandem interconnection is available for any of the following access tandem architectures:

4.10.2.1 Basic Architecture. In the basic architecture, Fast Phones's originating Local Traffic, ISP-Bound Traffic and IntraLATA Toll Traffic and originating and terminating Transit Traffic is transported on a single two-way trunk group between Fast Phones and AT&T Access Tandem(s) within a LATA to provide Intratandem Access. This trunk group carries Transit Traffic between Fast Phones and ICOs, IXCs, other CLECs, CMRS providers that have a Meet Point Billing arrangement with AT&T, and other network providers with which Fast Phones desires to exchange traffic. This trunk group also carries Fast Phones originated Transit Traffic transiting a single AT&T Access Tandem destined to third party tandems such as an ICO tandem or other CLEC tandem. AT&T originated Local Traffic, ISP-Bound Traffic and IntraLATA Toll Traffic is transported on a separate single one-way trunk group terminating to Fast Phones. The LERG contains current routing and tandem serving arrangements. The basic Architecture is illustrated in Exhibit B.

4.10.2.2 One-Way Trunk Group Architecture. In one-way trunk group architecture, the Parties interconnect using three (3) separate trunk groups. A one-way trunk group provides Intratandem Access for Fast Phones-originated Local Traffic, ISP-Bound Traffic and IntraLATA Toll Traffic destined for AT&T end users. A second one-way trunk group carries AT&T-originated Local Traffic, ISP-Bound Traffic and IntraLATA Toll Traffic destined for Fast Phones end users. A two-way trunk group provides Intratandem Access for Fast Phones's originating and terminating Transit Traffic. This trunk group carries Transit Traffic between Fast Phones and ICOs, IXCs, other CLECs, CMRS providers that have a Meet Point Billing arrangement with AT&T, and other network providers with which Fast Phones exchanges traffic. This trunk group also carries Fast Phones originated Transit Traffic transiting a single AT&T Access Tandem destined to third party tandems such as an ICO tandem or other CLEC tandem. AT&T originated Local Traffic, ISP-Bound Traffic and IntraLATA Toll Traffic is transported on a separate single one-way trunk group terminating to Fast Phones. The LERG contains current routing and tandem serving arrangements. The one-way trunk group architecture is illustrated in Exhibit C.

4.10.2.3 Two-Way Trunk Group Architecture. The two-way trunk group Architecture establishes one (1) two-way trunk group to provide Intratandem Access for the exchange of Local Traffic, ISP-Bound Traffic and IntraLATA Toll Traffic between Fast Phones and AT&T. In addition, a separate two-way transit trunk group must be established for Fast Phones's originating and terminating Transit Traffic. This trunk group carries Transit Traffic between Fast Phones and ICOs, IXCs, other CLECs, CMRS providers that have a Meet Point Billing arrangement with AT&T, and other network providers with which Fast Phones exchanges traffic. This trunk

group also carries Fast Phones originated Transit Traffic transiting a single AT&T Access Tandem destined to third party tandems such as an ICO tandem or other CLEC tandem. AT&T originated traffic may, in order to prevent or remedy traffic blocking situations, be transported on a separate single one-way trunk group terminating to Fast Phones. However, where Fast Phones is responsive in a timely manner to AT&T's transport needs for its originated traffic, AT&T originating traffic will be placed on the two-way Local Traffic trunk group carrying ISP-Bound Traffic and IntraLATA Toll Traffic. The LERG contains current routing and tandem serving arrangements. The two-way trunk group architecture is illustrated in Exhibit D.

4.10.2.4 Supergroup Architecture. In the supergroup architecture, the Parties' Local Traffic, ISP-Bound Traffic and IntraLATA Toll Traffic and Fast Phones's Transit Traffic are exchanged on a single two-way trunk group between Fast Phones and AT&T to provide Intratandem Access to Fast Phones. This trunk group carries Transit Traffic between Fast Phones and ICOs, IXCs, other CLECs, CMRS providers that have a Meet Point Billing arrangement with AT&T, and other network providers with which Fast Phones desires to exchange traffic. This trunk group also carries Fast Phones originated Transit Traffic transiting a single AT&T Access Tandem destined to third party tandems such as an ICO tandem or other CLEC tandem. AT&T originated traffic may, in order to prevent or remedy traffic blocking situations, be transported on a separate single one-way trunk group terminating to Fast Phones. However, where Fast Phones is responsive in a timely manner to AT&T's transport needs for its originated traffic, AT&T originating traffic will be placed on the Supergroup. Other trunk groups for operator services, directory assistance, emergency services and intercept must be established pursuant to the applicable AT&T tariff if service is requested. The LERG contains current routing and tandem serving arrangements. The supergroup architecture is illustrated in Exhibit E.

4.10.2.5 Multiple Tandem Access (MTA) Interconnection

4.10.2.5.1 Where Fast Phones does not choose access tandem interconnection at every AT&T Access Tandem within a LATA, Fast Phones must utilize AT&T's MTA interconnection. To utilize MTA Fast Phones must establish an interconnection trunk group(s) at a minimum of one (1) AT&T Access Tandem within each LATA as required. AT&T will route Fast Phones's originated Local Traffic, ISP-Bound Traffic and IntraLATA Toll Traffic for LATA wide transport and termination. Fast Phones must also establish an interconnection trunk group(s) at all AT&T Access Tandems where Fast Phones NXXs are homed as described in Section 4.2.1 above. If Fast Phones does not have NXXs homed at any particular AT&T Access Tandem within a LATA and elects not to establish an interconnection trunk group(s) at such AT&T Access Tandem, Fast Phones can order MTA in each AT&T Access Tandem within the LATA where it does have an interconnection trunk group(s) and AT&T will terminate Fast Phones's Local Traffic, ISP-Bound Traffic and IntraLATA Toll Traffic to end users served through those AT&T

Access Tandems where Fast Phones does not have an interconnection trunk group(s). MTA shall be provisioned in accordance with AT&T's Ordering Guidelines.

4.10.2.5.2 Fast Phones may also utilize MTA to route its originated Transit Traffic; provided, however, that MTA may not be utilized to route switched access traffic that transits the AT&T network to an IXC. Switched access traffic originated by or terminated to Fast Phones will be delivered to and from IXCs based on Fast Phones's NXX access tandem homing arrangement as specified by Fast Phones in the LERG.

4.10.2.5.3 Compensation for MTA shall be at the applicable tandem switching and transport charges specified in Exhibit A and shall be billed in addition to any Call Transport and Termination charges.

4.10.2.5.4 To the extent Fast Phones does not purchase MTA in a LATA served by multiple Access Tandems, Fast Phones must establish an interconnection trunk group(s) to every Access Tandem in the LATA to serve the entire LATA. To the extent Fast Phones routes its traffic in such a way that utilizes AT&T's MTA service without properly ordering MTA, Fast Phones shall pay AT&T the associated MTA charges.

4.10.3 <u>Local Tandem Interconnection</u>

4.10.3.1 Local Tandem Interconnection arrangement allows Fast Phones to establish an interconnection trunk group(s) at AT&T local tandems for: (1) the delivery of Fast Phones-originated Local Traffic and ISP-Bound Traffic transported and terminated by AT&T to AT&T End Offices served by those AT&T local tandems, and (2) for local Transit Traffic transported by AT&T for third party network providers who have also established an interconnection trunk group(s) at those AT&T local tandems.

4.10.3.2 When a specified local calling area is served by more than one (1) AT&T local tandem, Fast Phones must designate a "home" local tandem for each of its assigned NPA/NXXs and establish trunk connections to such local tandems. Additionally, Fast Phones may choose to establish an interconnection trunk group(s) at the AT&T local tandems where it has no codes homing but is not required to do so. Fast Phones may deliver Local Traffic and ISP-Bound Traffic to a "home" AT&T local tandem that is destined for other AT&T or third party network provider end offices subtending other AT&T local tandems in the same local calling area where Fast Phones does not choose to establish an interconnection trunk group(s). It is Fast Phones's responsibility to enter its own NPA/NXX local tandem homing arrangements into the LERG either directly or via a vendor in order for other third party network providers to determine appropriate traffic routing to Fast Phones's codes. Likewise, Fast Phones shall obtain its routing information from the LERG.

4.10.3.3 Notwithstanding establishing an interconnection trunk group(s) to AT&T's local tandems, Fast Phones must also establish an interconnection trunk group(s) to AT&T Access Tandems within the LATA on which Fast Phones has NPA/NXXs homed for the delivery of Interexchange Carrier Switched Access and toll traffic, and traffic to Type 2A CMRS connections located at the Access Tandems. AT&T shall not switch SWA traffic through more than one AT&T access tandem. SWA, Type 2A CMRS or toll traffic routed to the local tandem in error will not be backhauled to the AT&T Access Tandem for completion. (Type 2A CMRS interconnection is defined in Section A35 of AT&T's GSST).

4.10.3.4 AT&T's provisioning of Local Tandem Interconnection assumes that Fast Phones has executed the necessary local interconnection agreements with the other third party network providers subtending those local tandems as required by the Act.

4.10.4 Direct End Office-to-End Office Interconnection

4.10.4.1 Direct End Office-to-End Office one-way or two-way interconnection trunk groups allow for the delivery of a Party's originating Local Traffic, ISP-Bound Traffic and IntraLATA Toll Traffic to the terminating Party on a direct end office-to-end office basis.

4.10.4.2 The Parties shall utilize direct end office-to-end office trunk groups under any one (1) of the following conditions:

4.10.4.2.1 Tandem Exhaust. If a tandem through which the Parties are interconnected is unable to, or is forecasted to be unable to support additional traffic loads for any period of time, the Parties will mutually agree on an end office trunking plan that will alleviate the tandem capacity shortage and ensure completion of traffic between Fast Phones and AT&T.

4.10.4.2.2 Traffic Volume. To the extent either Party has the capability to measure the amount of traffic between Fast Phones's switch and an AT&T End Office and where such traffic exceeds or is forecasted to exceed a single DS1 of traffic per month, then the Parties shall install and retain direct end office trunking sufficient to handle such traffic volumes. Either Party will install additional capacity between such points when overflow traffic exceeds or is forecasted to exceed a single DS1 of traffic per month. In the case of one-way trunking, additional trunking shall only be required by the Party whose trunking has achieved the preceding usage threshold.

4.10.4.2.3 Mutual Agreement. The Parties may install direct end office trunking upon mutual agreement in the absence of conditions (1) or (2) above.

4.10.5 Transit Traffic Trunk Group

4.10.5.1 Transit Traffic trunks can either be two-way trunks or two (2) one-way trunks ordered by Fast Phones to deliver and receive Transit Traffic. Establishing Transit

Traffic trunks at AT&T Access and Local Tandems provides Intratandem Access to the third parties also interconnected at those tandems. Fast Phones shall be responsible for all recurring and nonrecurring charges associated with Transit Traffic trunks and facilities.

4.10.5.2 Toll Free Traffic

4.10.5.2.1 If Fast Phones chooses AT&T to perform the Service Switching Point (SSP) Function (i.e., handle Toll Free database queries) from AT&T's switches, all Fast Phones originating Toll Free traffic will be routed over the Transit Traffic Trunk Group and shall be delivered using GR-394 format. Carrier Code "0110" and Circuit Code (to be determined for each LATA) shall be used for all such calls.

4.10.5.2.2 Fast Phones may choose to perform its own Toll Free database queries from its switch. In such cases, Fast Phones will determine the nature (local/intraLATA/interLATA) of the Toll Free call (local/IntraLATA/InterLATA) based on the response from the database. If the call is an AT&T local or intraLATA Toll Free call, Fast Phones will route the post-query local or IntraLATA converted ten (10)-digit local number to AT&T over the local or intraLATA trunk group. If the call is a third party (ICO, IXC, CMRS or other CLEC) local or intraLATA Toll Free call, Fast Phones will route the post-query local or intraLATA converted ten (10)-digit local number to AT&T over the Transit Traffic Trunk Group and Fast Phones shall provide to AT&T a Toll Free billing record when appropriate. If the query reveals the call is an interLATA Toll Free call, Fast Phones will route the post-query interLATA Toll Free call (1) directly from its switch for carriers interconnected with its network or (2) over the Transit Traffic Trunk Group to carriers that are not directly connected to Fast Phones's network but that are connected to AT&T's Access Tandem.

4.10.5.2.3 All post-query Toll Free calls for which Fast Phones performs the SSP function, if delivered to AT&T, shall be delivered using GR-394 format for calls destined to IXCs, and GR-317 format for calls destined to end offices that directly subtend an AT&T Access Tandem within the LATA.

5 Network Design And Management For Interconnection

5.1 Network Management and Changes. The Parties will exchange toll-free maintenance contact numbers and escalation procedures. The Parties will provide public notice of network changes in accordance with applicable federal and state rules and regulations.

5.2 Interconnection Technical Standards. The interconnection of all networks will be based upon accepted industry/national guidelines for transmission standards and traffic blocking criteria. Interconnecting facilities shall conform, at a minimum, to the telecommunications industry standard of DS1 pursuant to Telcordia Standard No. GR-NWT-00499. Where Fast Phones chooses to utilize SS7 signaling, also known as CCS7, SS7 connectivity is required between the Fast Phones switch and

the AT&T STP. AT&T will provide SS7 signaling using Common Channel Signaling Access Capability in accordance with the technical specifications set forth in the AT&T Guidelines to Technical Publication, GR-905-Core. Facilities of each Party shall provide the necessary on-hook, off-hook answer and disconnect supervision and shall provide calling number ID (Calling Party Number) when technically feasible.

5.3 Network Management Controls. Both Parties will work cooperatively to apply sound network management principles by invoking appropriate network management controls (e.g., call gapping) to alleviate or prevent network congestion.

6 Forecasting for Trunk Provisioning

6.1 Within six (6) months after execution of this Agreement, Fast Phones shall provide an initial interconnection trunk group forecast for each LATA in which it plans to provide service within AT&T's Southeast region. Upon receipt of Fast Phones's forecast, the Parties shall conduct a joint planning meeting to develop a joint interconnection trunk group forecast. Each forecast provided under this Section shall be deemed Confidential Information under the General Terms and Conditions.

6.1.1 At a minimum, the forecast shall include the projected quantity of Transit Trunks, Fast Phones-to-AT&T one-way trunks (Fast Phones Trunks), AT&T-to-Fast Phones one-way trunks (AT&T Trunk Groups) and/or two-way interconnection trunks, if the Parties have agreed to interconnect using two-way trunking to transport the Parties' Local Traffic, ISP-Bound Traffic and IntraLATA Toll Traffic. The quantities shall be projected for a minimum of six (6) months and shall include an estimate of the current year plus the next two (2) years total forecasted quantities. The Parties shall mutually develop AT&T Trunk Groups and/or two-way interconnection trunk forecast quantities.

6.1.2 All forecasts shall include, at a minimum, Access Carrier Terminal Location (ACTL), trunk group type (e.g., local/intraLATA toll, Transit, Operator Services, 911, etc.), A location/Z location (CLLI codes for Fast Phones location and AT&T location where the trunks shall terminate), interface type (e.g., DS1), Direction of Signaling, Trunk Group Number, if known, (commonly referred to as the 2-6 code) and forecasted trunks in service each year (cumulative).

6.2 Once initial interconnection trunk forecasts have been developed, Fast Phones shall continue to provide interconnection trunk forecasts at mutually agreeable intervals. Fast Phones shall use its best efforts to make the forecasts as accurate as possible based on reasonable engineering criteria. The Parties shall continue to develop Reciprocal Trunk Group and/or two-way interconnection trunk forecasts as described in Section 6.1.1 above.

6.3 The submission and development of interconnection trunk forecasts shall not replace the ordering process for local interconnection trunks. Each Party shall

exercise its best efforts to provide the quantity of interconnection trunks mutually forecasted. However, the provision of the forecasted quantity of interconnection trunks is subject to trunk terminations and facility capacity existing at the time the trunk order is submitted. Furthermore, the receipt and development of trunk forecasts does not imply any liability for failure to perform if capacity (trunk terminations or facilities) is not available for use at the forecasted time.

6.4 Trunk Utilization

6.4.1 For the AT&T Trunk Groups that are Final Trunk Groups (AT&T Final Trunk Groups), AT&T and Fast Phones shall monitor traffic on each AT&T Final Trunk Group that is ordered and installed. The Parties agree that the AT&T Final Trunk Groups will be utilized at sixty percent (60%) of the time consistent busy hour utilization level within ninety (90) days of installation. The Parties agree that the AT&T Final Trunk Groups will be utilized at eighty percent (80%) of the time consistent busy hour utilization level within one hundred eighty (180) days of installation. Any AT&T Final Trunk Group not meeting the minimum thresholds set forth in this Section are defined as "under-utilized" trunks. Subject to Section 6.4.2 below, AT&T may disconnect any under-utilized AT&T Final Trunk Groups and Fast Phones shall refund to AT&T the associated nonrecurring and recurring trunk and facility charges paid by AT&T, if any.

6.4.2 AT&T's CISC will notify Fast Phones of any under-utilized AT&T Trunk Groups and the number of such trunk groups that AT&T wishes to disconnect. AT&T will provide supporting information either by email or facsimile to the designated Fast Phones interface. Fast Phones will provide concurrence with the disconnection in seven (7) business days or will provide specific information supporting why the trunks should not be disconnected. Such supporting information should include expected traffic volumes (including traffic volumes generated due to Local Number Portability) and the timeframes within which Fast Phones expects to need such trunks. AT&T's CISC Project Manager and Circuit Capacity Manager (CCM) will discuss the information with Fast Phones to determine if agreement can be reached on the number of AT&T Final Trunk Groups to be removed. If no agreement can be reached, AT&T will issue disconnect orders to Fast Phones. The due date of these orders will be four (4) weeks after Fast Phones was first notified in writing of the underutilization of the trunk groups.

6.4.3 To the extent that any interconnection trunk group is utilized at a time-consistent busy hour of eighty percent (80%) or greater, the Parties may review the trunk groups and, if necessary, shall negotiate in good faith for the installation of augmented facilities.

6.4.4 For the two-way trunk groups, AT&T and Fast Phones shall monitor traffic on each interconnection trunk group that is ordered and installed. The Parties agree that within ninety (90) days of the installation of the AT&T two-way trunk or

trunks, the trunks will be utilized at 60 percent (60%) of the time consistent busy hour utilization level. The Parties agree that within one hundred eighty (180) days of the installation of a trunk or trunks, the trunks will be utilized at eighty percent (80%) of the time consistent busy hour utilization level. Any trunk or trunks not meeting the minimum thresholds set forth in this Section are defined as "under-utilized" trunks. AT&T will request the disconnection of any under-utilized two-way trunk(s) and Fast Phones shall refund to AT&T the associated nonrecurring and recurring trunk and facility charges paid by AT&T, if any.

6.4.4.1 AT&T's CISC will notify Fast Phones of any under-utilized two-way trunk groups and the number of trunks that AT&T wishes to disconnect. AT&T will provide supporting information either by email or facsimile to the designated Fast Phones interface. Fast Phones will provide concurrence with the disconnection in seven (7) business days or will provide specific information supporting why the two-way trunks should not be disconnected. Such supporting information should include expected traffic volumes (including traffic volumes generated due to Local Number Portability) and the timeframes within which Fast Phones expects to need such trunks. AT&T's CISC Project Manager and CCM will discuss the information with Fast Phones to determine if agreement can be reached on the number of trunks to be removed. If no agreement can be reached, Fast Phones will issue disconnect orders to AT&T. The due date of these orders will be four (4) weeks after Fast Phones was first notified in writing of the under-utilization of the trunk groups.

6.4.4.2 To the extent that any interconnection trunk group is utilized at a time-consistent busy hour of eighty percent (80%) or greater, the Parties may review the trunk groups and, if necessary, shall negotiate in good faith for the installation of augmented facilities.

7 Local Dialing Parity

7.1 AT&T and Fast Phones shall provide local and toll dialing parity, as defined in FCC rules and regulations, with no unreasonable dialing delays. Dialing parity shall be provided for all originating Telecommunications Services that require dialing to route a call.

8 Interconnection Compensation

8.1 Compensation for Call Transport and Termination for Local Traffic, ISP-Bound Traffic and IntraLATA Toll Traffic

8.1.1 For the purposes of this Attachment and for intercarrier compensation for Local Traffic exchanged between the Parties pursuant to this Attachment, Local Traffic is defined as any telephone call that originates from one Party's customer located in one exchange and terminates to the other Party's customer in either the same exchange, or other local calling area associated with the originating calling party's exchange as defined and specified in Section A3 of AT&T's GSST.

8.1.1.1 Additionally, Local Traffic includes any cross boundary, voice-to-voice intrastate, interLATA or interstate, interLATA calls established as a local call by the ruling regulatory body.

8.1.2 For purposes of this Attachment and for intercarrier compensation for ISP-Bound Traffic exchanged between the Parties, ISP-Bound Traffic is defined as calls to an information service provider or Internet Service Provider (ISP) that are dialed by using a local dialing pattern (seven (7) or ten (10) digits) by a calling party in one (1) exchange to an ISP server or modem in either the same exchange or other local calling area associated with the originating exchange as defined and specified in Section A3 of AT&T's GSST. ISP-Bound Traffic is not Local Traffic subject to reciprocal compensation, but instead is information access traffic subject to the FCC's jurisdiction.

8.1.3 Neither Party shall pay compensation to the other Party for per minute of use rate elements as set forth in Exhibit A associated with the Call Transport and Termination of Local Traffic or ISP-Bound Traffic.

8.1.4 The appropriate elemental rates set forth in Exhibit A shall apply for Transit Traffic as described in this Attachment and for MTA as described in this Attachment.

8.1.5 Neither Party shall represent Switched Access Traffic as Local Traffic or ISP-Bound Traffic for purposes of determining compensation for the call. If Fast Phones delivers Switched Access Traffic to AT&T for termination in violation of this Section, AT&T shall charge Fast Phones terminating switched access charges as set forth in AT&T's Intrastate Access Services Tariff and/or BellSouth's FCC No. 1 Tariff, as appropriate. Additionally, such delivery of traffic shall constitute improper use of AT&T facilities as set forth in Section 1.5.2 of Attachment 7 of this Agreement.

8.1.6 IntraLATA Toll Traffic is defined as all traffic, regardless of transport protocol method, that originates and terminates within a single LATA that is not Local Traffic or ISP-Bound traffic under this Attachment.

8.1.6.1 For terminating its intraLATA toll traffic on the other Party's network, the originating Party will pay the terminating Party AT&T's current intrastate or interstate, whichever is appropriate, terminating switched access tariff rates as set forth in AT&T's intrastate Access Services Tariffs and/or BellSouth's FCC No. 1 Tariff as filed and in effect with the FCC or appropriate Commission. The appropriate charges will be determined by the routing of the call. Additionally, if one (1) Party is the other Party's customer's presubscribed interexchange carrier or if one (1) Party's customer uses the other Party as an interexchange carrier on a 101XXXX basis, the originating party will charge the other Party the appropriate AT&T originating switched access tariff rates as set forth in AT&T's intrastate Access Services Tariff and/or BellSouth's FCC No. 1 Tariff as filed and in effect with the FCC or appropriate Commission.

8.1.7 If Fast Phones assigns NPA/NXXs to specific AT&T rate centers within the LATA and assigns numbers from those NPA/NXXs to Fast Phones customer physically located outside of that LATA, AT&T traffic originating from within the LATA where the NPA/NXXs are assigned and delivered to a Fast Phones customer physically located outside of such LATA, shall not be deemed Local Traffic. Further, Fast Phones agrees to identify such interLATA traffic to AT&T and to compensate AT&T for originating and transporting such interLATA traffic to Fast Phones at BellSouth's FCC No. 1 Tariff rates.

8.2 If Fast Phones does not identify such interLATA traffic to AT&T, AT&T will determine which whole Fast Phones NPA/NXXs on which to charge the applicable rates for originating network access service as reflected in AT&T's intrastate Access Services Tariff and/or BellSouth's FCC No. 1 Tariff. AT&T shall make appropriate billing adjustments if Fast Phones can provide sufficient information for AT&T to determine whether or not said traffic is Local or ISP-Bound Traffic.

8.3 Jurisdictional Reporting

8.3.1 Percent Local Use (PLU). Each Party shall report to the other a PLU factor. The application of the PLU will determine the amount of local or ISP-Bound minutes to be billed to the other Party. Each Party shall update its PLU on the first of January, April, July and October of the year and shall send it to the other Party to be received no later than thirty (30) days after the first of each such month based on local and ISP-Bound usage for the past three (3) months ending the last day of December, March, June and September, respectively. Requirements associated with PLU calculation and reporting shall be as set forth in AT&T's Jurisdictional Factors Reporting Guide.

8.3.2 Percent Local Facility (PLF). Each Party shall report to the other a PLF factor. The application of the PLF will determine the portion of switched dedicated transport to be billed per the local jurisdiction rates. The PLF shall be applied to Multiplexing, Local Channel and Interoffice Channel Switched Dedicated Transport utilized in the provision of local interconnection trunks. Each Party shall update its PLF on the first of January, April, July and October of the year and shall send it to the other Party to be received no later than thirty (30) days after the first of each such month to be effective the first bill period the following month, respectively. Requirements associated with PLF calculation and reporting shall be as set forth in AT&T's Jurisdictional Factors Reporting Guide.

8.3.3 Percent Interstate Usage (PIU). Each Party shall report to the other the projected PIU factors, including but not limited to PIU associated with facilities (PIUE) and Terminating PIU (TPIU) factors. The application of the PIU will determine the respective interstate traffic percentages to be billed at BellSouth's FCC No. 1 Tariff rates. All jurisdictional report requirements, rules and regulations for Interexchange Carriers specified in AT&T's intrastate Access Services Tariff will apply to Fast Phones. After interstate and intrastate traffic percentages have been

determined by use of PIU procedures, the PLU and PLF factors will be used for application and billing of local traffic and facilities. The intrastate toll traffic shall be billed at AT&T's intrastate Access Services Tariff rates. Each Party shall update its PIUs on the first of January, April, July and October of the year and shall send it to the other Party to be received no later than thirty (30) days after the first of each such month, for all services showing the percentages of use for the past three (3) months ending the last day of December, March, June and September. Additional requirements associated with PIU calculations and reporting shall be as set forth in AT&T's Jurisdictional Factors Reporting Guide.

8.3.4 Notwithstanding the provisions in Sections 8.3.1, 8.3.2, and 8.3.3 above, where AT&T has message recording technology that identifies the jurisdiction of traffic terminated as defined in this Agreement, such information shall, at AT&T's option, be utilized to determine the appropriate jurisdictional reporting factors (i.e., PLU, PIU, and/or PLF), in lieu of those provided by Fast Phones. In the event that AT&T opts to utilize its own data to determine jurisdictional reporting factors, AT&T shall notify Fast Phones at least fifteen (15) days prior to the beginning of the calendar quarter in which AT&T will begin to utilize its own data.

8.3.5 Audits. On thirty (30) days written notice, Fast Phones must provide AT&T the ability and opportunity to conduct an annual audit to ensure the proper billing of traffic. Fast Phones shall retain records of call detail for a minimum of nine (9) months from which the PLU, PLF and/or PIU can be ascertained. The audit shall be conducted during normal business hours at an office designated by Fast Phones. Audit requests shall not be submitted more frequently than one (1) time per calendar year. Audits shall be performed by an independent auditor chosen by AT&T. The audited factor (PLF, PLU and/or PIU) shall be adjusted based upon the audit results and shall apply to the usage for the audited period through the time period when the audit is completed, to the usage for the quarter prior to the audit period, and to the usage for the two (2) quarters following the completion of the audit. If, as a result of an audit, Fast Phones is found to have overstated the PLF, PLU and/or PIU by twenty percentage points (20%) or more, Fast Phones shall reimburse AT&T for the cost of the audit.

8.4 Compensation for IntraLATA 8XX Traffic. Fast Phones shall pay the appropriate switched access charges set forth in the AT&T's intrastate Access Services tariff and/or BellSouth's FCC No. 1 Tariff. Fast Phones will pay AT&T the database query charge as set forth in the applicable AT&T intrastate Access Services Tariff and/or BellSouth's FCC No. 1 Tariff. Fast Phones will be responsible for any applicable Common Channel Signaling (SS7) charges.

8.4.1 Records for 8XX Billing. Where technically feasible, each Party will provide to the other Party the appropriate records, in accordance with industry standards, necessary for billing intraLATA 8XX providers. The records provided will be in a standard EMI format.

8.4.2 8XX Toll Free Dialing Ten Digit Screening Service (8XX TFD). AT&T's provision of 8XX TFD to Fast Phones requires interconnection from Fast Phones to AT&T's 8XX Signal Channel Point. Such interconnections shall be established pursuant to AT&T's Common Channel Signaling Interconnection Guidelines and Telcordia's CCS Network Interface Specification document, TR-TSV-000905. Fast Phones shall establish SS7 interconnection at the AT&T LSTPs serving the AT&T 8XX Signal Channel Points that Fast Phones desires to query. The terms and conditions for 8XX TFD are set out in the appropriate AT&T Access Services Tariff.

8.5 Mutual Provision of Switched Access Service

8.5.1 Switched Access Traffic. Switched Access Traffic is described as telephone calls requiring local transmission or switching services for the purpose of the origination or termination of Telephone Toll Service. Switched Access Traffic includes, but is not limited to, the following types of traffic: Feature Group A, Feature Group B, Feature Group C, Feature Group D, toll free access (e.g., 8XX), 900 access and their successors. Additionally, any PSTN interexchange telecommunications traffic, regardless of transport protocol method, where the originating and terminating points, end-to-end points, are in different LATAs, or are in the same LATA and the Parties' Switched Access services are used for the origination or termination of the call, shall be considered Switched Access Traffic. Irrespective of transport protocol method or method of originating or terminating the call, a call that originates in one LATA and terminates in another LATA (i.e., the end-to-end points of the call) or a call in which the Parties' Switched Access Services are used for the origination or termination of the call, shall be considered Switched Access Traffic.

8.5.2 If an AT&T end user chooses Fast Phones as their presubscribed interexchange carrier, or if an AT&T end user uses Fast Phones as an interexchange carrier on a 101XXXX basis, AT&T will charge Fast Phones the appropriate AT&T tariff charges for originating switched access services.

8.5.3 Where the originating Party delivers a call to the terminating Party over switched access facilities, the originating Party will pay the terminating Party terminating, switched access charges as set forth in AT&T's intrastate Access Services Tariff and/or BellSouth's FCC No. 1 Tariff, as appropriate.

8.5.4 When Fast Phones's end office switch provides an access service connection to or from an IXC by a direct trunk group to the IXC utilizing AT&T facilities, each Party will provide its own access services to the IXC and bill on a multi-bill, multi-tariff meet-point basis. Each Party will bill its own access services rates to the IXC with the exception of the interconnection charge. The interconnection charge will be billed by Fast Phones as the Party providing the end office function. Each party will use the Multiple Exchange Carrier Access Billing (MECAB) guidelines to

establish Meet Point Billing for all applicable traffic. The Parties shall utilize a thirty (30) day billing period.

8.5.4.1 Fast Phones must have a unique hosted Revenue Accounting Office (RAO) code where Fast Phones's end office subtends the AT&T Access Tandem switch for receipt or delivery of switched access traffic and provides an access service connection to or from an IXC via AT&T's Access Tandem switch, AT&T, as the tandem company agrees to provide to Fast Phones, as the End Office Company, as defined in MECAB, at no charge, all the switched access detail usage data, recorded at the access tandem, within no more than sixty (60) days after the recording date. Each Party will notify the other when it is not feasible to meet these requirements. As business requirements change, data reporting requirements may be modified as necessary.

8.5.5 AT&T, as the tandem provider company, will retain for a minimum period of sixty (60) days, access message detail sufficient to recreate any data that is lost or damaged by the tandem provider company or any third party involved in processing or transporting data.

8.5.6 Fast Phones shall not deliver switched access traffic to AT&T for termination over any trunks and facilities other than Fast Phones ordered switched access trunks and facilities.

8.6 Transit Traffic

8.6.1 AT&T shall provide tandem switching and transport services for Fast Phones's Transit Traffic. Rates for local Transit Traffic and ISP-Bound Transit Traffic shall be the applicable rate elements for Tandem Switching, Common Transport and Tandem Intermediary Charge as set forth in Exhibit A. Rates for Switched Access Transit Traffic shall be the applicable charges as set forth in AT&T's intrastate Access Services Tariff and/or BellSouth's FCC No. 1 Tariff. Billing associated with all Transit Traffic shall be pursuant to MECAB guidelines. Traffic between Fast Phones and Wireless Type 1 third parties or Wireless Type 2A third parties that do not engage in Meet Point Billing with AT&T shall not be treated as Transit Traffic from a routing or billing perspective until such time as such traffic is identifiable as Transit Traffic.

8.6.2 The delivery of traffic that transits the AT&T network is excluded from any AT&T billing guarantees. AT&T agrees to deliver Transit Traffic to the terminating carrier; provided, however, that Fast Phones is solely responsible for negotiating and executing any appropriate contractual agreements with the terminating carrier for the exchange of Transit Traffic through the AT&T network. AT&T will not be liable for any compensation to the terminating carrier or to Fast Phones. In the event that the terminating third party carrier imposes on AT&T any charges or costs for the delivery of Transit Traffic, Fast Phones shall reimburse AT&T for such charges or costs.

8.7 For purposes of intercarrier compensation, AT&T will not be responsible for any compensation associated with the exchange of traffic between Fast Phones and a CLEC utilizing AT&T switching. Where technically feasible, AT&T will use commercially reasonable efforts to provide records to Fast Phones to identify those CLECs utilizing AT&T switching with whom Fast Phones has exchanged traffic. Such traffic shall not be considered Transit Traffic from a routing or billing perspective, but instead will be considered as traffic exchanged solely between Fast Phones and the CLEC utilizing AT&T switching.

8.7.1 Fast Phones is solely responsible for negotiating and executing any appropriate contractual agreements with the terminating carrier for the exchange of traffic with a CLEC utilizing AT&T switching. AT&T will not be liable for any compensation to the terminating carrier or to Fast Phones. In the event that the terminating third party carrier imposes on AT&T any charges or costs for the delivery of such traffic, Fast Phones shall reimburse AT&T for all such charges or costs.

8.8 Fast Phones shall send all IntraLATA toll traffic to be terminated by an independent telephone company to the End User's IntraLATA toll provider and shall not send such traffic to AT&T as Transit Traffic. IntraLATA toll traffic shall be any traffic that originates outside of the terminating independent telephone company's local calling area.

9 Ordering Charges

9.1 The facilities purchased pursuant to this Attachment shall be ordered via the ASR process.

9.2 The rates, terms and conditions associated with submission and processing of ASRs are as set forth in BellSouth's FCC No. 1 Tariff, Section 5.

10 Basic 911 and E911 Interconnection

10.1 Basic 911 and E911 provides a caller access to the applicable emergency service bureau by dialing 911.

10.2 Basic 911 Interconnection. AT&T will provide to Fast Phones a list consisting of each municipality that subscribes to Basic 911 service. The list will also provide, if known, the E911 conversion date for each municipality and, for network routing purposes, a ten (10) digit directory number representing the appropriate emergency answering position for each municipality subscribing to 911. Fast Phones will be required to arrange to accept 911 calls from its end users in municipalities that subscribe to Basic 911 service and translate the 911 call to the appropriate ten (10) digit directory number as stated on the list provided by AT&T. Fast Phones will be required to route that call to the appropriate PSAP. When a municipality converts to E911 service, Fast Phones will be required to begin using E911 procedures.

10.3 E911 Interconnection. Fast Phones shall install a minimum of two (2) dedicated trunks originating from its SWC and terminating to the appropriate E911 tandem. The SWC must be in the same LATA as the E911 tandem. The dedicated trunks shall be, at a minimum, DS0 level trunks configured as part of a digital (one point five forty-four (1.544) Mb/s) interface (DS1 facility). The configuration shall use CAMA-type signaling with MF pulsing or SS7/ISUP signaling either of which shall deliver ANI with the voice portion of the call. If SS7/ISUP connectivity is used, Fast Phones shall follow the procedures as set forth in Appendix A of the CLEC Users Guide to E911 for Facility Based Providers that is located on the AT&T Interconnection Web site. If the user interface is digital, MF pulses as well as other AC signals shall be encoded per the u-255 Law convention. Fast Phones will be required to provide AT&T daily updates to the E911 database. Fast Phones will be required to forward 911 calls to the appropriate E911 tandem along with ANI based upon the current E911 end office to tandem homing arrangement as provided by AT&T. If the E911 tandem trunks are not available, Fast Phones will be required to route the call to a designated seven (7) digit or ten (10) digit local number residing in the appropriate PSAP. This call will be transported over AT&T's interoffice network and will not carry the ANI of the calling party. Fast Phones shall be responsible for providing AT&T with complete and accurate data for submission to the 911/E911 database for the purpose of providing 911/E911 to its end users.

10.4 Trunks and facilities for 911 Interconnection may be ordered by Fast Phones from AT&T pursuant to the terms and conditions set forth in this Attachment.

10.5 The detailed practices and procedures for 911/E911 interconnection are contained in the E911 Local Exchange Carrier Guide For Facility-Based Providers that is located on the AT&T Interconnection Services Web site.

11 SS7

11.5 SS7 Signaling is AT&T's preferred method for signaling. Where multi-frequency signaling is currently used, the Parties agree to use their best efforts to convert to SS7. If SS7 services are provided by AT&T, AT&T will provide such services in accordance with the rates, terms and conditions set forth in the applicable access tariffs. Where multi-frequency signaling is currently used, the Parties agree to Interconnect their networks using multi-frequency ("MF") or dual tone MF ("DTMF") signaling, subject to availability at the End Office Switch or Tandem Switch at which Interconnection occurs. The Parties acknowledge that the use of MF signaling may not be optimal. AT&T will not be responsible for correcting any undesirable characteristics, service problems or performance problems that are associated with MF/SS7 inter-working or the signaling protocol required for Interconnection with CLEC employing MF signaling.

Exhibit B

Basic Architecture

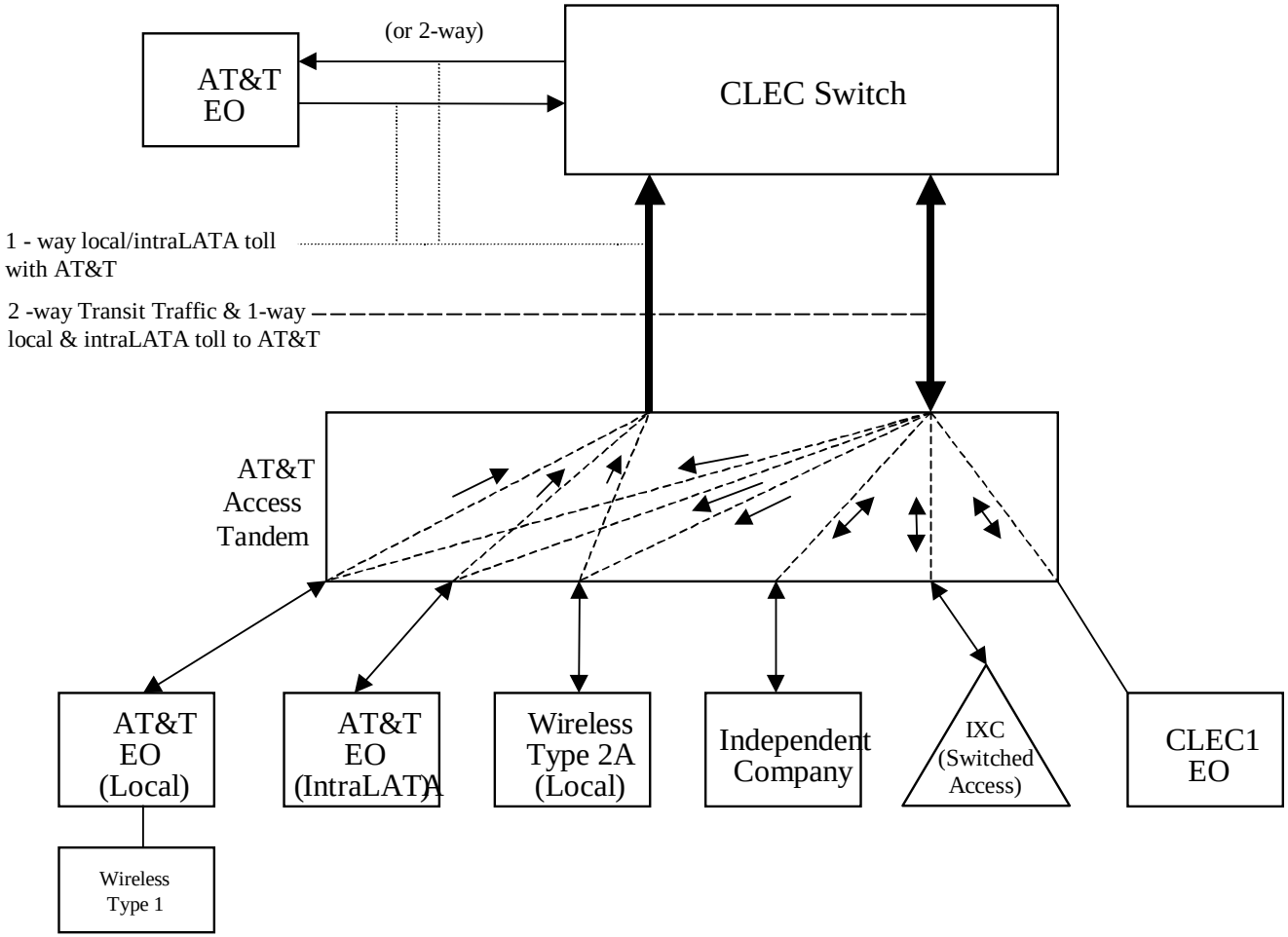

Version: 2Q0
09/18/07

Exhibit C

One-Way Architecture

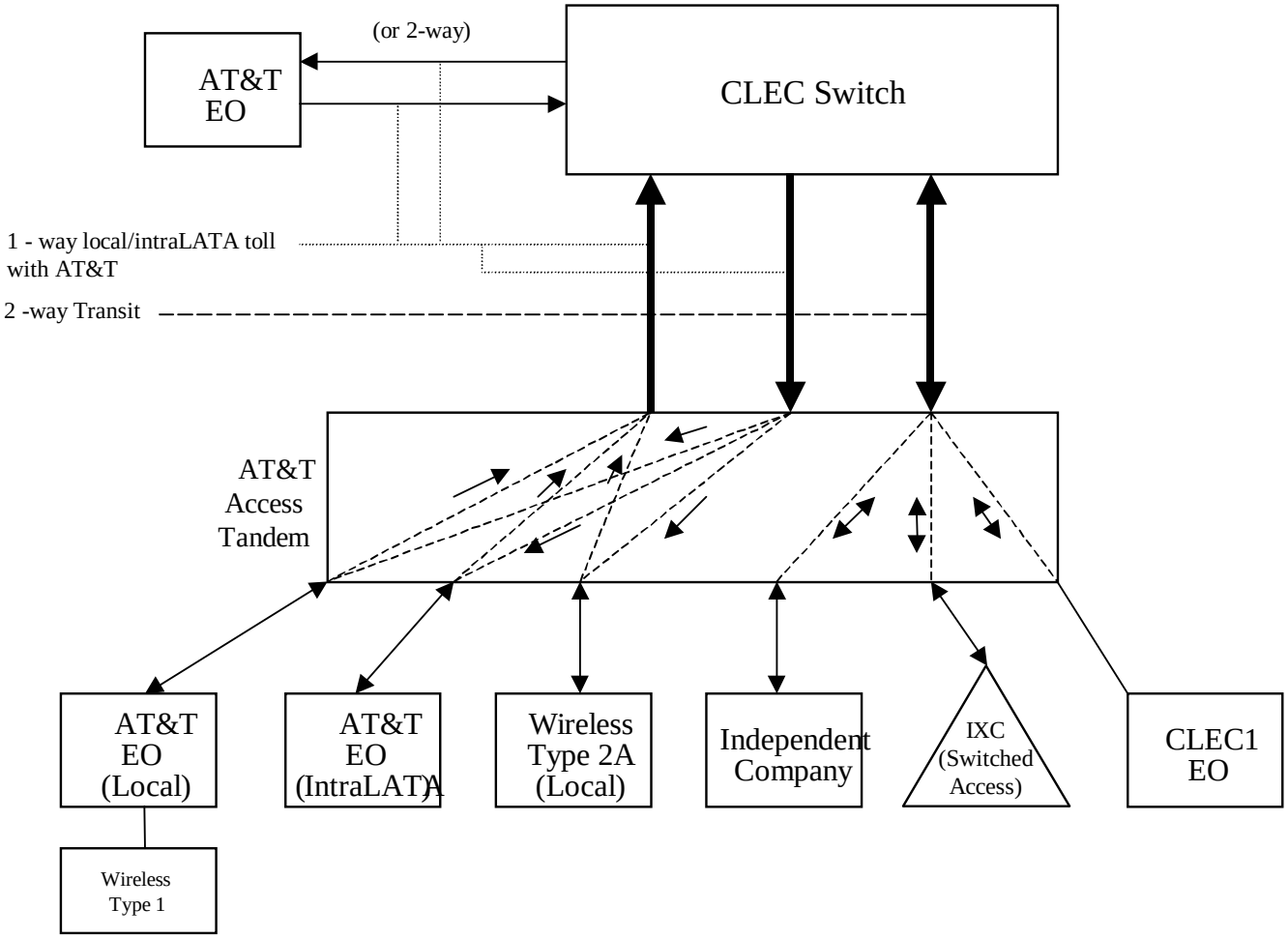

Version: 2Q0
09/18/07

Exhibit D

Two-Way Architecture

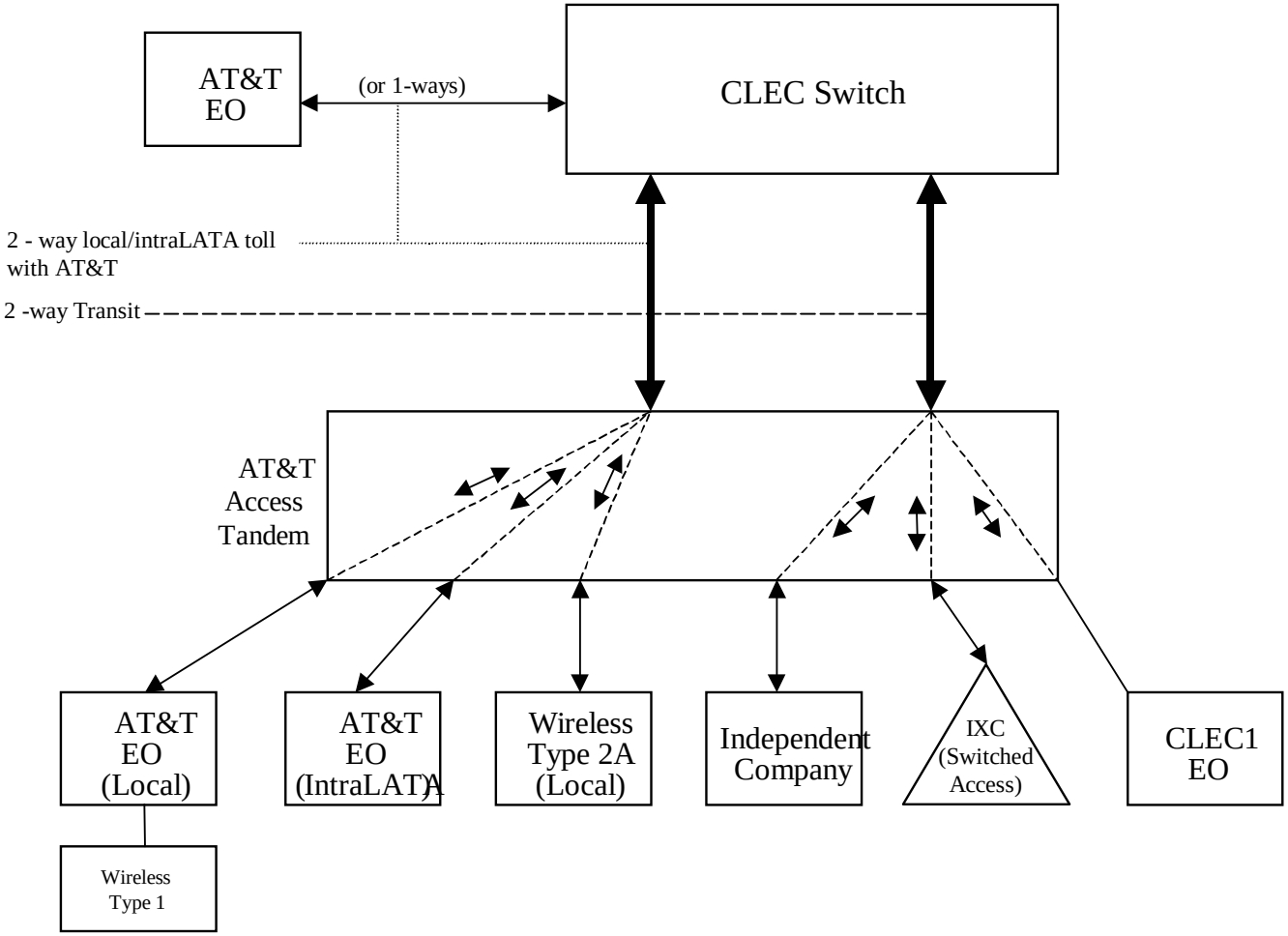

Version: 2Q0
09/18/07

Exhibit E

Supergroup Architecture

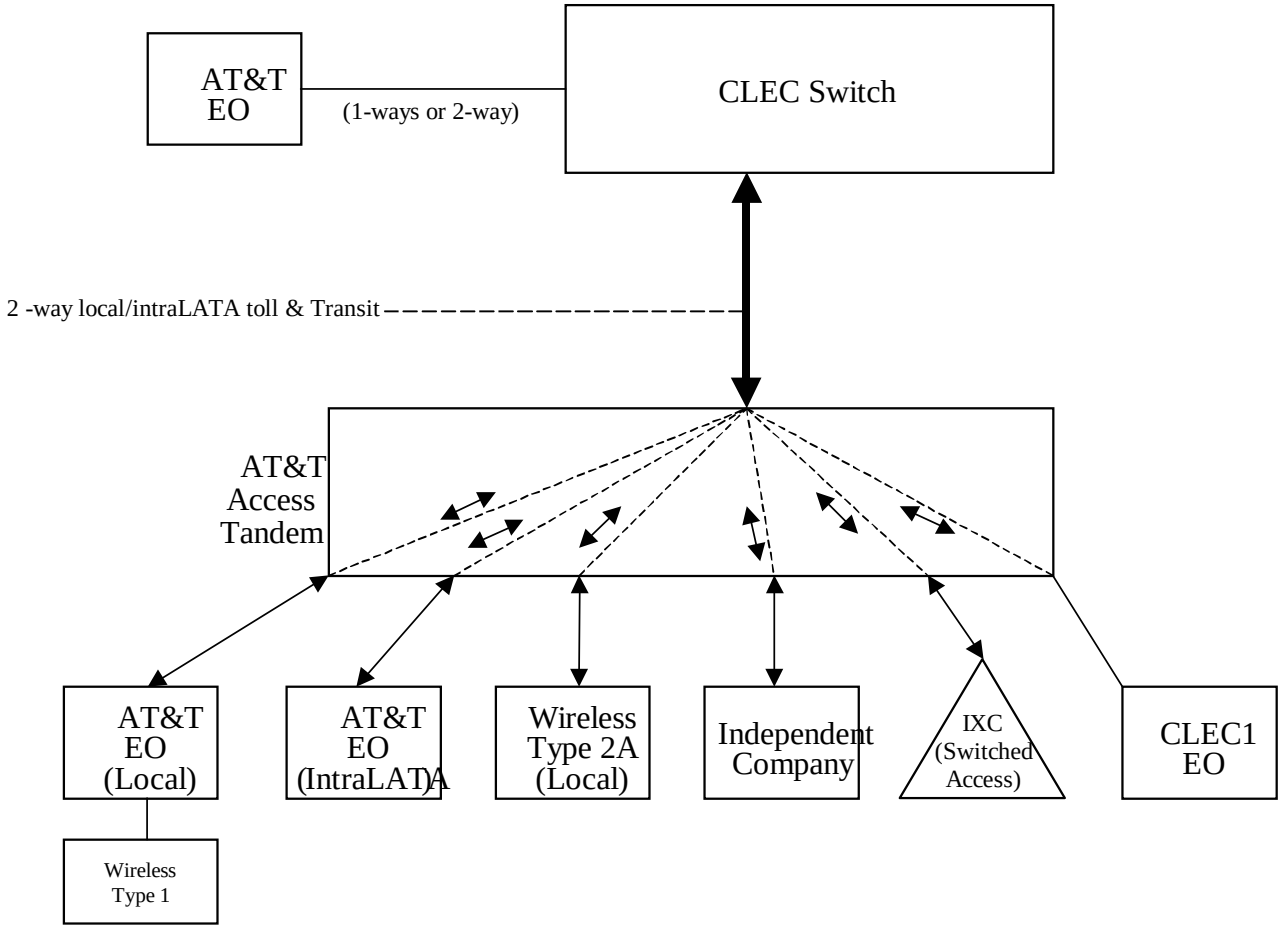

LOCAL INTERCONNECTION - South Carolina

Att: 3 Exh: A

CATEGORY	RATE ELEMENTS	Interim	Zone	BCS	USOC	RATES($) Rec	Nonrecurring First	Nonrecurring Add'l	Nonrecurring Disconnect First	Nonrecurring Disconnect Add'l	Svc Order Submitted Elec per LSR	Svc Order Submitted Manually per LSR	Incremental Charge - Manual Svc Order vs. Electronic- 1st	Incremental Charge - Manual Svc Order vs. Electronic- Add'l	Incremental Charge - Manual Svc Order vs. Electronic- Disc 1st	Incremental Charge - Manual Svc Order vs. Electronic- Disc Add'l
											OSS Rates($)					
							First	Add'l	First	Add'l	SOMEC	SOMAN	SOMAN	SOMAN	SOMAN	SOMAN
LOCAL INTERCONNECTION (CALL TRANSPORT AND TERMINATION)																
	NOTE: "bk" beside a rate indicates that the Parties have agreed to bill and keep for that element pursuant to the terms and conditions in Attachment 3.															
	TANDEM SWITCHING															
	Tandem Switching Function Per MOU					0.0007360bk										
	Multiple Tandem Switching, per MOU (applies to intial tandem only)					0.000736										
	Tandem Intermediary Charge, per MOU*					0.0025										
	Tandem Intermediary Charge, per MOU* (E:6/30/2010)					0.0025										
	*** This charge is applicable only to transit traffic and is applied in addition to applicable switching and/or interconnection charges.**															
	TRUNK CHARGE															
	Installation Trunk Side Service - per DS0			OHD	TPP6X		21.65	8.16								
	Installation Trunk Side Service - per DS0			OHD	TPP9X		21.65	8.16								
	Dedicated End Office Trunk Port Service-per DS0**			OHD	TDEOP	0.00										
	Dedicated End Office Trunk Port Service-per DS1**			OH1 OH1MS	TDE1P	0.00										
	Dedicated Tandem Trunk Port Service-per DS0**			OHD	TDWOP	0.00										
	Dedicated Tandem Trunk Port Service-per DS1**			OH1 OH1MS	TDW1P	0.00										
	**** This rate element is recovered on a per MOU basis and is included in the End Office Switching and Tandem Switching, per MOU rate elements**															
	COMMON TRANSPORT (Shared)															
	Common Transport - Per Mile, Per MOU					0.0000045bk										
	Common Transport - Facilities Termination Per MOU					0.0004095bk										
LOCAL INTERCONNECTION (DEDICATED TRANSPORT)																
	INTEROFFICE CHANNEL - DEDICATED TRANSPORT															
	Interoffice Channel - Dedicated Transport - 2-Wire Voice Grade - Per Mile per month			OHM	1L5NF	0.0167										
	Interoffice Channel - Dedicated Transport- 2- Wire Voice Grade - Facility Termination per month			OHM	1L5NF	24.30	40.63	27.47	16.77	6.91						
	Interoffice Channel - Dedicated Transport - 56 kbps - per mile per month			OHM	1L5NK	0.0167										
	Interoffice Channel - Dedicated Transport - 56 kbps - Facility Termination per month			OHM	1L5NK	16.76	40.63	27.47	16.77	6.91						
	Interoffice Channel - Dedicated Transport - 64 kbps - per mile per month			OHM	1L5NK	0.0167										
	Interoffice Channel - Dedicated Transport - 64 kbps - Facility Termination per month			OHM	1L5NK	16.76	40.63	27.47	16.77	6.91						
	Interoffice Channel - Dedicated Channel - DS1 - Per Mile per month			OH1, OH1MS	1L5NL	0.3415										
	Interoffice Channel - Dedicated Tranport - DS1 - Facility Termination per month			OH1, OH1MS	1L5NL	77.14	89.47	81.99	16.39	14.48						
	Interoffice Channel - Dedicated Transport - DS3 - Per Mile per month			OH3, OH3MS	1L5NM	8.02										
	Interoffice Channel - Dedicated Transport - DS3 - Facility Termination per month			OH3, OH3MS	1L5NM	880.65	279.37	163.12	60.33	58.59						
	LOCAL CHANNEL - DEDICATED TRANSPORT															
	Local Channel - Dedicated - 2-Wire Voice Grade per month			OHM	TEFV2	15.33	193.53	33.24	36.72	3.21						
	Local Channel - Dedicated - 4-Wire Voice Grade per month			OHM	TEFV4	16.54	193.97	33.68	37.19	3.68						
	Local Channel - Dedicated - DS1 per month			OH1	TEFHG	42.62	177.87	154.06	22.24	15.30						
	Local Channel - Dedicated - DS3 Facility Termination per month			OH3	TEFHJ	446.00	452.52	264.53	119.75	83.77						
	LOCAL INTERCONNECTION MID-SPAN MEET															
	Local Channel - Dedicated - DS1 per month			OH1MS	TEFHG	0.00	0.00									
	Local Channel - Dedicated - DS3 per month			OH3MS	TEFHJ	0.00	0.00									
	MULTIPLEXERS															
	Channelization - DS1 to DS0 Channel System			OH1, OH1MS	SATN1	107.57	91.24	62.71	10.56	9.81						
	DS3 to DS1 Channel System per month			OH3, OH3MS	SATNS	144.02	178.54	94.18	33.33	31.90						
	DS3 Interface Unit (DS1 COCI) per month			OH1, OH1MS	SATCO	8.64	6.59	4.73								
	Notes: If no rate is identified in the contract, the rates, terms, and conditions for the specific service or function will be as set forth in applicable AT&T tariff.															

Attachment 4

AT&T Collocation

Table of Contents

1. Scope of Attachment 3

2 Optional Reports 6

3 Collocation Options 7

4 Occupancy 12

5 Use of Collocation Space 14

6 Ordering and Preparation of Collocation Space 22

7 Construction and Provisioning 26

8 Rates and Charges 32

9 Insurance 44

10 Mechanics Lien 45

11 Inspections 46

12 Security and Safety Requirements 46

13 Destruction of Collocation Space 48

14 Eminent Domain 49

15 Nonexclusivity 49

Environmental & Safety Principles ..... Exhibit A

Rates ..... Exhibit B

Tennessee Regulatory Authority (TRA) Offered Language and Rates ..... Exhibit C

AT&T COLLOCATION

1. Scope of Attachment

1.1 AT&T Premises

1.1.1 The rates, terms and conditions contained within this Attachment shall only apply when Fast Phones is physically collocated as a sole occupant or as a Host within an AT&T Premises pursuant to this Attachment. AT&T Premises, as defined in this Attachment includes AT&T Central Offices, and Remote Terminals (hereinafter "AT&T Premises"). This Attachment is applicable to AT&T Premises owned or leased by AT&T. Where not specified, the language in this Attachment applies to both Central Office and Remote Site Collocation.

1.1.2 Third Party Property. If the AT&T Premises, or the property on which it is located, is leased by AT&T from a third party or otherwise controlled by a third party, special considerations and intervals may apply in addition to the terms and conditions of this Attachment. Additionally, where AT&T notifies Fast Phones that AT&T's agreement with a third party does not grant AT&T the ability to provide access and use rights to others, upon Fast Phones's request, AT&T will use commercially reasonable efforts to obtain the owner's consent and to otherwise secure such rights for Fast Phones. Fast Phones agrees to reimburse AT&T for all costs incurred by AT&T in obtaining such rights for Fast Phones. In cases where a third party agreement does not grant AT&T the right to provide access and use rights to others as contemplated by this Attachment and AT&T, is unable to secure such access and use rights for Fast Phones, Fast Phones shall be responsible for obtaining such permission to access and use such property. AT&T shall cooperate with Fast Phones in obtaining such permission.

1.2 Right to Occupy

1.2.1 AT&T shall offer to Fast Phones collocation on rates, terms and conditions that are just, reasonable, nondiscriminatory and consistent with the rules of the FCC. Subject to the rates, terms and conditions of this Attachment, where space is available and it is technically feasible, AT&T will allow Fast Phones to occupy a certain area designated by AT&T within an AT&T Premises, or on AT&T property upon which the AT&T Premises is located, of a size which is specified by Fast Phones and agreed to by AT&T (hereinafter "Collocation Space"). Except as otherwise specified, any references to Collocation Space shall be for physical collocation. The necessary rates, terms and conditions for a premises as defined by the FCC, other than AT&T Premises, shall be negotiated upon reasonable request for collocation at such premises.

1.2.2 Neither AT&T nor any of AT&T's affiliates may reserve space for future use on more preferential terms than those set forth in this Attachment.

1.2.2.1 In all states other than Florida, the size specified by Fast Phones may contemplate a request for space sufficient to accommodate Fast Phones's growth within a twenty-four (24) month period.

1.2.2.2 In the state of Florida, the size specified by Fast Phones may contemplate a request for space sufficient to accommodate Fast Phones's growth within an eighteen (18) month period.

1.3 Space Allocation. AT&T shall assign Fast Phones Collocation Space that utilizes existing infrastructure (e.g., heating, ventilation, air conditioning (HVAC), lighting and available power), if such space is available for collocation. Otherwise, AT&T shall attempt to accommodate Fast Phones's requested space preferences, if any, including the provision of contiguous space for any subsequent request for collocation. In allocating Collocation Space, AT&T shall not materially increase Fast Phones's cost or materially delay Fast Phones's occupation and use of the Collocation Space, assign Collocation Space that will impair the quality of service or otherwise limit the service Fast Phones wishes to offer, reduce unreasonably the total space available for physical collocation or preclude reasonable physical collocation within the AT&T Premises. Space shall not be available for collocation if it is: (a) physically occupied by non-obsolete equipment; (b) assigned to another collocated telecommunications carrier; (c) used to provide physical access to occupied space; (d) used to enable technicians to work on equipment located within occupied space; (e) properly reserved for future use, either by AT&T or another collocated telecommunications carrier; or (f) essential for the administration and proper functioning of the AT&T Premises. AT&T may segregate Collocation Space and require separate entrances for collocated telecommunications carriers to access their Collocation Space, pursuant to FCC Rules.

1.4 Transfer of Collocation Space

1.4.1 Fast Phones shall be allowed to transfer Collocation Space to another CLEC under the following conditions: (1) the AT&T Premises is not at or near space exhaustion; (2) the transfer of space shall be contingent upon AT&T's approval, which will not be unreasonably withheld; (3) Fast Phones has no unpaid, undisputed collocation charges; and (4) the transfer of the Collocation Space is in conjunction with Fast Phones's sale of all or substantially all, of the in-place collocation equipment to the same CLEC.

1.4.2 The responsibilities of Fast Phones shall include: (1) submitting a letter of authorization to AT&T for the transfer; (2) entering into a transfer agreement with AT&T and the acquiring CLEC; and (3) returning all Security Access Devices to AT&T. The responsibilities of the acquiring CLEC shall include: (1) submitting an application to AT&T for the transfer of the Collocation Space; (2) satisfying all requirements of its interconnection agreement with AT&T; (3) submitting a letter to AT&T for the assumption of services; and (4) entering into a transfer agreement with AT&T and Fast Phones.

1.4.3 In conjunction with a transfer of Collocation Space, any services associated with the Collocation Space shall be transferred pursuant to separately negotiated rates, terms and conditions.

1.5 Space Reclamation

1.5.1 In the event of space exhaust within an AT&T Premises, AT&T may include in its documentation for the Petition for Waiver filed with the Commission, any unutilized space in the AT&T Premises. Fast Phones will be responsible for the justification of unutilized space within its Collocation Space, if the Commission requires such justification.

1.5.2 AT&T may reclaim unused Collocation Space when an AT&T Premises is at, or near, space exhaustion and Fast Phones cannot demonstrate that Fast Phones will utilize the Collocation Space in the time frames set forth below in Section 1.5.3. In the event of space exhaust or near exhaust within an AT&T Premises, AT&T will provide written notice to Fast Phones requesting that Fast Phones release non-utilized Collocation Space to AT&T, when one hundred percent (100%) of the Collocation Space in Fast Phones's collocation arrangement is not being utilized.

1.5.3 Within twenty (20) days of receipt of written notification from AT&T, Fast Phones shall either: (1) return the non-utilized Collocation Space to AT&T in which case Fast Phones shall be relieved of all obligations for charges associated with that portion of the Collocation Space applicable from the date the Collocation Space is returned to AT&T; or (2) for all states, with the exception of Florida, provide AT&T with information demonstrating that the Collocation Space will be utilized within twenty-four (24) months from the date Fast Phones accepted the Collocation Space (Acceptance Date) from AT&T. For Florida, Fast Phones shall provide information to AT&T demonstrating that the Collocation Space will be utilized within eighteen (18) months from the Acceptance Date.

1.5.4 Disputes concerning AT&T's claim of space exhaust, or near exhaust, or Fast Phones's refusal to return requested Collocation Space should be resolved by AT&T and Fast Phones pursuant to the dispute resolution language contained in the General Terms and Conditions.

1.6 Use of Space. Fast Phones may only place in the Collocation Space equipment necessary for interconnection with AT&T's services/facilities or for accessing AT&T's unbundled network elements for the provision of Telecommunications Services, as specifically set forth in this Agreement. The Collocation Space assigned to Fast Phones may not be used for any purposes other than as specifically described herein, including, but not limited to office space or a place of reporting for Fast Phones's employees or certified suppliers.

1.7 Rates and Charges. Fast Phones agrees to pay the rates and charges identified in Exhibit B.

1.8 Due Dates. If any due date contained in this Attachment falls on a weekend or a national holiday, then the due date will be the next business day thereafter. For intervals of ten (10) days or less, national holidays will be excluded. For purposes of this Attachment, national holidays include the following: New Year's Day,

Martin Luther King, Jr. Day, President's Day (Washington's Birthday), Memorial Day, Independence Day, Labor Day, Columbus Day, Veteran's Day, Thanksgiving Day and Christmas Day.

1.9 Compliance. Subject to Section 24 of the General Terms and Conditions of this Agreement, the Parties agree to comply with all applicable federal, state, county, local and administrative laws, rules, ordinances, regulations and codes in the performance of their obligations hereunder.

2 Optional Reports

2.1 Space Availability Report. Upon request from Fast Phones and at Fast Phones's expense, AT&T will provide a written report (Space Availability Report) describing in detail the space that is currently available for collocation at a particular AT&T Premises. This report will include the amount of Collocation Space available at the AT&T Premises requested, the number of collocators present at the AT&T Premises, any modifications in the use of the space since the last report on the AT&T Premises requested and the measures AT&T is taking to make additional space available for collocation arrangements. A Space Availability Report does not reserve space at the AT&T Premises for which the Space Availability Report was requested by Fast Phones.

2.1.1 The request from Fast Phones for a Space Availability Report must be in writing and include the AT&T Premises street address, as identified in the LERG, and the CLLI code for the AT&T Premises requested. CLLI code information is located in the NECA Tariff FCC No. 4.

2.1.2 AT&T will respond to a request for a Space Availability Report for a particular AT&T Premises within ten (10) days of the receipt of such request.

2.1.3 AT&T will use commercially reasonable efforts to respond in ten (10) days to a Space Availability Report request when the request includes from two (2) to five (5) AT&T Premises within the same state. The response time for Space Availability Report requests of more than five (5) AT&T Premises, whether the request is for the same state or for two (2) or more states within the AT&T Southeast Region 9-State, shall be negotiated between the Parties.

2.2 Remote Terminal Information. Upon request, AT&T will provide Fast Phones with the following information concerning AT&T's remote terminals: (i) the address of the remote terminal; (ii) the CLLI code of the remote terminal; (iii) the carrier serving area of the remote terminal; (iv) the designation of which remote terminals subtend a particular central office; and (v) the number and address of customers that are served by a particular remote terminal.

2.2.1 AT&T will provide this information within thirty (30) days of a Fast Phones request subject to the following conditions: (i) the information will only be provided on a CD in the same format in which it appears in AT&T's systems; and (ii) the information will only be provided for each serving wire center designated by Fast Phones, up to a maximum of thirty (30) wire centers per Fast Phones request per month per state. AT&T will bill the nonrecurring charge pursuant to

the rates in Exhibit B at the time AT&T sends the CD.

3 Collocation Options

3.1 Cageless Collocation. AT&T shall allow Fast Phones to collocate Fast Phones's equipment and facilities without requiring the construction of a cage or similar structure. AT&T shall allow Fast Phones to have direct access to Fast Phones's equipment and facilities in accordance with Section 5.1.2 below. AT&T shall make cageless collocation available in single bay increments. Except where Fast Phones's equipment requires special technical considerations (e.g., special cable racking or isolated ground plane), AT&T shall assign cageless Collocation Space in conventional equipment rack lineups where feasible. For equipment requiring special technical considerations, Fast Phones must provide the equipment layout, including spatial dimensions for such equipment pursuant to generic requirements contained in Telcordia GR-63-Core, and shall be responsible for compliance with all special technical requirements associated with such equipment.

3.2 Caged Collocation

3.2.1 AT&T will make caged Collocation Space in Central Offices available in fifty (50) square foot increments. At Fast Phones's option and expense, Fast Phones will arrange with a Supplier certified by AT&T (AT&T Certified Supplier) to construct a collocation arrangement enclosure in accordance with AT&T's specifications for a wire mesh enclosure prior to starting equipment installation. Where local building codes require enclosure specifications more stringent than AT&T's wire mesh enclosure specifications, Fast Phones and Fast Phones's AT&T Certified Supplier must comply with the more stringent local building code requirements. Fast Phones's AT&T Certified Supplier shall be responsible for filing and obtaining any and all necessary permits and/or licenses for such construction. AT&T or AT&T's designated agent or contractor shall provide, at Fast Phones's expense, documentation, which may include existing building architectural drawings, enclosure drawings, specifications, etc., necessary for Fast Phones's AT&T Certified Supplier to obtain all necessary permits and/or other licenses. Fast Phones's AT&T Certified Supplier shall bill Fast Phones directly for all work performed for Fast Phones. AT&T shall have no liability for, nor responsibility to pay, such charges imposed by Fast Phones's AT&T Certified Supplier. Fast Phones must provide the local AT&T Central Office Building Contact with two (2) Access Keys that will allow entry into the locked enclosure. Except in the case of an emergency, AT&T will not access Fast Phones's locked enclosure prior to notifying Fast Phones at least forty-eight (48) hours or two (2) business days, whichever is greater, before access to Fast Phones's Collocation Space is required. Upon request, AT&T shall construct the enclosure for Fast Phones.

3.2.2 In the event Fast Phones's AT&T Certified Supplier will construct the collocation arrangement enclosure, AT&T may elect to review Fast Phones's plans and specifications, prior to allowing the construction to start, to ensure compliance with AT&T's wire mesh enclosure specifications. AT&T will notify Fast Phones

of its desire to conduct this review in AT&T's Application Response, as defined herein, to Fast Phones's Initial Application. If Fast Phones's Initial Application does not indicate its desire to construct its own enclosure and Fast Phones subsequently decides to construct its own enclosure prior to AT&T's Application Response, then Fast Phones will resubmit its Initial Application, indicating its desire to construct its own enclosure. If Fast Phones subsequently decides construct its own enclosure after the bona fide firm order (hereinafter "BFFO") has been accepted by AT&T, Fast Phones will submit a Subsequent Application, as defined in Section 6.2 below. If AT&T elects to review Fast Phones's plans and specifications, then AT&T will provide notification to Fast Phones within ten (10) days after the Initial Application BFFO date or, if a Subsequent Application is submitted as set forth in the preceding sentence, then the Subsequent Application BFFO date. AT&T shall complete its review within fifteen (15) days after AT&T's receipt of Fast Phones's plans and specifications. Regardless of whether or not AT&T elects to review Fast Phones's plans and specifications, AT&T reserves the right to inspect the enclosure after construction has been completed to ensure that it is constructed according to Fast Phones's submitted plans and specifications and/or AT&T's wire mesh enclosure specifications, as applicable. If AT&T decides to inspect the constructed Collocation Space, AT&T will complete its inspection within fifteen (15) days after receipt of Fast Phones's written notification that the enclosure has been completed. Within seven (7) days after AT&T has completed its inspection of Fast Phones's caged Collocation Space, AT&T shall require Fast Phones, at Fast Phones's expense, to remove or correct any structure that does not meet Fast Phones's plans and specifications or AT&T's wire mesh enclosure specifications, as applicable.

3.3 Shared Caged Collocation

3.3.1 Fast Phones may allow other telecommunications carriers to share Fast Phones's caged Collocation Space, pursuant to the terms and conditions agreed to by Fast Phones (Host) and the other telecommunications carriers (Guests) contained in this Section, except where the AT&T Premises is located within a leased space and AT&T is prohibited by said lease from offering such an option to Fast Phones. AT&T shall be notified in writing by Fast Phones upon the execution of any agreement between the Host and its Guest(s) prior to the submission of an application. Further, such notification shall include the name of the Guest(s), the term of the agreement, and a certification by Fast Phones that said agreement imposes upon the Guest(s) the same terms and conditions for Collocation Space as set forth in this Attachment between AT&T and Fast Phones. The term of the agreement between the Host and its Guest(s) shall not exceed the term of this Agreement between AT&T and Fast Phones.

3.3.2 Fast Phones, as the Host, shall be the sole interface and responsible Party to AT&T for the assessment and billing of rates and charges contained within this Attachment and for the purposes of ensuring that the safety and security requirements of this Attachment are fully complied with by the Guest(s), its employees and agents. AT&T shall provide Fast Phones with a pro-ration of the

costs of the Collocation Space based on the number of collocators and the space used by each. There will be a minimum charge of one (1) bay/rack per Host/Guest. In addition to the above, for all states other than Florida, Fast Phones shall be the responsible Party to AT&T for the purpose of submitting applications for initial and additional equipment placement for the Guest(s). In Florida, the Guest(s) may submit its own Initial Application and Subsequent Applications for equipment placement using the Host's ACNA. A separate Guest application shall result in the assessment of an Initial Application Fee or a Subsequent Application Fee, as set forth in Exhibit B, which will be billed to the Host on the date that AT&T provides its written Application Response to the Guest(s) Bona Fide application.

3.3.3 Notwithstanding the foregoing, the Guest(s) may submit service orders directly to AT&T to request the provisioning of interconnecting facilities between AT&T and the Guest(s), the provisioning of services, and/or access to Network Elements. The bill for these interconnecting facilities, services and Network Elements will be charged to the Guest(s) pursuant to the applicable AT&T Tariff or the Guest's Interconnection Agreement with AT&T.

3.3.4 Fast Phones shall indemnify and hold harmless AT&T from any and all claims, actions, causes of action, of whatever kind or nature arising out of the presence of Fast Phones's Guest(s) in the Collocation Space, except to the extent caused by AT&T's sole negligence, gross negligence, or willful misconduct.

3.4 <u>Adjacent Collocation</u>

3.4.1 Subject to technical feasibility and space availability, AT&T will permit an adjacent collocation arrangement (Adjacent Arrangement) on AT&T Premises' property only when space within the requested AT&T Premises is legitimately exhausted and where the Adjacent Arrangement does not interfere with access to existing or planned structures or facilities on the AT&T Premises' property. An Adjacent Arrangement shall be constructed or procured by Fast Phones or Fast Phones's AT&T Certified Supplier and must be in conformance with the provisions of AT&T's design and construction specifications. Further, Fast Phones shall construct, procure, maintain and operate said Adjacent Arrangement pursuant to all of the applicable rates, terms and conditions set forth in this Attachment.

3.4.2 If Fast Phones requests Adjacent Collocation, pursuant to the conditions stated in Section 3.4 above, Fast Phones must arrange with an AT&T Certified Supplier to construct or procure the Adjacent Arrangement structure in accordance with AT&T's specifications. AT&T will provide the appropriate specifications upon request. Where local building codes require specifications more stringent than AT&T's own specifications, Fast Phones and Fast Phones's AT&T Certified Supplier shall comply with the more stringent local building code requirements. Fast Phones's AT&T Certified Supplier shall be responsible for filing and obtaining any and all necessary zoning, permits and/or licenses for such construction. Fast Phones's AT&T Certified Supplier shall bill Fast Phones

directly for all work performed for Fast Phones to comply with this Attachment. AT&T shall have no liability for, nor responsibility to pay such charges imposed by Fast Phones's AT&T Certified Supplier. Fast Phones must provide the local AT&T contact with two (2) cards, keys or other access devices used to gain entry into the locked enclosure. Except in the case of an emergency, AT&T will not access Fast Phones's locked enclosure prior to notifying Fast Phones at least forty-eight (48) hours or two (2) business days, whichever is greater, before access to the Collocation Space is required.

3.4.3 Fast Phones must submit its Adjacent Arrangement construction plans and specifications to AT&T when it places its Firm Order. AT&T shall review Fast Phones's plans and specifications prior to the construction of an Adjacent Arrangement to ensure Fast Phones's compliance with AT&T's specifications. AT&T shall complete its review within fifteen (15) days after receipt of the plans and specifications from Fast Phones for the Adjacent Arrangement. AT&T may inspect the Adjacent Arrangement during and after construction is completed to ensure that it is constructed according to Fast Phones's submitted plans and specifications. If AT&T decides to inspect the completed Adjacent Arrangement, AT&T will complete its inspection within fifteen (15) days after receipt of Fast Phones's written notification that the Adjacent Arrangement has been completed. Within seven (7) days after AT&T has completed its inspection of Fast Phones's Adjacent Arrangement, AT&T shall require Fast Phones, at Fast Phones's expense, to remove or correct any structure that does not meet its submitted plans and specifications or AT&T's specifications, as applicable.

3.4.4 Fast Phones shall provide a concrete pad, the structure housing the Adjacent Arrangement, HVAC, lighting and all of the facilities that are required to connect the structure (i.e., racking, conduits, etc.) to the AT&T point of demarcation. At Fast Phones's option and where the local authority having jurisdiction permits, AT&T shall provide an AC power source and access to physical Collocation services and facilities, subject to the same nondiscriminatory requirements as those applicable to any other physical Collocation arrangement. In Alabama and Louisiana, at Fast Phones's request and expense, AT&T will provide Direct Current (DC) power to an Adjacent Collocation site where technically feasible, as that term has been defined by the FCC, and in accordance with applicable law. AT&T will provide DC power in an Adjacent Arrangement provided that such provisioning can be done in compliance with the National Electric Code (NEC), all safety and building codes and any local codes, such as, but not limited to, local zoning codes, and upon completion of negotiations between the Parties on the applicable rates and provisioning intervals. Fast Phones will pay for any and all DC power construction and provisioning costs to an Adjacent Arrangement through individual case basis (ICB) pricing that must be paid as follows: fifty percent (50%) before the DC installation work begins and fifty percent (50%) at completion of the DC installation work to the Adjacent Arrangement. Fast Phones's AT&T Certified Supplier shall be responsible, at Fast Phones's sole expense, for filing the required documentation to obtain any and all necessary permits and/or licenses for an Adjacent Arrangement. AT&T shall allow Shared

Caged Collocation within an Adjacent Arrangement, pursuant to the terms and conditions set forth in Section 3.3 above.

3.5 Direct Connect

3.5.1 AT&T will permit Fast Phones to directly interconnect between its own physical/virtual Collocation Spaces within the same AT&T Premises (Direct Connect). Fast Phones shall contract with an AT&T Certified Supplier to place the Direct Connect, which shall be provisioned using facilities owned by Fast Phones. A Direct Connect shall utilize AT&T common cable support structure. There will be a recurring charge per linear foot, per cable, of the actual common cable support structure used by Fast Phones to provision the Direct Connect between its physical/virtual Collocation Spaces. In those instances where Fast Phones's physical/virtual Collocation Spaces are contiguous in the central office, Fast Phones will have the option of using Fast Phones's own technicians to deploy the Direct Connect using either electrical or optical facilities between its Collocation Spaces by constructing its own dedicated cable support structure. Fast Phones will deploy such electrical or optical connections directly between its own equipment without being routed through AT&T's equipment or common cable support structure. Fast Phones may not self-provision a Direct Connect on any AT&T distribution frame, Point of Termination (POT) Bay, Digital System Cross-Connect (DSX) panel or Light Guide Cross-Connect (LGX) panel. Fast Phones is solely responsible for ensuring the integrity of the signal.

3.5.2 To place an order for a Direct Connect, Fast Phones must submit an Initial Application or Subsequent Application to AT&T. If no modification to the Collocation Space is requested other than the placement of a Direct Connect, the Co-Carrier Cross Connect/Direct Connect Application Fee for Direct Connect, as defined in Exhibit B, will apply. If other modifications are requested, in addition to the placement of a Direct Connect, either an Initial Application Fee or a Subsequent Application Fee will apply, pursuant to Section 6.2 below. AT&T will bill this nonrecurring charge on the date that AT&T provides an Application Response to Fast Phones.

3.6 Co-Carrier Cross Connect (CCXC)

3.6.1 A CCXC is a cross connection between Fast Phones and another collocated telecommunications carrier, other than AT&T, in the same AT&T Premises. Where technically feasible, AT&T will permit Fast Phones to interconnect between its Collocation Space(s) and the physical/virtual collocation space(s) of another collocated telecommunications carrier(s) within the same AT&T Premises via a CCXC, pursuant to the FCC's Rules. The other collocated telecommunications carrier's agreement must also contain CCXC rates, terms and conditions before AT&T will permit the provisioning of a CCXC between the two (2) collocated carriers. The applicable AT&T charges will be assessed to Fast Phones upon Fast Phones's request for the CCXC. Fast Phones is prohibited from using the Collocation Space for the sole or primary purpose of cross-connecting to other collocated telecommunications carriers.

3.6.2 Fast Phones must contract with an AT&T Certified Supplier to place the CCXC. The CCXC shall be provisioned using facilities owned by Fast Phones. Such cross-connections to other collocated telecommunications carriers may be made using either electrical or optical facilities. Fast Phones shall be responsible for providing a LOA, with the application, to AT&T from the other collocated telecommunications carrier to which it will be cross-connecting. The CCXC shall utilize AT&T common cable support structure. There will be a recurring charge per linear foot, per cable, of the common cable support structure used by Fast Phones to provision the CCXC to the other collocated telecommunications carrier. In those instances where Fast Phones's equipment and the equipment of the other collocated telecommunications carrier are located in contiguous caged Collocation Space, Fast Phones may use its own technicians to install the CCXC using either electrical or optical facilities between the equipment of both collocated telecommunications carriers by constructing a dedicated cable support structure between the two (2) contiguous cages. Fast Phones shall deploy such electrical or optical cross-connections directly between its own equipment and the equipment of the other collocated telecommunications carrier without being routed through AT&T's equipment or, in the case of a CCXC provisioned between contiguous collocation spaces, common cable support structure. Fast Phones shall not provision CCXC on any AT&T distribution frame, POT Bay, DSX panel or LGX panel. Fast Phones is solely responsible for ensuring the integrity of the signal.

3.6.3 To place an order for a CCXC, Fast Phones must submit an application to AT&T. If no modification to the Collocation Space is requested other than the placement of a CCXC, the Co-Carrier Cross Connect/Direct Connect Application Fee for a CCXC, as defined in Exhibit B, will apply. If other modifications are requested, in addition to the placement of a CCXC, either an Initial Application or a Subsequent Application Fee will apply, pursuant to Section 6.2 below. AT&T will bill this nonrecurring charge on the date that it provides an Application Response to Fast Phones.

4 Occupancy

4.1 Space Ready Notification. AT&T will notify Fast Phones in writing when the Collocation Space is ready for occupancy (Space Ready Date).

4.2 Acceptance Walkthrough. Fast Phones will schedule and complete an acceptance walkthrough of new or additional provisioned Collocation Space with AT&T within fifteen (15) days after the Space Ready Date. AT&T will correct any identified deviations from Fast Phones's original or jointly amended application within seven (7) days after the walkthrough, unless the Parties mutually agree upon a different time frame. AT&T will then establish a new Space Ready Date. Another acceptance walkthrough will be scheduled and conducted within fifteen (15) days after the new Space Ready Date. This follow-up acceptance walkthrough will be limited to only those deviations identified in the initial walkthrough. If Fast Phones completes its acceptance walkthrough within the fifteen (15) day interval associated with the applicable Space Ready Date, billing

will begin upon the date of Fast Phones's acceptance of the Collocation Space (Space Acceptance Date). In the event Fast Phones fails to complete an acceptance walkthrough within the fifteen (15) day interval associated with the applicable Space Ready Date, the Collocation Space shall be deemed accepted by Fast Phones on the Space Ready Date and billing will commence from that date.

4.3 Early Space Acceptance. If Fast Phones decides to occupy the Collocation Space prior to the Space Ready Date, the date Fast Phones executes the Agreement for Customer Access and Acceptance to Unfinished Collocation Space is the date that will be deemed the Space Acceptance Date and billing will begin from that date.

4.4 Equipment Installation. Fast Phones shall notify AT&T in writing that its collocation equipment installation is complete. Fast Phones's collocation equipment installation is complete when Fast Phones's equipment is connected to AT&T's network for the purpose of provisioning Telecommunication Services to Fast Phones's customers. AT&T may refuse to accept any orders for cross-connects until it has received such notice from Fast Phones.

4.5 Termination of Occupancy.

4.5.1 In addition to any other provisions addressing termination of occupancy in this Agreement, Fast Phones may terminate its occupancy of a particular Collocation Space by submitting a Subsequent Application requesting termination of occupancy for such Collocation Space. Such termination shall be effective upon AT&T's acceptance of the Space Relinquishment Form. Billing for monthly recurring charges will cease on the date that Fast Phones and AT&T conduct an inspection of the terminated space and jointly sign off on the Space Relinquishment Form or on the date that Fast Phones signs off on the Space Relinquishment Form and sends this form to AT&T, provided no discrepancies are found during AT&T's subsequent inspection of the terminated space. If the subsequent inspection by AT&T reveals any discrepancies, billing will cease on the date that AT&T and Fast Phones jointly conduct an inspection, confirming that Fast Phones has corrected all of the noted discrepancies identified by AT&T. A Subsequent Application Fee will not apply for the termination of occupancy; however, specific disconnect fees may apply to the services terminating to such Collocation Space. The particular disconnect fees that would apply in each state are contained in Exhibit B.

4.5.2 Upon termination of occupancy, Fast Phones, at its sole expense, shall remove its equipment and any other property owned, leased or controlled by Fast Phones from the Collocation Space. Fast Phones shall have thirty (30) days from the Bona Fide Firm Order (BFFO) date (Termination Date) to complete such removal, including the removal of all equipment and facilities of Fast Phones's Guest(s), unless Fast Phones's Guest(s) has assumed responsibility for the Collocation Space housing the Guest(s)'s equipment and executed the appropriate documentation required by AT&T to transfer the Collocation Space to the Guest(s) prior to Fast Phones's Termination Date.

4.5.3 Fast Phones shall continue the payment of all monthly recurring charges to AT&T

until the date Fast Phones, and if applicable Fast Phones's Guest(s), has fully vacated the Collocation Space and the Space Relinquishment Form has been accepted by AT&T. If Fast Phones or Fast Phones's Guest(s) fails to vacate the Collocation Space within thirty (30) days from the Termination Date, AT&T shall have the right to remove and dispose of the equipment and any other property of Fast Phones or Fast Phones's Guest(s), in any manner that AT&T deems fit, at Fast Phones's expense and with no liability whatsoever for Fast Phones's property or Fast Phones's Guest(s) property.

4.5.4 Upon termination of Fast Phones's right to occupy specific Collocation Space, the Collocation Space will revert back to AT&T's central office space inventory. Fast Phones shall surrender the Collocation Space to AT&T in the same condition as when it was first occupied by Fast Phones, with the exception of ordinary wear and tear, unless otherwise agreed to by the Parties. Fast Phones's AT&T Certified Supplier shall be responsible for updating and making any necessary changes to AT&T's records as required by AT&T specifications including, but not limited to, AT&T's Central Office Record Drawings and ERMA Records. Fast Phones shall be responsible for the cost of removing any Fast Phones constructed enclosure, as well as any supporting structures (e.g., racking, conduits, power cables, etc.), by the Termination Date and restoring the grounds to their original condition.

5 Use of Collocation Space

5.1 Equipment Type

5.1.1 AT&T shall permit the collocation and use of any equipment necessary for interconnection to AT&T's network and/or access to AT&T's unbundled network elements in the provision of Telecommunications Services, as the term "necessary" is defined by FCC 47 C.F.R. § 51.323 (b). The primary purpose and function of any equipment collocated in an AT&T Premises must be for interconnection to AT&T's network or access to AT&T's unbundled network elements in the provision of Telecommunications Services. Equipment is necessary for interconnection if an inability to deploy that equipment would, as a practical, economical, or operational matter, preclude the requesting carrier from obtaining interconnection with AT&T at a level equal in quality to that which AT&T obtains within its own network or what AT&T provides to any affiliate, subsidiary, or other party.

5.1.2 Examples of equipment that would not be considered necessary include, but are not limited to: traditional circuit switching equipment, equipment used exclusively for call-related databases, computer servers used exclusively for providing information services, OSS equipment used to support collocated telecommunications carrier network operations, equipment that generates customer orders, manages trouble tickets or inventory, or stores customer records in centralized databases, etc. AT&T will determine upon receipt of an application if the requested equipment is necessary based on the criteria established by the FCC. Multifunctional equipment placed on an AT&T Premises must not place

any greater relative burden on AT&T's property than comparable single-function equipment. AT&T reserves the right to allow the collocation of any equipment on a nondiscriminatory basis.

5.1.3 Such equipment must, at a minimum, meet the following Telcordia Network Equipment Building Systems (NEBS) General Equipment Requirements: for Central Offices Criteria Level 1 requirements as outlined in Telcordia Special Report SR-3580, Issue 1 and for Remote Sites Criteria Level 3 requirements as outlined in the Telcordia Special report SR-3580, Issue 1. Except where otherwise required by a Commission, AT&T shall comply with the applicable FCC rules relating to denial of collocation equipment based on Fast Phones's failure to comply with this Section.

5.1.3.1 To the extent Fast Phones wishes to place equipment in its collocation that does not meet the standards set forth in 5.1.3, Fast Phones may request in writing, pursuant to the Notices section of the General Terms & Conditions, a waiver to such standards. AT&T may provide a waiver in its sole discretion.

5.1.4 At a Remote Site, all Fast Phones equipment installation shall comply with AT&T TR 73503-11h, "Grounding - Engineering Procedures". Metallic cable sheaths and metallic strength members of optical fiber cables as well as the metallic cable sheaths of all copper conductor cables shall be bonded to the designated grounding bus for the Remote Site Location. All copper conductor pairs, working and non-working, shall be equipped with a solid-state protector unit (over-voltage protection only), which has been listed by a nationally recognized testing laboratory.

5.2 Terminations. Fast Phones shall not request more DS0, DS1, DS3 and/or optical terminations for a collocation arrangement than the total port or termination capacity of the equipment physically installed in the Collocation Space. The total capacity of the equipment collocated in the Collocation Space will include equipment contained in an application, as well as any equipment already placed in the Collocation Space. If full network termination capacity of the equipment being installed is not requested in the application submitted by Fast Phones, additional network terminations for the installed equipment will require the submission of a Subsequent Application. In the event Fast Phones submits an application for terminations that will exceed the total capacity of the collocated equipment, Fast Phones will be informed of the discrepancy by AT&T and required to submit a revision to the application.

5.3 Security Interest in Equipment. Commencing with the most current calendar quarter after the Effective Date of this Agreement, and thereafter with respect to each subsequent calendar quarter during the term of this Agreement, Fast Phones will, no later than thirty (30) days after the close of such calendar quarter, provide a report to ICS Collocation Product Management, Room 34th Floor, 675 W. Peachtree Street, Atlanta, Georgia 30375, listing any equipment in the Collocation Space (i) that was added during the calendar quarter to which such report pertains, and (ii) for which there is a UCC-1 lien holder or to another entity that has a

secured financial interest in such equipment (Secured Equipment). If no Secured Equipment has been installed within a given calendar quarter, no report shall be due hereunder in connection with such calendar quarter.

5.4 No Marketing. Fast Phones shall not use the Collocation Space for marketing purposes, nor shall it place any identifying signs or markings outside the Collocation Space or on the grounds of the AT&T Premises.

5.5 Equipment Identification. Fast Phones shall place a plaque or affix other identification (e.g., stenciling or labeling) to each piece of Fast Phones's equipment, including the appropriate emergency contacts with their corresponding telephone numbers, in order for AT&T to properly identify Fast Phones's equipment in the case of an emergency. For caged Collocation Space, such identification must be placed on a plaque affixed to the outside of the caged enclosure.

5.6 Entrance Facilities.

5.6.1 Fast Phones may elect to place Fast Phones-owned or Fast Phones leased fiber entrance facilities into its Collocation Space. AT&T will designate the point of interconnection in close proximity to the AT&T Premises housing the Collocation Space, such as at an entrance manhole or a cable vault for Central Offices, which is physically accessible by both Parties. For Central Offices, Fast Phones will provide and place fiber cable in the entrance manhole of sufficient length to be pulled through conduit and into the splice location. Fast Phones will provide and install a sufficient length of fire retardant riser cable, to which AT&T will splice the entrance cable. The fire retardant riser cable will extend from the splice location to Fast Phones's equipment in Fast Phones's Collocation Space. In the event Fast Phones utilizes a non-metallic, riser-type entrance facility, a splice will not be required. For Remote Terminals Fast Phones will provide and place copper cable through conduit from the Remote Site Collocation Space to the feeder distribution interface. Such copper cable must be of sufficient length to reach the splice location for splicing by AT&T. Fast Phones must contact AT&T for authorization and instruction prior to placing any entrance facility cable in an entrance manhole or cable vault. Fast Phones is responsible for the maintenance of the entrance facilities. Nonrecurring charges for cable installation will be assessed on a per cable basis as set forth in Exhibit B upon receipt of Fast Phones's BFFO. Recurring charges for the cable support structure will be billed at the rates set forth in Exhibit B.

5.6.2 Central Office Microwave Transmission Facilities. At Fast Phones's request, AT&T will accommodate, where technically feasible and space is available, a microwave entrance facility, pursuant to separately negotiated rates, terms and conditions.

5.6.3 Central Office Copper and Coaxial Cable Entrance Facilities. In Florida and Georgia, AT&T shall permit Fast Phones to use copper or coaxial cable entrance facilities, if approved by the Commission, but only in those rare instances where Fast Phones demonstrates a necessity and entrance capacity is not at or near

exhaust in a particular AT&T Premises in which Fast Phones's Collocation Space is located. In Florida, Fast Phones must have approval by the Commission before it submits a request for copper entrance facilities. Notwithstanding the foregoing, in the case of adjacent collocation, copper facilities may be used between the adjacent collocation arrangement and the central office demarcation point, unless AT&T determines that limited space is available for the placement of these entrance facilities.

5.7 Dual Entrance Facilities at a Central Office. AT&T will provide at least two (2) interconnection points at each Central Office where at least two (2) such interconnection points are available and capacity exists. Upon receipt of a request by Fast Phones for dual entrance facilities to its physical Collocation Space, AT&T shall provide Fast Phones with information regarding AT&T's capacity to accommodate the requested dual entrance facilities. If conduit in the serving manhole(s) is available and is not reserved for another purpose or for utilization within twelve (12) months of the receipt of an application for collocation, AT&T will make the requested conduit space available for the installation of a second entrance facility to Fast Phones's Collocation Space. The location of the serving manhole(s) will be determined at the sole discretion of AT&T. Where dual entrance facilities are not available due to a lack of capacity, AT&T will provide this information to Fast Phones in the Application Response.

5.8 Shared Use

5.8.1 Fast Phones may utilize spare capacity on an existing telecommunications carrier's entrance facility for the purpose of obtaining an entrance facility to Fast Phones's Collocation Space within the same AT&T Premises.

5.8.2 AT&T shall allow the splice, as long as the fiber is non-working dark fiber. Fast Phones must arrange with AT&T in accordance with AT&T's Special Construction Procedures, RL93-11-030BT, and provide a LOA from the other telecommunications carrier authorizing AT&T to perform the splice of the Fast Phones-provided riser cable to the spare capacity on the other telecommunications carrier's entrance facility. If Fast Phones desires to allow another telecommunications carrier to use its entrance facilities, the telecommunications carrier must arrange with AT&T in accordance with AT&T's Special Construction Procedures, RL93-11-030BT, and provide a LOA from Fast Phones authorizing AT&T to perform the splice of the telecommunications carrier's provided riser cable to the spare capacity on Fast Phones's entrance facility.

5.9 Demarcation Point

5.9.1 In Tennessee, if Fast Phones elects the Tennessee Regulatory Authority (TRA) rates as set forth in Exhibit C, the additional language also set forth in Exhibit C for Demarcation Point, will be effective in conjunction with the remaining terms and conditions of this Attachment.

5.9.2 AT&T will designate the point(s) of demarcation between Fast Phones's equipment and/or network facilities and AT&T's network facilities. For 2-wire and 4-wire connections, the demarcation point shall be a common block on the

AT&T designated conventional distribution frame. Fast Phones shall be responsible for providing the common block and cabling and Fast Phones's AT&T Certified Supplier shall be responsible for installing and properly labeling/stenciling the common block and any necessary cabling identified in Section 7 below. For DS1, DS3, STS1, and optical terminations, AT&T shall designate, provide, and install demarcation point hardware on a per arrangement basis. Fast Phones shall be responsible for providing, and Fast Phones's AT&T Certified Supplier shall be responsible for installing any necessary cabling and properly labeling/stenciling the demarcation point hardware for terminations identified in Section 7 below.

5.9.3 Fast Phones or its agent must install, maintain and operate the equipment/facilities on its side of the demarcation point, pursuant to Section 5.10 below and may self-provision cross-connects that may be required within its own Collocation Space to activate service requests.

5.10 Equipment and Facilities. Fast Phones, or if required by this Attachment, Fast Phones's AT&T Certified Supplier, is solely responsible for the design, engineering, installation, testing, provisioning, performance, monitoring and maintenance/repair of the equipment and network facilities used by Fast Phones, which must be performed in compliance with all applicable AT&T specifications. Such equipment and network facilities may include, but are not limited to, cable(s), equipment, and POT connections. Fast Phones and its designated AT&T Certified Supplier must follow and comply with all AT&T specifications outlined in the following AT&T Technical Requirements: TR 73503, TR 73519, TR 73572 and TR 73564.

5.11 AT&T's Access to Collocation Space

5.11.1 From time to time, AT&T may require access to Fast Phones's Collocation Space. AT&T retains the right to access Fast Phones's Collocation Space for the purpose of making AT&T equipment and building modifications (e.g., installing, altering or removing racking, ducts, electrical wiring, HVAC, and cabling). In such cases, AT&T will give notice to Fast Phones at least forty-eight (48) hours before access to Fast Phones's Collocation Space is required. Fast Phones may elect to be present whenever AT&T performs work in the Fast Phones's Collocation Space. The Parties agree that Fast Phones will not bear any of the expense associated with this type of work.

5.11.2 In the case of an emergency, AT&T will provide oral notice of entry as soon as reasonably practicable after such entry.

5.11.3 Fast Phones must provide the local AT&T Central Office Building Contact with two (2) Access Devices that will allow AT&T entry into any enclosed and locked Collocation Space including, but not limited to, an Adjacent Arrangement, pursuant to the requirements contained in this Section.

5.12 Fast Phones's Access

5.12.1 Pursuant to Section 12 below, Fast Phones shall have access to its Collocation

Space twenty-four (24) hours a day, seven (7) days a week. Fast Phones agrees to provide the name, date of birth and either the social security number or driver's license number of each employee, supplier or agent of Fast Phones or Fast Phones's Guest(s) with Fast Phones's written request for access keys or cards (Access Devices) for specific AT&T Premises, prior to the issuance of said Access Devices, using Form RF-2906-C, the "CLEC and CLEC Certified Supplier Access Request and Acknowledgement" form. The appropriate key acknowledgement forms (the "Collocation Acknowledgement Sheet" for access cards and the "Key Acknowledgement Form" for keys) must be signed by Fast Phones and returned to AT&T Access Management within fifteen (15) days of Fast Phones's receipt of these forms. Failure to return these properly acknowledged forms will result in the subsequent access key or card requests being held by AT&T until the proper acknowledgement documents have been received by AT&T and reflect current information. Charges for Security Access System and for Security Access Devices will be billed at the rates set forth in Exhibit B. Access Devices may not be duplicated under any circumstances. Fast Phones agrees to be responsible for all Access Devices and for the return of all Access Devices in the possession of Fast Phones's employees, suppliers, agents or Guests after termination of the employment relationship, the contractual obligation with Fast Phones ends, upon the termination of this Agreement, or upon the termination of occupancy of Collocation Space in a specific AT&T Premises. Fast Phones shall pay all applicable charges associated with lost or stolen Access Devices.

5.12.2 Fast Phones must submit to AT&T the completed Access Control Request Form for all employees, suppliers, agents or Guests requiring access to an AT&T Premises at least thirty (30) days prior to the date Fast Phones desires to gain access to the Collocation Space. In order to permit reasonable access during construction of the Collocation Space, Fast Phones may submit a request for its one (1) free accompanied site visit to its designated Collocation Space at any time subsequent to AT&T's receipt of the BFFO. In the event Fast Phones desires access to its designated Collocation Space after the first accompanied free visit and Fast Phones's access request form(s) has not been approved by AT&T or Fast Phones has not yet submitted an access request form to AT&T, Fast Phones shall be permitted to access the Collocation Space accompanied by an AT&T security escort, at Fast Phones's expense, which will be assessed pursuant to the Security Escort fees contained in Exhibit B. Fast Phones must request that escorted access be provided by AT&T to Fast Phones's designated Collocation Space at least three (3) business days prior to the date such access is desired. An AT&T security escort will be required whenever Fast Phones or its approved agent or supplier requires access to the entrance manhole.

5.13 Lost or Stolen Access Devices. Fast Phones shall immediately notify AT&T in writing when any of its Access Devices have been lost or stolen. If it becomes necessary for AT&T to re-key buildings or deactivate an Access Device as a result of a lost or stolen Access Device(s) or for failure of Fast Phones's employees, suppliers, agents or Guest(s) to return an Access Device(s), Fast

Phones shall pay for the costs of re-keying the building or deactivating the Access Device(s).

5.14 Interference or Impairment

5.14.1 Notwithstanding any other provisions of this Attachment, Fast Phones shall not use any product or service provided under this Agreement, any other service related thereto or used in combination therewith, or place or use any equipment or facilities in any manner that (1) significantly degrades, interferes with or impairs service provided by AT&T or any other entity or any person's use of its telecommunications services; (2) endangers or damages the equipment, facilities or any other property of AT&T or any other entity or person; (3) compromises the privacy of any communications routed through the AT&T Premises; or (4) creates an unreasonable risk of injury or death to any individual or to the public. If AT&T reasonably determines that any equipment or facilities of Fast Phones violates the provisions of this paragraph, AT&T shall provide written notice to Fast Phones, which shall direct Fast Phones to cure the violation within forty-eight (48) hours of Fast Phones's receipt of written notice or, if such cure is not feasible, at a minimum, to commence curative measures within twenty-four (24) hours and exercise reasonable diligence to complete such measures as soon as possible thereafter. After receipt of the notice, the Parties agree to consult immediately and, if necessary, to conduct an inspection of the Collocation Space.

5.14.2 Except in the case of the deployment of an advanced service which significantly degrades the performance of other advanced services or traditional voice band services, if Fast Phones fails to cure the violation within forty-eight (48) hours or, if such cure is not possible, to commence curative action within twenty-four (24) hours and exercise reasonable diligence to complete such action as soon as possible, or if the violation is of a character that poses an immediate and substantial threat of damage to property or injury or death to any person, or any other significant degradation, interference or impairment of AT&T's or another entity's service, then and only in that event, AT&T may take such action as it deems necessary to eliminate such threat including, without limitation, the interruption of electrical power to Fast Phones's equipment and/or facilities. AT&T will endeavor, but is not required, to provide notice to Fast Phones prior to the taking of such action and AT&T shall have no liability to Fast Phones for any damages arising from such action, except to the extent that such action by AT&T constitutes willful misconduct.

5.14.3 For purposes of this Section, the term "significantly degrades" shall be defined as an action that noticeably impairs a service from a user's perspective. In the case of the deployment of an advanced service which significantly degrades the performance of other advanced services or traditional voice band services and Fast Phones fails to cure the violation within forty-eight (48) hours, or if such cure is not possible, to commence curative action within twenty-four (24) hours and exercise reasonable diligence to complete such action as soon as possible, AT&T will establish before the appropriate Commission that the technology deployed is causing the significant degradation. Any claims of network harm

presented to Fast Phones or, if subsequently necessary, the Commission must be provided by AT&T with specific and verifiable information. When AT&T demonstrates that a certain technology deployed by Fast Phones is significantly degrading the performance of other advanced services or traditional voice band services, Fast Phones shall discontinue deployment of that technology and migrate its customers to other technologies that will not significantly degrade the performance of such services. Where the only degraded service itself is a known disturber, and the newly deployed technology satisfies at least one of the criteria for a presumption that it is acceptable for deployment, pursuant to 47 C.F.R. § 51.230, the degraded service shall not prevail against the newly-deployed technology.

5.15 Personalty and Its Removal. Facilities and equipment placed by Fast Phones in the Collocation Space shall not become a part of the Collocation Space, even if nailed, screwed or otherwise fastened to the Collocation Space, but shall retain their status as personal property and may be removed by Fast Phones at any time. Any damage caused to the Collocation Space by Fast Phones's employees, suppliers, agents or Guests during the installation or removal of such property shall be promptly repaired by Fast Phones at its sole expense. If Fast Phones decides to remove equipment and/or facilities from its Collocation Space and the removal requires no physical work be performed by AT&T and Fast Phones's physical work includes, but is not limited to, power reduction, cross-connects, or tie pairs, AT&T will bill Fast Phones the Administrative Only Application Fee associated with the type of removal activity performed by Fast Phones, as set forth in Exhibit B. This nonrecurring fee will be billed on the date that AT&T provides an Application Response to Fast Phones.

5.16 Alterations. Under no condition shall Fast Phones or any person acting on behalf of Fast Phones make any rearrangement, modification, augment, improvement, addition, and/or other alteration which could affect in any way space, power, HVAC, and/or safety considerations to the Collocation Space or the AT&T Premises, hereinafter referred to individually or collectively as "Alterations", without the express written consent of AT&T, which shall not be unreasonably withheld. The cost of any such Alteration shall be paid by Fast Phones. An Alteration shall require the submission of a Subsequent Application and will result in the assessment of the applicable application fee associated with the type of alteration requested, as set forth in Sections 6.2.1 and 7.1.4 below, which will be billed by AT&T on the date that AT&T provides Fast Phones with an Application Response.

5.17 Central Office Janitorial Service. Fast Phones shall be responsible for the general upkeep of its Collocation Space. Fast Phones shall arrange directly with an AT&T Certified Supplier for janitorial services applicable to caged Collocation Space. Upon request, AT&T shall provide a list of such suppliers on an AT&T Premises-specific basis.

5.18 Upkeep of Remote Collocation Space. Fast Phones shall be responsible for the

general upkeep and cleaning of the Remote Collocation Space. Fast Phones shall be responsible for removing any of Fast Phones's debris from the Remote Collocation Space and from in and around the Remote Site Location on each visit.

6 Ordering and Preparation of Collocation Space

6.1 Initial Application. For Fast Phones's or Fast Phones's Guest's(s') initial equipment placement, Fast Phones shall input a physical Expanded Interconnection Application Document (Initial Application) for physical Collocation Space directly into AT&T's electronic application (e.App) system for processing. The Initial Application is considered Bona Fide when it is complete and accurate, meaning that all of the required fields on the Initial Application are completed with the appropriate type of information. An Initial Application Fee, as set forth in Exhibit B, will apply to each Initial Application submitted by Fast Phones for Central Office or Remote Site Collocation, as applicable, and will be billed by AT&T on the date AT&T provides Fast Phones with an Application Response.

6.1.1 For Remote Site Collocation, a request for additional space at a later date will require the submission of an Initial Application. The installation of additional shelves/equipment within an existing bay does not require an Initial Application.

6.2 Subsequent Application. In the event Fast Phones or Fast Phones's Guest(s) desires to modify its use of the Collocation Space in a Central Office after a BFFO, Fast Phones shall complete an application that contains all of the detailed information associated with a requested Alteration of the Collocation Space, as defined in Section 5.15 above (Subsequent Application). The Subsequent Application will be considered Bona Fide when it is complete and accurate, meaning that all of the required fields on the Subsequent Application have been completed with the appropriate type of information associated with the requested Alteration. AT&T shall determine what modifications, if any, to the AT&T Premises are required to accommodate the change(s) requested by Fast Phones in the Subsequent Application. Such modifications to the AT&T Premises may include, but are not limited to, floor loading changes, changes necessary to meet HVAC requirements, changes to power plant requirements, equipment additions, etc.

6.2.1 Subsequent Application Fees. The application fee paid by Fast Phones for an Alteration in a Central Office shall be dependent upon the level of assessment needed to provide a complete Application Response for the Alteration requested. Where the Subsequent Application does not require provisioning or construction work, but requires AT&T to perform an administrative activity, an Administrative Only Application Fee shall apply as set forth in Exhibit B. The Administrative Only Application Fee will apply to Subsequent Applications associated with a transfer of ownership of the Collocation Space, the addition, exchange or removal of equipment from the Collocation Space (where the removal requires no physical work to be performed by AT&T which require no additional space, power or terminations to be provided to Fast Phones's collocation arrangement), and a

virtual-to-physical conversion (in place). The Co-Carrier Cross Connect/Direct Connect Application Fee will apply when Fast Phones submits a Subsequent Application for a direct connection between its own physical and virtual Collocation Space(s) in the same AT&T Central Office or between its physical or virtual Collocation Space and that of another collocated telecommunications carrier within the same AT&T Central Office. In Florida and Tennessee, the Power Reconfiguration Only Application Fee will apply when Fast Phones submits a Subsequent Application that reflects only an upgrade or reduction in the amount of power that AT&T is currently providing to Fast Phones's physical Collocation Space in a Central Office. The fee for a Subsequent Application, for which the Alteration requested has limited effect (e.g., requires limited assessment and sufficient cable support structure, HVAC, power and terminations are available), shall be the Subsequent Application Fee, as set forth in Exhibit B. The appropriate nonrecurring application fee will be billed on the date that AT&T provides Fast Phones with an Application Response.

6.3 Space Preferences. If Fast Phones has previously requested and received a Space Availability Report for the AT&T Premises, Fast Phones may submit up to three (3) space preferences on its application by identifying the specific space identification numbers referenced on the Space Availability Report for the space it is requesting. In the event AT&T cannot accommodate Fast Phones's space preference(s), Fast Phones may accept the space allocated by AT&T or cancel its application and submit another application requesting additional space preferences for the same AT&T Premises. This application will be treated as a new application and the appropriate application fee will apply. The application fee will be billed by AT&T on the date that AT&T provides Fast Phones with an Application Response.

6.4 Space Availability Notification

6.4.1 For all states except Florida and Tennessee, AT&T will respond to an application within ten (10) days as to whether space is available or not available within the requested AT&T Premises. In Florida and Tennessee, AT&T will respond to an application within fifteen (15) days as to whether space is available or not available within an AT&T Premises. AT&T's e.App system will reflect when Fast Phones's application is Bona Fide. If the application cannot be Bona Fide, AT&T will identify what revisions are necessary for the application to become Bona Fide.

6.4.2 If the amount of space requested is not available, AT&T will notify Fast Phones of the amount of space that is available and no application fee will apply. When AT&T's response includes an amount of space less than that requested by Fast Phones or space that is configured differently, no application fee will apply. If Fast Phones decides to accept the available space, Fast Phones must resubmit its application to reflect the actual space available, including the configuration of the space, prior to submitting a BFFO. When Fast Phones resubmits its application to accept the available space, AT&T will bill Fast Phones the appropriate application fee.

6.5 Denial of Application. If AT&T notifies Fast Phones that no space is available (Denial of Application), AT&T will not assess an application fee to Fast Phones. After notifying Fast Phones that AT&T has no available space in the requested AT&T Premises, AT&T will allow Fast Phones, upon request, to tour the entire AT&T Premises within ten (10) days of such Denial of Application. In order to schedule this tour, AT&T must receive the request for the tour of the AT&T Premises within five (5) days of the Denial of Application.

6.6 Petition for Waiver. Upon Denial of Application, AT&T will timely file a petition with the appropriate Commission pursuant to 47 U.S.C. § 251(c)(6). AT&T shall provide to the Commission any information requested by that Commission. Such information shall include which space, if any, AT&T or any of AT&T's affiliates have reserved for future use and a detailed description of the specific future uses for which the space has been reserved. Subject to an appropriate nondisclosure agreement or provision, AT&T shall permit Fast Phones to inspect any floor plans or diagrams that AT&T provides to the Commission.

6.7 Waiting List

6.7.1 On a first-come, first-serve basis, which is governed by the date of receipt of an application or Letter of Intent, AT&T will maintain a waiting list of requesting telecommunications carriers that have either received a Denial of Application or, where it is publicly known that an AT&T Premises is out of space, have submitted a Letter of Intent to collocate in that AT&T Premises. AT&T will notify each telecommunications carrier on the waiting list that can be accommodated by the amount of space that becomes available, according to the position of the telecommunications carrier on said waiting list.

6.7.2 In Florida, on a first-come, first-serve basis, which is governed by the date of receipt of an application or Letter of Intent, AT&T will maintain a waiting list of requesting telecommunications carriers that have either received a Denial of Application or, where it is publicly known that an AT&T Premises is out of space, have submitted a Letter of Intent to collocate in that AT&T Premises. Sixty (60) days prior to space becoming available, if known, AT&T will notify the Commission and the telecommunications carriers on the waiting list by mail when space will become available. If AT&T does not know sixty (60) days in advance of when space will become available, AT&T will notify the Commission and the telecommunications carriers on the waiting list within two (2) business days of the determination that space will become available. A telecommunications carrier that, upon denial of physical Collocation Space, requests virtual Collocation Space shall automatically be placed on the waiting list for physical Collocation Space that may become available in the future.

6.7.3 When physical Collocation Space becomes available, Fast Phones must submit an updated, complete and accurate application to AT&T within thirty (30) days of notification by AT&T that physical Collocation Space will be available in the requested AT&T Premises previously out of space. If Fast Phones has originally

requested caged Collocation Space and cageless Collocation Space becomes available, Fast Phones may refuse such space and notify AT&T in writing, within the thirty (30) day timeframe referenced above, that Fast Phones wishes to maintain its place on the waiting list for caged physical Collocation Space, without accepting the available cageless Collocation Space.

6.7.4 Fast Phones may accept an amount of space less than what it originally requested by submitting an application as set forth above, and upon request, may maintain its position on the waiting list for the remaining space that was initially requested. If Fast Phones does not submit an application or notify AT&T in writing within the thirty (30) day timeframe as described in Section 6.7.2 above, AT&T will offer the available space to the next telecommunications carrier on the waiting list and remove Fast Phones from the waiting list. Upon request, AT&T will advise Fast Phones as to its position on the waiting list for a particular AT&T Premises.

6.8 Public Notification. AT&T will maintain on its Interconnection Web site, a notification document that will indicate all AT&T Premises that are without available space. AT&T shall update such document within ten (10) days of the date that AT&T becomes aware that insufficient space is available to accommodate physical Collocation. AT&T will also post a document on its Interconnection Web site that contains a general notice when space becomes available in an AT&T Premises previously on the space exhaust list.

6.9 Application Response

6.9.1 In Alabama, Georgia, Kentucky, Louisiana, Mississippi, North Carolina and South Carolina, when space has been determined to be available for physical (caged or cageless) Collocation arrangements, AT&T will provide an Application Response within twenty (20) days of receipt of a Bona Fide application. The Application Response will be a written response that includes sufficient information to enable Fast Phones to place a Firm Order, which, at a minimum, will include the configuration of the space, the Cable Installation Fee, the Cable Records Fee, and any other applicable space preparation fees, as described in Section 8 below.

6.9.2 In Florida and Tennessee, within fifteen (15) days of receipt of a Bona Fide application, when space has been determined to be available or when a lesser amount of space than that requested is available, then with respect to the space available, AT&T will provide an Application Response including sufficient information to enable Fast Phones to place a Firm Order. The Application Response will include, at a minimum, the configuration of the space, the Cable Installation Fee, the Cable Records Fee and any other applicable space preparation fees, as described in Section 8 below. When Fast Phones submits ten (10) or more applications within ten (10) days, the initial fifteen (15) day response interval will increase by ten (10) days for every additional ten (10) applications or fraction thereof.

6.10 Application Modifications. If a modification or revision is made to any information in the Bona Fide application after AT&T has provided the

Application Response and prior to a BFFO, with the exception of modifications to (1) Customer Information, (2) Contact Information or (3) Billing Contact Information, whether at the request of Fast Phones or as necessitated by technical considerations, the application shall be considered a new application and handled as a new application with respect to the response and provisioning intervals. AT&T will charge Fast Phones the appropriate application fee associated with the level of assessment performed by AT&T, pursuant to Sections 6.1 and 6.2 above.

6.11 Bona Fide Firm Order

6.11.1 Fast Phones shall indicate its intent to proceed with a Collocation Space request in an AT&T Premises by submitting a BFFO to AT&T. The BFFO must be received by AT&T no later than thirty (30) days after AT&T's Application Response to Fast Phones's Bona Fide application or Fast Phones's application will expire.

6.11.2 AT&T will establish a Firm Order date based upon the date AT&T is in receipt of Fast Phones's BFFO. AT&T will acknowledge the receipt of Fast Phones's BFFO within seven (7) days of receipt, so that Fast Phones will have positive confirmation that its BFFO has been received. AT&T's response to a BFFO will include a Firm Order Confirmation, which contains the firm order date. No revisions may be made to a BFFO.

7 Construction and Provisioning

7.1 Construction and Provisioning Intervals

7.1.1 In Florida and Tennessee, AT&T will complete construction of physical Collocation Space as soon as possible within a maximum of ninety (90) days from receipt of a BFFO or as agreed to by the Parties. For virtual Collocation Space, AT&T will complete construction as soon as possible within a maximum of sixty (60) days from receipt of a BFFO or as agreed to by the Parties. For Alterations requested to Collocation Space after the initial space has been completed, AT&T will complete construction for Collocation Space as soon as possible within a maximum of forty-five (45) days from receipt of a BFFO or as agreed to by the Parties, as long as no additional space has been requested by Fast Phones. If additional space has been requested by Fast Phones, AT&T will complete construction for the requested Collocation Space as soon as possible within a maximum of ninety (90) days from receipt of a BFFO for physical Collocation Space and forty five (45) days from receipt of a BFFO for virtual Collocation Space. If AT&T does not believe that construction will be completed within the relevant provisioning interval and AT&T and Fast Phones cannot agree upon a completion date, within forty-five (45) days of receipt of the BFFO for an initial request, or within thirty (30) days of receipt of the BFFO for an Alteration, AT&T may seek an extension from the Commission.

7.1.2 In Alabama, Georgia, Kentucky, Louisiana, Mississippi, North Carolina and South Carolina, AT&T will complete construction for caged physical Collocation Space under ordinary conditions as soon as possible within a maximum of ninety

(90) days from receipt of a BFFO or as agreed to by the Parties. AT&T will complete construction for cageless physical Collocation Space under ordinary conditions as soon as possible within a maximum of sixty (60) days from receipt of a BFFO and ninety (90) days from receipt of a BFFO for extraordinary conditions, or as agreed to by the Parties. Ordinary conditions are defined as space available with only minor changes required to AT&T's support systems. (Examples include, but are not limited to: minor modifications to HVAC, cabling and AT&T's power plant.) Extraordinary conditions include, but may not be limited to: major AT&T equipment rearrangements or additions; power plant additions or upgrades; major mechanical additions or upgrades; major upgrades for ADA compliance; environmental hazards or hazardous materials abatement; and arrangements for which equipment shipping intervals are extraordinary in length. The Parties may mutually agree to renegotiate an alternative provisioning interval for the Collocation Space requested or AT&T may seek a waiver from the ordered interval, as set forth above, from the appropriate Commission, if AT&T does not believe that construction will be completed within the relevant provisioning interval.

7.1.3 Records Only Change. When Fast Phones adds equipment, that was originally included on Fast Phones's Initial Application or a Subsequent Application, and the installation of this equipment requires no additional space preparation work or cable terminations on the part of AT&T, then AT&T will impose no additional charges or intervals.

7.1.4 For Central Offices in the states of Alabama, Georgia, Kentucky, Louisiana, Mississippi, North Carolina, and South Carolina, AT&T will provide the reduced intervals outlined below to Fast Phones, when Fast Phones requests an Alteration specifically identified in Sections 7.1.4.1 through 7.1.4.9 below as an "Augment". Except as otherwise set forth in Section 7.1.4.10 below, such Augment will require a Subsequent Application and will result in the assessment of the appropriate application fee associated with the type of Augment requested by Fast Phones. AT&T will assess the appropriate nonrecurring application fee set forth in Exhibit B on the date that it provides an Application Response to Fast Phones.

7.1.4.1 Simple Augments will be completed within twenty (20) days after receipt of the BFFO for an:

- Extension of Existing AC Circuit Capacity within Arrangement where Sufficient Circuit Capacity is Available
- Fuse Change and/or Increase or Decrease -48 Volt (-48V) DC Power

7.1.4.2 Minor Augments will be completed within forty-five (45) days after receipt of the BFFO for:

- 168 DS1 Terminations at the AT&T Demarcation Frame (Databasing Only; Panels, Relay Racks and Overhead Racking Exist)
- 96 DS3 Terminations at the AT&T Demarcation Frame (Databasing Only; Panels, Relay Racks and Overhead Racking Exist)

- 99 Fiber terminations at the AT&T Demarcation Frame (Databasing Only; Panels, Relay Racks and Overhead Racking Exist)
- Maximum of 2000 Service Ready DS0 Terminations at the AT&T Demarcation Frame (Databasing Only; Panels, Relay Racks and Overhead Racking Exist)

7.1.4.3 Intermediate Augments will be completed within sixty (60) days after receipt of the BFFO for:

- 168 DS1s (Databasing and Installation of Termination Panels, Relay Racks or Additional Structure, as Required)
- 96 DS3s (Databasing and Installation of Termination Panels, Relay Racks or Additional Structure, as Required)
- 99 Fiber Terminations (Databasing and Installation of Termination Panels, Relay Racks or Additional Structure, as Required)
- 2000 DS0s (Databasing and Installation of Termination Panels, Relay Racks or Additional Structure, as Required)
- Installation of Cable Racking or Other Support Structure, as Required, to Support CCXCs (Adequate Floor or Ceiling Structural Capacity Exists and Support/Protection structure for Fiber Patch Cord is Excluded)

7.1.4.4 Major Augments of physical Collocation Space will be completed within ninety (90) days after BFFO. All requests for additional Physical Collocation Space (caged or cageless) are included in this category.

7.1.4.5 Major Augments of virtual Collocation Space will be completed within seventy-five (75) days after BFFO. This category includes all requests for additional virtual Collocation Space.

7.1.4.6 If Fast Phones submits an Augment that includes two (2) Augment items from the same category in either Sections 7.1.4.1, 7.1.4.2 or 7.1.4.3 above, the provisioning interval associated with the next highest Augment category will apply (e.g., if two (2) items from the Minor Augment category are requested on the same request, then an interval of sixty (60) days from the receipt of the BFFO would apply, which is the interval associated with the Intermediate Augment category).

7.1.4.7 If Fast Phones submits an Augment that includes three (3) Augment items from the same category in either Sections 7.1.4.1, 7.1.4.2, or 7.1.4.3 above, the Major Augment interval of ninety (90) days from the receipt of the BFFO would apply (e.g., if three (3) items from the Simple Augment category are requested on the same request for a physical Collocation arrangement, then an interval of ninety (90) days from the receipt of the BFFO would apply, which is the Major physical Augment interval; likewise if three (3) items from the Simple Augment category are requested on the same request for a virtual Collocation arrangement, then an interval of seventy-five (75) days from the receipt of the BFFO would apply, which is the Major virtual Augment interval).

7.1.4.8 If Fast Phones submits an Augment that includes one (1) Augment item from two (2) separate categories in Sections 7.1.4.1, 7.1.4.2 and 7.1.4.3 above, the Augment interval associated with the highest Augment category will apply (e.g., if an item from the Minor Augment category and an item from the Intermediate Augment category are requested on the same request, then an interval of sixty (60) days from the receipt of the BFFO would apply, which is the interval associated with the Intermediate Augment category).

7.1.4.9 All Augments not expressly included in the Simple, Minor, Intermediate or Major Augment categories, as outlined above, will be placed into the appropriate category as negotiated by Fast Phones and AT&T. If Fast Phones and AT&T are unable to determine the appropriate category through negotiation, then the appropriate Major Augment category, identified in Sections 7.1.4.4 and Section 7.1.4.5 above, would apply based on whether the Augment is for Fast Phones's physical or virtual Collocation Space.

7.1.4.10 Individual application fees associated with Simple, Minor and Intermediate Augments are contained in Exhibit B. If Fast Phones requests multiple items from different Augment categories, AT&T will bill Fast Phones the Augment application fee, as identified in Exhibit B, associated with the higher Augment category only. The appropriate application fee will be assessed to Fast Phones at the time AT&T provides Fast Phones with the Application Response. Fast Phones will be assessed a Subsequent Application Fee for all Major Augments (Major Augments are defined above in Sections 7.1.4.4 and 7.1.4.5 above for physical and virtual Collocation Space, respectively). The Subsequent Application Fee is also reflected in Exhibit B.

7.2 Joint Planning. Unless otherwise agreed to by the Parties, a joint planning meeting or other method of joint planning between AT&T and Fast Phones will commence within a maximum of twenty (20) days from AT&T's receipt of a BFFO. At such meeting, the Parties will agree to the preliminary design of the Collocation Space and the equipment configuration requirements, as reflected in the application and affirmed in the BFFO.

7.3 Permits. Each Party, its agent(s) or AT&T Certified Supplier(s) will diligently pursue filing for the permits required for the scope of work to be performed by that Party, its agent(s) or AT&T Certified Supplier(s) within ten (10) days of the completion of the finalized construction design and specifications.

7.4 Central Office Circuit Facility Assignments

7.4.1 Unless otherwise specified, AT&T will provide Circuit Facility Assignments (CFAs) to Fast Phones prior to the applicable provisioning interval set forth herein (Provisioning Interval) for those AT&T Premises in which Fast Phones has physical Collocation Space with no POT bay or with a grandfathered POT bay provided by AT&T. AT&T cannot provide CFAs to Fast Phones prior to the Provisioning Interval for those AT&T Premises in which Fast Phones has physical Collocation Space with a POT bay provided by Fast Phones or virtual

Collocation Space, until Fast Phones has provided AT&T with the following information:

7.4.1.1 For physical Central Office Collocation Space with a Fast Phones-provided POT bay, Fast Phones shall provide AT&T with a complete layout of the POT panels on an Equipment Inventory Update (EIU) form that shows the locations, speeds, etc.; or

7.4.1.2 For virtual Central Office Collocation Space, Fast Phones shall provide AT&T with a complete layout of Fast Phones's equipment on an EIU form, that includes the locations of the low speed ports and the specific frame terminations to which the equipment will be wired by Fast Phones's AT&T Certified Supplier.

7.4.2 AT&T cannot begin work on the CFAs until the complete and accurate EIU form has been received from Fast Phones. If the EIU form is provided within ten (10) days prior to the ending date of the Provisioning Interval, then the CFAs will be made available by the ending date of the Provisioning Interval. If the EIU form is not received ten (10) days prior to the ending date of the Provisioning Interval, then the CFAs will be provided within ten (10) days of AT&T's receipt of the EIU form.

7.4.3 AT&T will bill Fast Phones a nonrecurring charge, as set forth in Exhibit B, each time Fast Phones requests a resend of its original CFA information for any reason other than an AT&T error in the CFAs initially provided to Fast Phones.

7.5 Use of AT&T Certified Supplier. Fast Phones shall select a supplier which has been approved as an AT&T Certified Supplier to perform all engineering and installation work. Fast Phones, if an AT&T Certified Supplier or Fast Phones's AT&T Certified Supplier must follow and comply with all of AT&T's specifications and the following AT&T Technical Requirements: TR 73503, TR 73519, TR 73572 and TR 73564. Unless the AT&T Certified Supplier has met the requirements for all of the required work activities, Fast Phones must use a different AT&T Certified Supplier for the work activities associated with transmission equipment, switching equipment and power equipment. AT&T shall provide Fast Phones with a list of AT&T Certified Suppliers, upon request. Fast Phones, if an AT&T Certified Supplier, or Fast Phones's AT&T Certified Supplier(s) shall be responsible for installing Fast Phones's equipment and associated components, extending power cabling to the AT&T power distribution frame, performing operational tests after installation is complete, and notifying AT&T's equipment engineers and Fast Phones upon successful completion of the installation and any associated work. When an AT&T Certified Supplier is used by Fast Phones, the AT&T Certified Supplier shall bill Fast Phones directly for all work performed for Fast Phones pursuant to this Attachment. AT&T shall have no liability for nor responsibility to pay, such charges imposed by Fast Phones's AT&T Certified Supplier. AT&T shall make available its supplier certification program to Fast Phones or any supplier proposed by Fast Phones and will not unreasonably withhold certification. All work performed by or for Fast Phones shall conform to generally accepted industry standards.

7.6 Alarms and Monitoring. AT&T shall place environmental alarms in the AT&T Premises for the protection of AT&T equipment and facilities. Fast Phones shall be responsible for the placement, monitoring and removal of environmental and equipment alarms used to service Fast Phones's Collocation Space. Upon request, AT&T will provide Fast Phones with an applicable AT&T tariffed service(s) to facilitate remote monitoring of collocated equipment by Fast Phones. Both Parties shall use best efforts to notify the other of any verified environmental condition (e.g., temperature extremes or excess humidity) known to that Party.

7.7 Virtual to Physical Relocation. In the event physical Collocation Space was previously denied at an AT&T Central Office due to technical reasons or space limitations and physical Collocation Space has subsequently become available, Fast Phones may relocate its existing virtual Collocation arrangement(s) to a physical Collocation arrangement(s) and pay the appropriate fees associated with the rearrangement or reconfiguration of the services being terminated into the virtual Collocation arrangement, as set forth in Exhibit B. If AT&T knows when additional physical Collocation Space may become available at the AT&T Central Office requested by Fast Phones, such information will be provided to Fast Phones in AT&T's written denial of physical Collocation Space. Fast Phones must arrange with an AT&T Certified Supplier for the relocation of equipment from a virtual Collocation Space to a physical Collocation Space and will bear the cost of such relocation, including the costs associated with moving the services from the virtual Collocation Space to the new physical Collocation Space.

7.7.1 In Alabama, AT&T will complete a relocation of a virtual collocation arrangement to a cageless physical collocation arrangement within sixty (60) days from AT&T's receipt of a BFFO and from a virtual collocation arrangement to a caged physical collocation arrangement within ninety (90) days from AT&T's receipt of a BFFO.

7.8 Virtual to Physical Conversion (In-Place)

7.8.1 Virtual collocation arrangements in Central Offices may be converted to "in-place" physical caged collocation arrangements if the potential conversion meets all of the following criteria: (1) there is no change in the amount of equipment or the configuration of the equipment that was in the virtual Collocation Space; (2) the conversion of the virtual collocation arrangement will not cause the equipment or the results of that conversion to be located in a space that AT&T has reserved for its own future needs; and (3) any changes to the arrangement can be accommodated by existing power, HVAC, and other requirements. Unless otherwise specified herein, AT&T will complete virtual to physical Collocation Space conversions (in-place) within sixty (60) days from receipt of the BFFO. AT&T will bill Fast Phones an Administrative Only Application Fee, as set forth in Exhibit B, on the date AT&T provides an Application Response to Fast Phones.

7.8.2 In Alabama and Tennessee, AT&T will complete virtual to physical conversions (in place) within thirty (30) days from receipt of the BFFO as long as the

conversion meets all of the criteria specified in Section 7.8.1 above.

7.9 Cancellation. Unless otherwise specified in this Attachment, if at any time prior to Space Acceptance, Fast Phones cancels its order for Collocation Space (Cancellation), AT&T will bill the applicable nonrecurring charge(s) for any and all work processes for which work has begun or been completed. In Florida, if Fast Phones cancels its order for Collocation Space at any time prior to the Space Ready Date, no cancellation fee shall be assessed by AT&T; however, Fast Phones will be responsible for reimbursing AT&T for any costs specifically incurred by AT&T on behalf of Fast Phones up to the date that the written notice of cancellation was received by AT&T. In Georgia, if Fast Phones cancels its order for Collocation Space at any time prior to space acceptance, AT&T will bill Fast Phones for all costs incurred prior to the date of Cancellation and for any costs incurred as a direct result of the Cancellation, not to exceed the total amount that would have been due had the Firm Order not been canceled.

7.10 Licenses. Fast Phones, at its own expense, will be solely responsible for obtaining from governmental authorities, and any other appropriate agency, entity, or person, all rights, privileges, permits, licenses and certificates necessary or required to operate as a provider of telecommunications services to the public or to build-out, equip and/or occupy Collocation Space in an AT&T Premises.

7.11 Environmental Compliance. The Parties agree to utilize and adhere to the Environmental Hazard Guidelines identified in Exhibit A attached hereto.

8 Rates and Charges

8.1 Rates. Fast Phones agrees to pay the rates and charges identified in Exhibit B attached hereto.

8.1.1 In Tennessee, if Fast Phones elects the TRA rates as set forth in Exhibit C, the additional language also set forth in Exhibit C for Application Fee, Space Preparation, Floor Space and Caged Collocation Power Usage metering, will be effective in conjunction with the remaining terms and conditions of this Attachment.

8.1.2 Should Fast Phones elect to transition to the TRA Option after the execution of this Agreement, Fast Phones shall notify AT&T in writing sixty (60) days prior to the implementation of this election.

8.2 Application Fees. AT&T shall assess any nonrecurring application fees within thirty (30) days of the date that AT&T provides an Application Response to Fast Phones or on Fast Phones's next scheduled monthly billing statement.

8.3 Recurring Charges

8.3.1 If Fast Phones has met the applicable fifteen (15) day acceptance walk through interval specified in Section 4.2 above, billing for recurring charges will begin upon the Space Acceptance Date. In the event Fast Phones fails to complete an acceptance walk through within the applicable fifteen (15) day interval, billing for recurring charges will commence on the Space Ready Date. If Fast Phones

occupies the space prior to the Space Ready Date, the date Fast Phones occupies the space is deemed the Space Acceptance Date and billing for recurring charges will begin on that date. The billing for all applicable monthly recurring charges will begin in Fast Phones's next billing cycle and will include any prorated charges for the period from Fast Phones's Space Acceptance Date or Space Ready Date, whichever is appropriate pursuant to Section 4.2 above, to the date the bill is issued by AT&T.

8.3.2 Unless otherwise stated in Section 8.6 below, monthly recurring charges for -48V DC power will be assessed per fused ampere (amp), per month, based upon the total number of fused amps of power capacity requested by Fast Phones on Fast Phones's Initial Collocation Application and all Subsequent Collocation Applications, which may either increase or decrease the originally requested, and any subsequently augmented, number of fused amps of power capacity requested, consistent with Commission orders.

8.3.3 AT&T shall have the right to inspect and inventory any DC power fuse installations at an AT&T BDFB or DC power circuit installations at AT&T's main power board for any Fast Phones collocation arrangement, to verify that the total number of fused amps of power capacity installed by Fast Phones's AT&T Certified Supplier matches the number of fused amps of DC power capacity requested by Fast Phones on Fast Phones's Initial Application and all Subsequent Applications. If AT&T determines that Fast Phones's AT&T Certified Supplier has installed more DC capacity than Fast Phones requested on its Initial Application and all Subsequent Applications, AT&T shall notify Fast Phones in writing of such discrepancy and shall assess Fast Phones for the additional DC power fuse/circuit capacity from the Space Acceptance Date or Space Ready Date, whichever is applicable pursuant to Section 8.3.1 above, for the most recent Initial Application or Subsequent Application, submitted for such collocation arrangement. AT&T shall also revise Fast Phones's recurring DC power charges, on a going-forward basis, to reflect the higher number of fused amps of power capacity available for the collocation arrangement.

8.4 Nonrecurring Charges. Unless specified otherwise herein, AT&T shall assess nonrecurring charges, including all application fees, within thirty (30) days of the date that AT&T provides an Application Response to Fast Phones or on Fast Phones's next scheduled monthly billing statement, if Fast Phones's current month's billing cycle has already closed. Nonrecurring charges associated with the processing of the Firm Order for collocation space preparation (Firm Order Processing Fee) shall be billed by AT&T within thirty (30) days of AT&T's confirmation of Fast Phones's BFFO or on Fast Phones's next scheduled monthly billing statement.

8.5 In some cases, Commissions have ordered AT&T to separate its disconnect costs and its installation costs into two separate nonrecurring charges. Accordingly, unless otherwise noted in this Agreement, the Commission ordered disconnect charges will be applied at the time the disconnect activity is performed by AT&T, regardless of whether or not a disconnect order is issued by Fast Phones.

Disconnect charges are set forth in Exhibit B of this Attachment.

8.6 Central Office Space Preparation. Space preparation fees consist of a nonrecurring charge for Firm Order Processing and monthly recurring charges for Central Office Modifications and Common Systems Modifications. For all states except Florida, Fast Phones shall remit the payment of the nonrecurring Firm Order Processing Fee coincident with the submission of Fast Phones's BFFO. In Florida, the nonrecurring Firm Order Processing Fee will be billed by AT&T, pursuant to Section 8.4 above. The monthly recurring charge for Central Office Modifications will be assessed per arrangement, per square foot, for both caged and cageless physical Collocation Space. The monthly recurring charge for Common Systems Modifications will be assessed per arrangement, per square foot for cageless physical Collocation Space and on a per cage basis for caged physical Collocation Space. These charges recover the costs associated with preparing the Collocation Space, which includes, but is not limited to, the following items: a survey, engineering of the Collocation Space, and design and modification costs for network, building and support systems.

8.7 Central Office Floor Space. The Floor Space Charge includes reasonable charges for lighting, HVAC, and other allocated expenses associated with maintenance of the AT&T Premises; however, this charge does not include any expenses associated with AC or DC power supplied to Fast Phones's Collocation Space for the operation of Fast Phones's equipment. For caged physical Collocation Space, Fast Phones shall pay floor space charges based upon the number of square feet enclosed. The minimum size for caged Collocation Space is fifty (50) square feet. Additional caged Collocation Space may be requested in increments of fifty (50) square feet. For cageless Collocation Space, Fast Phones shall pay floor space charges based upon the following floor space calculation: [(depth of the equipment lineup in which the rack is placed) + (0.5 x maintenance aisle depth) + (0.5 x wiring aisle depth)] x (width of rack and spacers). For purposes of this calculation, the depth of the equipment lineup shall consider the footprint of equipment racks plus any equipment overhang. AT&T will assign cageless Collocation Space in conventional equipment rack lineups where feasible. In the event Fast Phones's collocated equipment requires special cable racking, an isolated ground plane, or any other considerations and treatment which prevents placement within conventional equipment rack lineups, Fast Phones shall be required to request an amount of floor space sufficient to accommodate the total equipment arrangement.

8.8 Remote Site Bay Space. In a Remote Site, the bay space charge recovers the costs associated with air conditioning, ventilation and other allocated expenses for the maintenance of the Remote Site Location, and includes the amperage necessary to power Fast Phones's equipment. Fast Phones shall remit bay space charges based upon the number of bays requested. AT&T will assign Remote Site Collocation Space in conventional Remote Site bay lineups where feasible.

8.9 Power

8.9.1 In a Central Office AT&T shall make available -48V DC power for Fast Phones's Collocation Space at an AT&T BDFB. When obtaining DC power from an AT&T BDFB, Fast Phones's fuses and power cables (for the A & B feeds) must be engineered (sized), and installed by Fast Phones's AT&T Certified Supplier, in accordance with the number of fused amps of DC power requested by Fast Phones on Fast Phones's Initial Application and any Subsequent Applications. Fast Phones is also responsible for contracting with an AT&T Certified Supplier to run the power distribution feeder cable from the AT&T BDFB to the equipment in Fast Phones's Collocation Space. The AT&T Certified Supplier contracted by Fast Phones must provide AT&T with a copy of the engineering power specifications prior to the day on which Fast Phones's equipment becomes operational (hereinafter "Commencement Date"). AT&T will provide the common power feeder cable support structure between the AT&T BDFB and Fast Phones's Collocation Space. Fast Phones shall contract with an AT&T Certified Supplier who shall be responsible for performing those power provisioning activities required to enable Fast Phones's equipment to become operational, which may include, but are not limited to, the installation, removal or replacement of the following: dedicated power cable support structure within Fast Phones's Collocation Space, power cable feeds and terminations of the power cabling. Fast Phones and Fast Phones's AT&T Certified Supplier shall comply with all applicable NEC, AT&T TR 73503, Telcordia and ANSI Standards that address power cabling, installation and maintenance.

8.9.1.1 At a Remote Site, AT&T shall make available -48V DC power for Fast Phones's Remote Collocation Space at a BDFB within the Remote Site Location. The charge for power shall be assessed as part of the recurring charge for bay space, as referenced in Section 8.7 above. If the power requirements for Fast Phones's equipment exceed the capacity available, then such additional power requirements shall be assessed on an individual case basis.

8.9.2 In Florida Central Offices only, subject to technical feasibility, commercial availability and safety limitations, AT&T will permit Fast Phones to request DC power in five (5) amp increments from five (5) amps up to one hundred (100) amps from the AT&T BDFB. However, in accordance with industry standard fuse sizing, Fast Phones may request that AT&T provision DC power of seventy (70) amps or greater directly from AT&T's main power board. The industry standard fuse size (which is a circuit breaker on the main power board) available at an AT&T main power board in all AT&T Premises is a two hundred twenty-five (225) amp circuit breaker.

8.9.3 AT&T will revise Fast Phones's Central Office recurring power charges, in accordance with Section 8.3 above, to reflect a power upgrade when Fast Phones submits a Subsequent Application requesting an increase in the number of fused amps it is currently receiving from AT&T for its Collocation Space. If Fast Phones's existing fuses and power cables (for the A&B power feed) are not sufficient to support the additional number of fused amps requested, Fast

Phones's AT&T Certified Supplier shall perform whatever activities are necessary, which may include the installation of new/additional fuses or power cables, to comply with the appropriate NEC, AT&T TR 73503, Telcordia and ANSI Standards, as well as the requirements noted in Sections 8.7 and 8.7.1 above. Fast Phones's AT&T Certified Supplier shall provide notification to AT&T when these activities have been completed.

8.9.4 AT&T will revise Fast Phones's Central Office recurring power charges, in accordance with Section 8.3 above, to reflect a power reduction upon AT&T's receipt of the Power Reduction Form from Fast Phones, certifying the completion of the power reduction work, including the removal of any associated power cabling by Fast Phones's AT&T Certified Supplier. Notwithstanding the foregoing, if Fast Phones's AT&T Certified Supplier has not removed or, at AT&T's discretion, cut the power cabling within thirty (30) days, the power reduction will not become effective until the cabling is removed or, at AT&T's discretion, cut by Fast Phones's AT&T Certified Supplier and Fast Phones shall pay for the amount of power that had been requested prior to the power reduction request for the period up to the date the power cabling is actually removed.

8.9.5 If Fast Phones requests an increase or a reduction in the amount of power that AT&T is currently providing in a Central Office, Fast Phones must submit a Subsequent Application. In all states other than Florida and Tennessee if no modification to the Collocation Space is requested other than the increase or reduction in power, the Simple Augment fee will apply. In Florida and Tennessee the Power Reconfiguration Only Application Fee as set forth in Exhibit B will apply. If modifications are requested in addition to the increase or reduction of power, the Subsequent Application Fee will apply. AT&T will bill this nonrecurring fee on the date that AT&T provides an Application Response to Fast Phones's Subsequent Application.

8.9.5.1 In Central Offices in Alabama and Louisiana, if Fast Phones has existing power configurations currently served from the AT&T main power board and requests that its power be reconfigured to connect to an AT&T BDFB, in a specific AT&T Premises, Fast Phones must submit a Subsequent Application to AT&T. AT&T will provide a response to such application within seven (7) days and no Simple Augment Application Fee will be assessed by AT&T for this one time only power reconfiguration to an AT&T BDFB. For any power reconfigurations thereafter, Fast Phones will submit a Subsequent Application and the appropriate Simple Augment Application Fee will apply.

8.9.6 If Fast Phones elects to install its own DC Power Plant, AT&T shall provide AC power to feed Fast Phones's DC Power Plant. Charges for AC power will be assessed on a per breaker ampere, per month basis, pursuant to the rates specified in Exhibit B. The AC power rates include recovery for the provision of commercial and standby AC power. When obtaining power from an AT&T service panel, protection devices and power cables must be engineered (sized) and installed by Fast Phones's AT&T Certified Supplier, with the exception that AT&T shall engineer and install protection devices and power cables for Adjacent

Collocation. Fast Phones's AT&T Certified Supplier must provide a copy of the engineering power specifications prior to the Commencement Date. AC power voltage and phase ratings shall be determined on a per location basis. At Fast Phones's option, Fast Phones may arrange for AC power in an adjacent collocation arrangement from a retail provider of electrical power.

8.9.7 Fast Phones shall contract with an AT&T Certified Supplier to perform the installation and removal of dedicated power cable support structure within Fast Phones's arrangement and terminations of cable within the Collocation Space.

8.9.8 Fused Amp Power. In all states, except as otherwise set forth in this Agreement, AT&T shall make available -48V DC power on a per fused amp, per month basis, pursuant to the following:

For power provisioned from a BDFB. The number of fused amps requested by Fast Phones on its collocation application for power that is being provisioned from an AT&T BDFB will be multiplied by the DC power fused amp rate set forth in Exhibit B. A minimum of ten (10) fused amps is required.

For existing power configurations that are provisioned from AT&T's main power board. The number of fused amps made available at the main power board, in increments of two hundred and twenty-five (225) amps/main power board circuit, will be multiplied by the DC power fused amp rate set forth in Exhibit B.

8.9.9 Florida Power Usage Option

8.9.9.1 In Central Offices in Florida only, Fast Phones may request that -48 DC power provisioned by AT&T to Fast Phones's Collocation Space be assessed per amp, per month based upon amps used, pursuant to the rates set forth in Exhibit B. Monthly recurring power charges will be assessed on the Space Acceptance Date or Space Ready Date, whichever is appropriate, pursuant to Section 8.3 above. If Fast Phones desires to convert existing physical collocation arrangements to the Florida Power Usage Option (hereinafter "FL Option"), then the monthly recurring power charges that are applicable to the FL Option, contained in Exhibit B, will be assessed on the Space Ready Date associated with the Subsequent Application submitted by Fast Phones to convert an existing collocation arrangement to the FL Option. The monthly recurring charges for DC power, under the FL Option, shall be calculated and applied based on the amount of power Fast Phones requests that it be allowed to draw at a given time to a specific physical collocation arrangement in a particular AT&T Premises on Fast Phones's Initial Application or Subsequent Application. AT&T shall allow Fast Phones at Fast Phones's option, to order a power feed that is capable of delivering a higher DC power level but to fuse this power feed so as to allow a power level less than the feed's maximum to be drawn by Fast Phones. AT&T is not required to build its central office power infrastructure to meet Fast Phones's forecasted DC power demand. Fast Phones must specify on its Initial or Subsequent Application the power level it wishes to be able to draw from AT&T's power plant for each

existing collocation arrangement Fast Phones converts to the FL Option or for any new collocation arrangements Fast Phones establishes under the FL Option.

8.9.9.2 AT&T, at any time and at its own expense, shall have the right to verify the accuracy of Fast Phones's power usage under the FL Option for a specific collocation arrangement in a particular AT&T Premises, based on a meter reading(s) taken by AT&T of the amount of power being consumed by Fast Phones's collocation arrangement. AT&T may perform its own meter reading(s) via any method it chooses, such as, but not limited to, a clamp-on ammeter. If the meter reading(s) varies by more than ten percent (10%) or five (5) amps from the power usage that has been requested by Fast Phones for the collocation arrangement, under the FL Option, the Parties agree to work cooperatively to reconcile such discrepancy and establish the appropriate usage figure in a reasonable and expeditious manner. If the Parties substantiate AT&T's reading, then AT&T shall adjust Fast Phones's billing to reflect AT&T's power reading beginning with the first day of the month immediately following the date of the last metered reading taken by AT&T.

8.9.9.3 AT&T shall assess Fast Phones a monthly recurring charge for DC power under the FL Option, as set forth in Exhibit B. Fast Phones shall notify AT&T of any change in its DC power usage by submitting a Subsequent Application, which reflects the new DC power level desired by Fast Phones. The requested change in DC power usage will be reflected in Fast Phones's next scheduled monthly billing cycle.

8.9.10 Tennessee Caged Collocation Power Usage Metering Option. In Central Offices in Tennessee only, Fast Phones may request that DC power provisioned by AT&T to Fast Phones's caged Collocation Space be assessed pursuant to the orders entered by the Tennessee Regulatory Authority in Dockets 97-01262, 99-00430, and 00-00544 for Collocation for Tennessee. By electing the TRA Option, Fast Phones accepts the TRA rates, terms and conditions of Exhibit C in their entirety in conjunction with the other terms and conditions of Attachment 4.

8.9.11 Georgia Caged Collocation Power Usage Metering Option. - In Georgia, Fast Phones may request that DC power provisioned by AT&T to Fast Phones's Collocation Space be assessed pursuant to Georgia Public Service Commission Order Docket No. 14361-U ("Order"). AT&T will assess Fast Phones for -48V DC power using the actual number of load Amps measured. The power circuits may be fed from either an AT&T BDFB or Fast Phones's BDFB. These recurring power charges will be assessed by AT&T on the Space Acceptance Date or Space Ready Date, whichever is appropriate, pursuant to Section 8.3.

8.9.11.1 Upon Fast Phones's election of the power metering option Fast Phones will convert existing caged collocation arrangements to the power metering rate structure. The recurring power charges that are contained Exhibit B of this Attachment will be assessed on the Space Ready Date associated with the Subsequent Application submitted by Fast Phones to convert an existing caged collocation arrangement to the metered power rates.

8.9.11.2 Pursuant to the Order, Fast Phones shall provide a Fluke Model 189 AC/DC multimeter and Fluke Model i410 clamp-on ammeter probe for each central office where they have requested metered power. One copy of the FlukeView software must also be provided for each Fluke 189 multimeter, and each copy must comply with Fluke copyrights.

8.9.11.3 Fast Phones may, at its sole cost and expense, install its own meters on its BDFB(s) located in its own caged Collocation Space(s) and notify AT&T of the option of using such meters for the purposes of measuring Fast Phones's actual power usage. In such case, AT&T, or its AT&T Certified Supplier, will have the option of reading and recording the actual power usage from either the meter installed on Fast Phones's own BDFB(s) or via the aforementioned Fluke 189 multimeter equipped with a Fluke i410 clamp-on ammeter probe.

8.9.11.4 AT&T, at its sole option and at its own cost, may choose to purchase, install, and use its own ammeter measurement device. The usage reading for the option elected by AT&T shall be used for purposes of calculating the DC power usage billing.

8.9.11.5 AT&T, or its AT&T Certified Supplier, will perform all metering activities, to measure the actual power usage being drawn by Fast Phones's collocation equipment on both the A and B power feeds. The charge will be the sum of both the A and B power feeds and will be based upon either an instantaneous reading or busy hour average current reading, depending on the capabilities of the ammeter measurement device.

8.9.11.6 If AT&T, or its AT&T Certified Supplier, requires access to Fast Phones's caged Collocation Space(s) for purposes of measuring the power usage, AT&T or its AT&T Certified Supplier shall provide Fast Phones with a minimum of forty-eight (48) hours (two business days) notice that access is required. Fast Phones shall respond to such request for access within twenty-four (24) hours for the purpose of establishing the date and time of access to Fast Phones's caged Collocation Space(s). Once the date and time of access to Fast Phones's caged Collocation Space(s) has been agreed upon, Fast Phones and AT&T, or its AT&T Certified Supplier, shall adhere to the agreed upon date and time, or provide a minimum of three (3) hours notice to the other Party if the original appointment(s) will be missed or must be canceled and rescheduled. Once a mutually agreed upon date and time are established and Fast Phones does not provide minimum of three (3) hours notice, AT&T's Certified Supplier will only remain at the site for thirty (30) minutes. After thirty (30) minutes the appointment will be considered missed by Fast Phones.

8.9.11.7 If Fast Phones fails to provide access to its caged Collocation Space(s) or fails to provide AT&T, or its AT&T Certified Supplier, with sufficient notification of the missed appointment(s), as noted above, then Fast Phones shall pay the nonrecurring "Additional Meter Reading Trip Charge", as set forth in Exhibit B of this Attachment, for each additional meter reading trip that must be rescheduled to measure Fast Phones's power usage for such caged Collocation

Space(s). Fast Phones and the AT&T Certified Supplier may jointly agree to less stringent notification requirements to address, for example, any service interruption or restoration of service situations, on a location-by-location basis.

8.9.11.8 For each new caged collocation arrangement, Fast Phones shall indicate on Fast Phones's Initial Application that they are electing to have metered power. For each location that Fast Phones wishes to convert to metered power Fast Phones will submit a Subsequent Application and agrees to include in the Comments section of the Subsequent Application the following comment:

This Subsequent Application is Fast Phones's certification that Fast Phones is opting to convert this caged collocation arrangement to metered power and will permit AT&T, or the AT&T Certified Supplier, to measure its actual power usage on all power feeds.

8.9.11.9 AT&T will bill Fast Phones a Power Reconfiguration Only Application Fee, as set forth in Exhibit B of this Attachment, on the date that AT&T provides an Application Response to each Subsequent Application submitted by Fast Phones converting its caged collocation arrangements to the metered power rates. AT&T shall then arrange for the measurement of Fast Phones's actual power usage on each power feed (each A and B power feed) once each quarter at each of Fast Phones's caged collocation arrangements for which Fast Phones has submitted an Initial or Subsequent Application electing metered power.

8.9.11.10 Based upon the actual power usage measurement taken by AT&T or the AT&T Certified Supplier, AT&T shall assess Fast Phones for power usage for the following quarter based upon Fast Phones's actual metered usage for each power feed (both the A and B power feeds) or a minimum of ten (10) amps of –48V DC power usage for the sum of the A and B feeds for each power cable, whichever is greater. Such usage shall then be multiplied by the rate for Load Amps either with an AT&T BDFB or with Fast Phones BDFB as set forth in Exhibit B of this Attachment, to determine the appropriate monthly recurring power usage charge that will be billed to Fast Phones for the following three (3) months or until the next power usage measurement is taken, whichever is later.

8.9.11.11 Either Party, within fifteen (15) days of notice of the usage measurement established by the scheduled meter reading, may challenge the accuracy of that reading by requesting a new reading. If Fast Phones requests that an unscheduled (prior to the next scheduled quarterly power reading date) power usage reading be taken, then Fast Phones will be responsible for paying the "Additional Meter Reading Trip Charge" contained in Exhibit B of this Attachment. If AT&T requests a power usage reading be taken in this instance, then Fast Phones will not be charged the "Additional Meter Reading Trip Charge" for the unscheduled meter reading. If the readings vary by more than ten (10) % or five (5) Amps, whichever is greater, the Parties shall work cooperatively to reconcile such discrepancies and establish the appropriate usage figure in a reasonable and expeditious manner. If the readings do not vary outside these ranges, the initial

reading will be used to calculate Fast Phones's AC usage charge for the next three (3) months.

8.9.11.12 AT&T, at any time and at its own expense, shall have the right to verify the accuracy of Fast Phones's BDFB meter by performing its own meter reading via an alternate method, such as, but not limited to, an ammeter. If the meter readings vary by more than ten (10) % or five (5) Amps, whichever is greater, the Parties agree to perform a joint investigation. If Fast Phones's BDFB meter is found to be in error, then Fast Phones agrees to recalibrate, repair, or replace its meter as required. The Parties recognize that the meter readings discussed in this Attachment are instantaneous readings that can experience minor fluctuations due to usage traffic, voltage fluctuations, and calibration of the meters themselves. The readings must vary by more than ten (10) % or five (5) Amps, whichever is greater, before any recalibration, repair, or replacement will be required. If the AT&T reading is substantiated, AT&T shall adjust Fast Phones's billing retroactive to the beginning of the quarter for which the last meter reading was taken.

8.9.11.13 When Fast Phones submits the appropriate Initial or Subsequent Application for a specific caged collocation arrangement in a particular AT&T Premises, AT&T will provide the associated Application Response pursuant to Section 6 above. It will then be the responsibility of Fast Phones to submit a BFFO. After AT&T receives the BFFO from Fast Phones, the Initial or Subsequent Application will be completed by AT&T within the provisioning intervals contained in Section 7 above and Fast Phones will be notified of the Space Ready Date or when the appropriate record and database changes have been made by AT&T to reflect Fast Phones's conversion to the metered power rates (which will be considered the "Space Ready Date" for purposes of a Subsequent Application submitted to convert a specific caged collocation arrangement in a particular AT&T Premises to the metered power rates).

8.9.11.14 AT&T will not permit Fast Phones to elect an earlier Space Acceptance Date than the Space Ready Date for any request submitted via a Subsequent Application for an existing caged collocation arrangement. When a Subsequent Application is used to elect metered power and there are no other changes requested, billing for the recurring charges associated with metered power will begin upon the Space Ready Date. If Fast Phones occupies the space prior to the Space Ready Date, for Initial Application requests only, the date Fast Phones occupies the space will be deemed the new Space Acceptance Date and billing for metered power will begin on that date. When Fast Phones moves to metered power the number of fused amps of DC Power requested by Fast Phones on its Initial or Subsequent Application will be used for calculating the number of amps to be billed until such time as AT&T or its AT&T Certified Supplier can perform, under the currently existing quarterly meter reading schedule, a reading of Fast Phones's power usage for the requested caged Collocation Space. As soon as this reading has been taken, AT&T will adjust Fast Phones's billing accordingly to reflect the actual metered usage back to the Space Acceptance Date. AT&T will also use this

reading for billing purposes until the next quarterly meter reading is performed by AT&T or its AT&T Certified Supplier.

8.9.11.15 Fast Phones agrees to submit a Subsequent Application to notify AT&T when Fast Phones has removed or installed telecommunications equipment in Fast Phones's physical Collocation Space to ensure that Fast Phones's existing fused DC power capacity is sufficiently engineered to accommodate the power requirements associated with the installation of additional equipment in Fast Phones's Collocation Space. An associated change in power usage will be reflected in the next quarterly power measurement billing cycle.

8.9.11.16 AT&T will bill Fast Phones a monthly recurring charge per caged Collocation Space for each arrangement that Fast Phones has converted to metered power or for new caged Collocation Spaces under the election of metered power. This "Meter Reading" monthly recurring rate element will be assessed per circuit for each circuit read by AT&T or its AT&T Certified Supplier, at the rates set forth in Exhibit B.

8.9.12 In Alabama and Louisiana, Fast Phones has the option to purchase power directly from an electric utility company. Under such option, Fast Phones is responsible for contracting with the electric utility company for its own power feed and meter and is financially responsible for purchasing all equipment necessary to accomplish the arrangement, including inverters, batteries, power boards, bus bars, BDFBs, backup power supplies and cabling. The actual work to install this arrangement must be performed by an AT&T Certified Supplier hired by Fast Phones. Fast Phones's AT&T Certified Supplier must comply with all applicable safety codes, including the NEC and National Electric Safety Code (NESC) standards, in the installation of this power arrangement. If Fast Phones currently has power supplied by AT&T, Fast Phones may request to change its Collocation Space to obtain power from an electric utility company by submitting a Subsequent Application. AT&T will waive the application fee for this Subsequent Application if no other changes are requested therein. Any floor space, cable racking, etc., utilized by Fast Phones in provisioning said power will be billed by AT&T on an ICB basis.

8.9.13 In South Carolina, Fast Phones has the option to purchase power directly from an electric utility company where technically feasible and where space is available in a requested AT&T Premises. Under such option, Fast Phones is responsible for contracting with the electric utility company for its own power feed and meter, and is financially responsible for purchasing all equipment necessary to accomplish the conversion of the commercial AC power to DC power, including inverters, batteries, power boards, bus bars, BDFBs, backup power supplies and power cabling. The actual work to install this arrangement must be performed by an AT&T Certified Supplier hired by Fast Phones. Fast Phones's AT&T Certified Supplier must comply with all applicable national, regional, state and local safety, electrical, fire and building codes, including the NESC standards, in the installing of this power arrangement, just as AT&T is required to comply with these codes. Fast Phones must submit an application to AT&T for the appropriate

amount of Collocation Space that Fast Phones requires in order to install this type of power arrangement. AT&T will evaluate the request and determine if the appropriate amount of space is available within the AT&T Premises for the installation of Fast Phones's power equipment and facilities. This type of power arrangement must be located in an appropriate area in the AT&T Premises that has been properly conditioned for the installation of power equipment and conforms to the applicable national, regional, state and local safety, electrical, fire and building codes. AT&T shall waive the application fee or any other nonrecurring charge that would otherwise be due from a CLEC that decides to reconfigure an existing collocation power arrangement so as to purchase power directly from an electric utility company as provided herein. Fast Phones shall be responsible for the recurring charges associated with the additional space needed in the AT&T Premises for this type of power arrangement, including space required to place associated power-related equipment and facilities (i.e., batteries, generator, fuse panel, power meter, etc.). If there is no space available for this type of power arrangement in the requested AT&T Premises, AT&T may seek a waiver of these requirements from the Commission for the AT&T Premises requested. Fast Phones would have the option to order its power needs directly from AT&T.

8.10 Central Office Cable Installation. Cable Installation fees will be assessed on a per entrance cable basis. This nonrecurring charge will be billed by AT&T upon receipt of Fast Phones's BFFO. Charges for cable racking, cable support structure and entrance fiber structure are recurring fees and will also be assessed according to the rates set forth in Exhibit B.

8.11 Central Office Cable Records. Cable Records charges apply for work activities required to build or remove existing cable records assigned to Fast Phones in AT&T's database systems. The VG/DS0 per cable record charge is for a maximum of thirty-six hundred (3,600) records per request. The fiber cable record charge is for a maximum of ninety-nine (99) records per request. Cable Record fees will be assessed as a nonrecurring charge, upon receipt of Fast Phones's BFFO, in all AT&T states, except Louisiana. In Louisiana, Cable Record fees will be assessed on a monthly recurring charge basis, upon receipt of Fast Phones's BFFO. All charges will be assessed the rates set forth in Exhibit B.

8.12 Security Escort. After Fast Phones has used its one (1) accompanied site visit, pursuant to Section 5.12.1 above, and prior to Fast Phones's completion of the AT&T Security Training requirements, contained in Section 12 below, a security escort will be required when Fast Phones's employees, approved agent, supplier, or Guest(s) desire access to the entrance manhole or an AT&T Premises. The rates for security escort service are assessed pursuant to the fee schedule contained in Exhibit B, beginning with the scheduled escort time agreed to by the Parties. AT&T will wait for one-half (1/2) hour after the scheduled escort time to provide such requested escort service and Fast Phones shall pay for such half-hour charges in the event Fast Phones's employees, approved agent, supplier or Guest(s) fails to show up for the scheduled escort appointment.

8.13 Other. If no collocation rate element and associated rate is identified in Exhibit B, the Parties, upon request by either Party, will negotiate the rate for the specific collocation service or function identified in this Attachment.

9 Insurance

9.1 Fast Phones shall, at its sole cost and expense, procure, maintain, and keep in force insurance as specified in this Section and underwritten by insurance companies licensed to do business in the states applicable under this Agreement and having a Best's Insurance Rating of A.

9.2 Fast Phones shall maintain the following specific coverage:

9.2.1 Commercial General Liability coverage in the amount of ten million dollars ($10,000,000) or a combination of Commercial General Liability and Excess/Umbrella coverage totaling not less than ten million dollars ($10,000,000). AT&T shall be named as an Additional Insured on the Commercial General Liability policy as specified herein.

9.2.2 Statutory Workers Compensation coverage and Employers Liability coverage in the amount of one hundred thousand dollars ($100,000) each accident, one hundred thousand dollars ($100,000) each employee by disease, and five hundred thousand dollars ($500,000) policy limit by disease.

9.2.3 All Risk Property coverage on a full replacement cost basis insuring all of Fast Phones's real and personal property situated on or within an AT&T Premises.

9.2.4 Fast Phones may elect to purchase business interruption and contingent business interruption insurance, having been advised that AT&T assumes no liability for loss of profit or revenues should an interruption of service occur.

9.3 The limits set forth in Section 9.2 above may be increased by AT&T from time to time during the term of this Agreement, upon thirty (30) days notice to Fast Phones, to at least such minimum limits as shall then be customary with respect to comparable occupancy of AT&T structures.

9.4 All policies purchased by Fast Phones shall be deemed to be primary and not contributing to or in excess of any similar coverage purchased by AT&T. All insurance must be in effect on or before the date equipment is delivered to AT&T's Premises and shall remain in effect for the term of this Agreement or until all of Fast Phones's property has been removed from AT&T's Premises, whichever period is longer. If Fast Phones fails to maintain required coverage, AT&T may pay the premiums thereon and seek reimbursement of same from Fast Phones.

9.5 Fast Phones shall submit certificates of insurance reflecting the coverage required pursuant to this Section within a minimum of ten (10) business days prior to the commencement of any work in the Collocation Space. Failure to meet this interval may result in construction and equipment installation delays. Fast Phones shall arrange for AT&T to receive thirty (30) business days' advance notice of

cancellation or non-renewal from Fast Phones's insurance company. Fast Phones shall forward a certificate of insurance and notice of cancellation/non-renewal to AT&T at the following address:

AT&T Southeast
Collocation Service Center
600 North 19th Street
22nd Floor
Birmingham, Al 35203

9.6 Fast Phones must conform to recommendations made by AT&T's fire insurance company to the extent AT&T has agreed to, or shall hereafter agree to, such recommendations.

9.7 Self Insurance. If Fast Phones's net worth exceeds five hundred million dollars ($500,000,000), Fast Phones may elect to request self-insurance status in lieu of obtaining any of the insurance required in Section 9.2 above. Fast Phones shall provide audited financial statements to AT&T thirty (30) days prior to the commencement of any work in the Collocation Space. AT&T shall then review such audited financial statements and respond in writing to Fast Phones in the event that self-insurance status is not granted to Fast Phones. If AT&T approves Fast Phones for self-insurance, Fast Phones shall annually furnish to AT&T, and keep current, evidence of such net worth that is attested to by one of Fast Phones's corporate officers. The ability to self-insure shall continue so long as Fast Phones meets all of the requirements of this Section. If Fast Phones subsequently no longer satisfies the requirements of this Section, Fast Phones is required to purchase insurance as indicated by Section 9.2 above.

9.8 The net worth requirements set forth in Section 9.7 above may be increased by AT&T from time to time during the term of this Agreement upon thirty (30) days' notice to Fast Phones to at least such minimum limits as shall then be customary with respect to comparable occupancy of an AT&T Premises.

9.9 Failure to comply with the provisions of this Section will be deemed a material breach of this Attachment.

10 Mechanics Lien

10.1 If any mechanics lien or other liens are filed against property of either Party (AT&T or Fast Phones), or any improvement thereon by reason of or arising out of any labor or materials furnished or alleged to have been furnished or to be furnished to or for the other Party or by reason of any changes, or additions to said property made at the request or under the direction of the other Party, the other Party directing or requesting those changes shall, within thirty (30) business days after receipt of written notice from the Party against whose property said lien has been filed, either pay such lien or cause the same to be bonded off the affected property in the manner provided by law. The Party causing said lien to be placed against the property of the other shall also defend at its sole cost and expense, on behalf of the other, any action, suit or proceeding which may be brought for the enforcement of such liens and shall pay any damage and discharge any judgment

entered thereon.

11 Inspections

11.1 AT&T may conduct an inspection of Fast Phones's equipment and facilities in Fast Phones's Collocation Space(s) prior to the activation of facilities and/or services between Fast Phones's equipment and equipment of AT&T. AT&T may conduct an inspection if Fast Phones adds equipment and may otherwise conduct routine inspections at reasonable intervals mutually agreed upon by the Parties. AT&T shall provide Fast Phones with a minimum of forty-eight (48) hours or two (2) business days, whichever is greater, advance notice of all such inspections. All costs of such inspections shall be borne by AT&T.

12 Security and Safety Requirements

12.1 Unless otherwise specified, Fast Phones will be required, at its own expense, to conduct a statewide investigation of criminal history records for each Fast Phones employee hired in the past five (5) years being considered for work on an AT&T Premises, for the states/counties where the Fast Phones employee has worked and lived for the past five (5) years. Where state law does not permit statewide collection or reporting, an investigation of the applicable counties is acceptable. Fast Phones shall not be required to perform this investigation if an affiliated company of Fast Phones has performed an investigation of the Fast Phones employee seeking access, if such investigation meets the criteria set forth above. This requirement will not apply if Fast Phones has performed a pre-employment statewide investigation of criminal history records of the Fast Phones employee for the states/counties where the Fast Phones employee has worked and lived for the past five (5) years or, where state law does not permit a statewide investigation, an investigation of the applicable counties.

12.2 Fast Phones will be required to administer to its personnel assigned to the AT&T Premises security training either provided by AT&T, or meeting criteria defined by AT&T at AT&T's Interconnection Web site, www.interconnection.bellsouth.com/guides.

12.3 Fast Phones shall provide its employees and agents with picture identification, which must be worn and visible at all times while in Fast Phones's Collocation Space or other areas in or around the AT&T Premises. The photo identification card shall bear, at a minimum, the employee's name and photo and Fast Phones's name. AT&T reserves the right to remove from an AT&T Premises any employee of Fast Phones not possessing identification issued by Fast Phones or who has violated any of AT&T's policies as outlined in the CLEC Security Training documents. Fast Phones shall hold AT&T harmless for any damages resulting from such removal of Fast Phones's personnel from an AT&T Premises. Fast Phones shall be solely responsible for ensuring that any Guest(s) of Fast Phones is in compliance with all subsections of this Section.

12.4 Fast Phones shall not assign to the AT&T Premises any personnel with records of felony criminal convictions. Fast Phones shall not assign to the AT&T Premises any personnel with records of misdemeanor convictions, except for misdemeanor

traffic violations, without advising AT&T of the nature and gravity of the offense(s). AT&T reserves the right to refuse building access to any of Fast Phones's personnel who have been identified to have misdemeanor criminal convictions. Notwithstanding the foregoing, in the event Fast Phones chooses not to advise AT&T of the nature and gravity of any misdemeanor conviction, Fast Phones may, in the alternative, certify to AT&T that it shall not assign to the AT&T Premises any personnel with records of misdemeanor convictions (other than misdemeanor traffic violations).

12.4.1 Fast Phones shall not knowingly assign to the AT&T Premises any individual who was a former employee of AT&T and whose employment with AT&T was terminated for a criminal offense, whether or not AT&T sought prosecution of the individual for the criminal offense.

12.4.2 Fast Phones shall not knowingly assign to the AT&T Premises any individual who was a former supplier of AT&T and whose access to an AT&T Premises was revoked due to the commission of a criminal offense, whether or not AT&T sought prosecution of the individual for the criminal offense.

12.5 For each Fast Phones employee or agent hired by Fast Phones within the last five (5) years, who requires access to an AT&T Premises to perform work in Fast Phones Collocation Space(s), Fast Phones shall furnish AT&T certification that the aforementioned background check and security training were completed. This certification must be provided to and approved by AT&T before an employee or agent will be granted such access to an AT&T Premises. The certification will contain a statement that no felony convictions were found and certify that the employee completed the security training. If the employee's criminal history includes misdemeanor convictions, Fast Phones will disclose the nature of the convictions to AT&T at that time. In the alternative, Fast Phones may certify to AT&T that it shall not assign to the AT&T Premises any personnel with records of misdemeanor convictions, other than misdemeanor traffic violations.

12.5.1 For all other Fast Phones employees requiring access to an AT&T Premises pursuant to this Attachment, Fast Phones shall furnish AT&T, prior to an employee gaining such access, a certification that the employee is not subject to the requirements of Section 12.5 above and that security training was completed by the employee.

12.6 At AT&T's request, Fast Phones shall promptly remove from the AT&T Premises any employee of Fast Phones that AT&T does not wish to grant access to an AT&T Premises: 1) pursuant to any investigation conducted by AT&T, or 2) prior to the initiation of an investigation if an employee of Fast Phones is found interfering with the property or personnel of AT&T or another collocated telecommunications carrier, provided that an investigation shall be promptly commenced by AT&T.

12.7 <u>Security Violations.</u> AT&T reserves the right to interview Fast Phones's employees, agents, suppliers, or Guests in the event of wrongdoing in or around an AT&T Premises or involving AT&T's or another collocated

telecommunications carrier's property or personnel, provided that AT&T shall provide reasonable notice to Fast Phones's Security representative of such interview. Fast Phones and its employees, agents, suppliers, or Guests shall reasonably cooperate with AT&T's investigation into allegations of wrongdoing or criminal conduct committed by, witnessed by, or involving Fast Phones's employees, agents, suppliers, or Guests. Additionally, AT&T reserves the right to bill Fast Phones for all reasonable costs associated with investigations involving its employees, agents, suppliers, or Guests if it is established and mutually agreed in good faith that Fast Phones's employees, agents, suppliers, or Guests are responsible for the alleged act(s). AT&T shall bill Fast Phones for AT&T property, which is stolen or damaged, where an investigation determines the culpability of Fast Phones's employees, agents, suppliers, or Guests and where Fast Phones agrees, in good faith, with the results of such investigation. Fast Phones shall notify AT&T in writing immediately in the event that Fast Phones discovers one of its employees, agents, suppliers, or Guests already working on the AT&T Premises is a possible security risk. Upon request of the other Party, the Party who is the employer shall discipline consistent with its employment practices, up to and including removal from AT&T's Premises, any employee found to have violated the security and safety requirements of this Section. Fast Phones shall hold AT&T harmless for any damages resulting from such removal of Fast Phones's personnel from an AT&T Premises.

12.8 Use of Supplies. Unauthorized use of equipment, supplies or other property by either Party, whether or not used routinely to provide telephone service will be strictly prohibited and handled appropriately. Costs associated with such unauthorized use may be charged to the offending Party, as may be all associated investigative costs.

12.9 Use of Official Lines. Except for non-toll calls necessary in the performance of their work, neither Party shall use the telephone(s) of the other Party on AT&T's Premises. Charges for unauthorized telephone calls may be charged to the offending Party, as may be all associated investigative costs.

12.10 Accountability. Full compliance with the Security requirements of this Section shall in no way limit the accountability of either Party to the other for the improper actions of its employees, agents, suppliers, or Guests.

13 Destruction of Collocation Space

13.1 In the event a Collocation Space is wholly or partially damaged by fire, windstorm, hurricane, tornado, flood or by similar force majeure circumstances to such an extent as to be rendered wholly unsuitable for Fast Phones's permitted use hereunder, then either Party may elect within ten (10) days after such damage, to terminate occupancy of the damaged Collocation Space, and if either Party shall so elect, by giving the other written notice of termination, both Parties shall stand released of and from further liability under the terms hereof. If the Collocation Space shall suffer only minor damage and shall not be rendered wholly unsuitable for Fast Phones's permitted use, or is damaged and the option

to terminate is not exercised by either Party, AT&T covenants and agrees to proceed promptly without expense to Fast Phones, except for improvements not to the property of AT&T, to repair the damage. AT&T shall have a reasonable time within which to rebuild or make any repairs, and such rebuilding and repairing shall be subject to delays caused by storms, shortages of labor and materials, government regulations, strikes, walkouts, and causes beyond the control of AT&T, which causes shall not be construed as limiting factors, but as exemplary only. Fast Phones may, at its own expense, accelerate the rebuild of its Collocation Space and equipment provided, however, that an AT&T Certified Supplier is used and the necessary space preparation has been completed. If Fast Phones's acceleration of the project increases the cost of the project, then those additional charges will be incurred at Fast Phones's expense. Where allowed and where practical, Fast Phones may erect a temporary facility while AT&T rebuilds or makes repairs. In all cases where the Collocation Space shall be rebuilt or repaired, Fast Phones shall be entitled to an equitable abatement of rent and other charges, depending upon the unsuitability of the Collocation Space for Fast Phones's permitted use, until such Collocation Space is fully repaired and restored and Fast Phones's equipment installed therein (but in no event later than thirty (30) days after the Collocation Space is fully repaired and restored). Where Fast Phones has placed an Adjacent Arrangement pursuant to Section 3.4 above, Fast Phones shall have the sole responsibility to repair or replace said Adjacent Arrangement provided herein. Pursuant to this Section, AT&T will restore the associated services to the Adjacent Arrangement.

14 Eminent Domain

14.1 If the whole of a Collocation Space or Adjacent Arrangement shall be taken by any public authority under the power of eminent domain, then this Attachment shall terminate with respect to such Collocation Space or Adjacent Arrangement as of the date possession shall be taken by such public authority and rent and other charges for the Collocation Space or Adjacent Arrangement shall be paid up to that day with a proportionate refund by AT&T of such rent and charges as may have been paid in advance for a period subsequent to the date of the taking. If any part of the Collocation Space or Adjacent Arrangement shall be taken under eminent domain, AT&T and Fast Phones shall each have the right to terminate this Attachment with respect to such Collocation Space or Adjacent Arrangement and declare the same null and void, by written notice of such intention to the other Party within ten (10) days after such taking.

15 Nonexclusivity

15.1 Fast Phones understands that this Attachment is not exclusive and that AT&T may enter into similar agreements with other Parties. Assignment of Collocation Space pursuant to all such agreements shall be determined by space availability and made on a first come, first serve basis.

ENVIRONMENTAL AND SAFETY PRINCIPLES

The following principles provide basic guidance on environmental and safety issues when applying for and establishing physical collocation arrangements.

1. General Principles

1.1 Compliance with Applicable Law. AT&T and Fast Phones agree to comply with applicable federal, state, and local environmental and safety laws and regulations including U.S. Environmental Protection Agency (USEPA) regulations issued under the Clean Air Act (CAA), Clean Water Act (CWA), Resource Conservation and Recovery Act (RCRA), Comprehensive Environmental Response, Compensation and Liability Act (CERCLA), Superfund Amendments and Reauthorization Act (SARA), the Toxic Substances Control Act (TSCA), and Occupational Safety and Healthy Act (OSHA) regulations issued under the OSHA of 1970, as amended and National Fire Protection Association (NFPA), NEC and NESC (Applicable Laws) requirements. Each Party shall notify the other if compliance inspections are conducted by regulatory agencies and/or citations are issued that relate to any aspect of this Attachment.

1.2 Notice. AT&T and Fast Phones shall provide notice to the other, including any Material Safety Data Sheets (MSDSs), of known and recognized physical hazards or Hazardous Chemicals existing on site or brought on site. A Hazardous Chemical inventory list is posted on an OSHA Poster and updated annually at each Central Office. This Poster is normally located near the front entrance of the building or in the lounge area. Each Party is required to provide specific notice for known potential Imminent Danger conditions. Fast Phones should contact 1-800-743-6737 for any AT&T MSDS required.

1.3 Practices/Procedures. AT&T may make available additional environmental control procedures for Fast Phones to follow when working at an AT&T Premises (See Section 2, below). These practices/procedures will represent the regular work practices required to be followed by the employees and suppliers of AT&T for environmental protection. Fast Phones will require its suppliers, agents, Guests, and others accessing the AT&T Premises to comply with these practices. Section 2 below lists the Environmental categories where AT&T practices should be followed by Fast Phones when operating in the AT&T Premises.

1.4 Environmental and Safety Inspections. AT&T reserves the right to inspect the Fast Phones space with proper notification. AT&T reserves the right to stop any Fast Phones work operation that imposes Imminent Danger to the environment, employees or other persons in or around an AT&T Premises.

1.5 Hazardous Materials Brought On Site. Any hazardous materials brought into, used, stored or abandoned at an AT&T Premises by Fast Phones are owned by and considered the property of Fast Phones. Fast Phones will indemnify AT&T for claims, lawsuits or damages to persons or property caused by these materials.

Without prior written AT&T approval, no substantial new safety or environmental hazards can be created by Fast Phones or different hazardous materials used by Fast Phones at an AT&T Premises. Fast Phones must demonstrate adequate emergency response capabilities for the materials used by Fast Phones or remaining at an AT&T Premises.

1.6 Spills and Releases. When contamination is discovered at an AT&T Premises, either Party discovering the condition must notify the other Party. All Spills or Releases of regulated materials will immediately be reported by Fast Phones to AT&T.

1.7 Coordinated Environmental Plans and Permits. AT&T and Fast Phones will coordinate plans, permits or information required to be submitted to government agencies, such as emergency response plans, spill prevention control and countermeasures (SPCC) plans and community reporting. If fees are associated with filing, AT&T and Fast Phones will develop a cost sharing procedure. If AT&T's permit or EPA identification number must be used, Fast Phones must comply with all of AT&T's permit conditions and environmental processes, including environmental "best management practices (BMP)" (see Section 2, below) and the selection of AT&T disposition vendors and disposal sites.

1.8 Environmental and Safety Indemnification. AT&T and Fast Phones shall indemnify, defend and hold harmless the other Party from and against any claims (including, without limitation, third-party claims for personal injury or death or real or personal property damage), judgments, damages (including direct and indirect damages and punitive damages), penalties, fines, forfeitures, costs, liabilities, interest and losses arising in connection with the violation or alleged violation of any Applicable Law or contractual obligation or the presence or alleged presence of contamination arising out of the acts or omissions of the indemnifying Party, its employees, agents, suppliers, or Guests concerning its operations at an AT&T Premises.

2. Categories for Consideration of Environmental Issues

2.1 When performing functions that fall under the following Environmental categories on AT&T's Premises, Fast Phones agrees to comply with the applicable sections of the current issue of AT&T's Environmental and Safety Methods and Procedures (M&Ps), incorporated herein by this reference. Fast Phones further agrees to cooperate with AT&T to ensure that Fast Phones's employees, agents, suppliers and/or Guests are knowledgeable of and satisfy those provisions of AT&T's Environmental M&Ps, which apply to the specific Environmental function being performed by Fast Phones, its employees, agents, suppliers, and/or Guests.

2.2 The most current version of the reference documentation must be requested from Fast Phones's AT&T Regional Contract Manager (RCM).

Environmental Categories	Environmental Issues	Addressed By The Following Documentation
Disposal of hazardous material or other regulated material (e.g., batteries, fluorescent tubes, solvents & cleaning materials)	Compliance with all applicable local, state & federal laws and regulations Pollution liability insurance EVET approval of supplier	Std T&C 450 Fact Sheet Series 17000 Std T&C 660-3 Approved Environmental Vendor List (Contact RCM Representative)
Emergency response	Hazmat/waste release/spill fire safety emergency	Fact Sheet Series 17000 Building Emergency Operations Plan (EOP) (specific to and located on AT&T's Premises)
Contract labor/outsourcing for services with environmental implications to be performed on AT&T Premises (e.g., disposition of hazardous material/waste; maintenance of storage tanks)	Compliance with all applicable local, state and federal laws and regulations Performance of services in accordance withAT&T's environmental M&Ps Insurance	Std T&C 450 Std T&C 450-B (Contact RCM Representative for copy of appropriate E/S M&Ps.) Std T&C 660
Transportation of hazardous material	Compliance with all applicable local, state & federal laws and regulations Pollution liability insurance EVET approval of supplier	Std T&C 450 Fact Sheet Series 17000 Std T&C 660-3 Approved Environmental Vendor List (Contact RCM Representative)
Maintenance/operations work which may produce a waste Other maintenance work	Compliance with all applicable local, state & federal laws and regulations Protection of AT&T employees and equipment	Std T&C 450 29 C.F.R. § 1910.147 (OSHA Standard) 29 C.F.R. § 1910 Subpart O (OSHA Standard)

Janitorial service	All waste removal and disposal must conform to all applicable federal, state and local regulations All Hazardous Material and Waste Asbestos notification and protection of employees and equipment	Procurement Manager (CRES Related Matters)-AT&T Supply Chain Services Fact Sheet Series 17000 GU-BTEN-001BT, Chapter 3 BSP 010-170-001BS (Hazcom)
Manhole cleaning	Compliance with all applicable local, state & federal laws and regulations Pollution liability insurance EVET approval of supplier	Std T&C 450 Fact Sheet 14050 BSP 620-145-011PR Issue A, August 1996 Std T&C 660-3 Approved Environmental Vendor List (Contact RCM Representative)
Removing or disturbing building materials that may contain asbestos	Asbestos work practices	GU-BTEN-001BT, Chapter 3 for questions regarding removing or disturbing materials that contain asbestos, call the AT&T Building Service Center: AL, MS, TN, KY & LA (local area code) 557-6194 FL, GA, NC & SC (local area code) 780-2740

3. Definitions

Generator. Under RCRA, the person whose act produces a Hazardous Waste, as defined in 40 C.F.R. § 261, or whose act first causes a Hazardous Waste to become subject to regulation. The Generator is legally responsible for the proper management and disposal of Hazardous Wastes in accordance with regulations.

Hazardous Chemical. As defined in the U.S. OSHA hazard communications standard (29 C.F.R. § 1910.1200), any chemical which is a health hazard or physical hazard.

Hazardous Waste. As defined in Section 1004 of RCRA.

Imminent Danger. Any conditions or practices at an AT&T Premises which are such that a danger exists which could reasonably be expected to cause immediate death or serious harm to people or immediate significant damage to the environment or natural resources.

Spill or Release. As defined in Section 101 of CERCLA.

4. Acronyms

RCM – Regional Collocation Manager (f/k/a Account Team Collocation Coordinator)

BST – BellSouth Telecommunications

CRES – Corporate Real Estate and Services (formerly PS&M)

DEC/LDEC – Department Environmental Coordinator/Local Department Environmental Coordinator

E/S – Environmental/Safety

EVET – Environmental Vendor Evaluation Team

GU-BTEN-001BT – AT&T Environmental Methods and Procedures

NESC – National Electrical Safety Codes

P&SM – Property & Services Management

Std T&C – Standard Terms & Conditions

COLLOCATION - South Carolina

Att: 4 Exh: B

CATEGORY	RATE ELEMENTS	Interim	Zone	BCS	USOC	RATES($) Rec	Nonrecurring First	Nonrecurring Add'l	Nonrecurring Disconnect First	Nonrecurring Disconnect Add'l	Svc Order Submitted Elec per LSR	Svc Order Submitted Manually per LSR	Incremental Charge - Manual Svc Order vs. Electronic-1st	Incremental Charge - Manual Svc Order vs. Electronic-Add'l	Incremental Charge - Manual Svc Order vs. Electronic-Disc 1st	Incremental Charge - Manual Svc Order vs. Electronic-Disc Add'l
											OSS Rates($)					
							First	Add'l	First	Add'l	SOMEC	SOMAN	SOMAN	SOMAN	SOMAN	SOMAN
PHYSICAL COLLOCATION																
Application																
	Physical Collocation - Initial Application Fee			CLO	PE1BA		1,883.67		0.51							
	Physical Collocation - Subsequent Application Fee			CLO	PE1CA		1,570.10		0.51							
	Physical Collocation - Co-Carrier Cross Connects/Direct Connect, Application Fee, per application			CLO	PE1DT		584.42									
	Physical Collocation Administrative Only - Application Fee			CLO	PE1BL		743.66									
	Physical Collocation - Application Cost, Simple Augment			CLO	PE1KS		594.27		1.21							
	Physical Collocation - Application Cost, Minor Augment			CLO	PE1KM		833.26		1.21							
	Physical Collocation - Application Cost, Intermediate Augment			CLO	PE1K1		1,058.00		1.21							
	Physical Collocation - Application Cost - Major Augment			CLO	PE1KJ		2,409.00		1.21							
Space Preparation																
	Physical Collocation - Floor Space, per sq feet			CLO	PE1PJ	3.95										
	Physical Collocation - Space Enclosure, welded wire, first 50 square feet			CLO	PE1BX	197.69										
	Physical Collocation - Space enclosure, welded wire, first 100 square feet			CLO	PE1BW	219.19										
	Physical Collocation - Space enclosure, welded wire, each additional 50 square feet			CLO	PE1CW	21.50										
	Physical Collocation - Space Preparation - C.O. Modification per square ft.			CLO	PE1SK	2.75										
	Physical Collocation - Space Preparation, Common Systems Modifications-Cageless, per square foot			CLO	PE1SL	3.24										
	Physical Collocation - Space Preparation - Common Systems Modifications-Caged, per cage			CLO	PE1SM	110.16										
	Physical Collocation - Space Preparation - Firm Order Processing			CLO	PE1SJ		602.05									
	Physical Collocation - Space Availability Report, per Central Office Requested			CLO	PE1SR		1,077.57									
Power																
	Physical Collocation - Power, -48V DC Power - per Fused Amp Requested			CLO	PE1PL	9.19										
	Physical Collocation - Power, 120V AC Power, Single Phase, per Breaker Amp			CLO	PE1FB	5.67										
	Physical Collocation - Power, 240V AC Power, Single Phase, per Breaker Amp			CLO	PE1FD	11.36										
	Physical Collocation - Power, 120V AC Power, Three Phase, per Breaker Amp			CLO	PE1FE	17.03										
	Physical Collocation - Power, 277V AC Power, Three Phase, per Breaker Amp			CLO	PE1FG	39.33										
Cross Connects (Cross Connects, Co-Carrier Cross Connects, and Ports)																
	Physical Collocation - 2-wire cross-connect, loop, provisioning			UEANL,UEQ, UNCNX, UEA, UCL, UAL, UHL, UDN, UNCVX	PE1P2	0.0341	12.32	11.83	6.04	5.45						
	Physical Collocation - 4-wire cross-connect, loop, provisioning			UEA, UHL, UNCVX, UNCDX, UCL, UDL	PE1P4	0.0682	12.42	11.90	6.40	5.74						
	Physical Collocation -DS1 Cross-Connect for Physical Collocation, provisioning			WDS1L, WDS1S, UXTD1, ULDD1, USLEL, UNLD1, U1TD1, UNC1X, UEPSR, UEPSB, UEPSE, UEPSP, USL, UEPEX, UEPDX	PE1P1	1.12	22.08	15.96	6.42	5.80						
	Physical Collocation - DS3 Cross-Connect, provisioning			UE3, U1TD3, UXTD3, UXTS1, UNC3X, UNCSX, ULDD3, U1TS1, ULDS1, UNLD3, UEPEX, UEPDX, UEPSR, UEPSB, UEPSE, UEPSP	PE1P3	14.21	20.94	15.23	7.39	5.93						

COLLOCATION - South Carolina

Att: 4 Exh: B

CATEGORY	RATE ELEMENTS	Interim	Zone	BCS	USOC	RATES($) Rec	Nonrecurring First	Nonrecurring Add'l	Nonrecurring Disconnect First	Nonrecurring Disconnect Add'l	Svc Order Submitted Elec per LSR	Svc Order Submitted Manually per LSR	Incremental Charge - Manual Svc Order vs. Electronic- 1st	Incremental Charge - Manual Svc Order vs. Electronic- Add'l	Incremental Charge - Manual Svc Order vs. Electronic- Disc 1st	Incremental Charge - Manual Svc Order vs. Electronic- Disc Add'l
											OSS Rates($)					
							First	Add'l	First	Add'l	SOMEC	SOMAN	SOMAN	SOMAN	SOMAN	SOMAN
	Physical Collocation - 2-Fiber Cross-Connect			CLO, ULDO3, ULD12, ULD48, U1TO3, U1T12, U1T48, UDLO3, UDL12, UDF	PE1F2	2.82	20.94	15.23	7.40	5.93						
	Physical Collocation - 4-Fiber Cross-Connect			ULDO3, ULD12, ULD48, U1TO3, U1T12, U1T48, UDLO3, UDL12, UDF, UDFCX	PE1F4	5.01	25.61	19.90	9.73	8.26						
	Physical Collocation - Co-Carrier Cross Connects/Direct Connect - Fiber Cable Support Structure, per linear foot, per cable.			CLO	PE1ES	0.001										
	Physical Collocation - Co-Carrier Cross Connect/Direct Connect - Copper/Coax Cable Support Structure, per linear foot, per cable.			CLO	PE1DS	0.0015										
	Physical Collocation 2-Wire Cross Connect, Port			UEPSR, UEPSP, UEPSE, UEPSB, UEPSX, UEP2C	PE1R2	0.0341	12.32	11.83	6.04	5.45		15.69				
	Physical Collocation 4-Wire Cross Connect, Port			UEPEX, UEPDD	PE1R4	0.0682	12.42	11.90	6.40	5.74		15.69				
Security																
	Physical Collocation - Security Escort for Basic Time - normally scheduled work, per half hour			CLO	PE1BT		16.96	10.75								
	Physical Collocation - Security Escort for Overtime - outside of normally scheduled working hours on a scheduled work day, per half hour			CLO	PE1OT		22.10	13.89								
	Physical Collocation - Security Escort for Premium Time - outside of scheduled work day, per half hour			CLO	PE1PT		27.23	17.02								
	Physical Collocation - Security Access System, Security System, per Central Office			CLO	PE1AX	74.72										
	Physical Collocation -Security Access System - New Card Activation, per Card Activation (First), per State			CLO	PE1A1	0.0601	27.85									
	Physical Collocation-Security Access System-Administrative Change, existing Access Card, per Request, per State, per Card			CLO	PE1AA		7.81									
	Physical Collocation - Security Access System - Replace Lost or Stolen Card, per Card			CLO	PE1AR		22.83									
	Physical Collocation - Security Access - Initial Key, per Key			CLO	PE1AK		13.13									
	Physical Collocation - Security Access - Key, Replace Lost or Stolen Key, per Key			CLO	PE1AL		13.13									
CFA																
	Physical Collocation - CFA Information Resend Request, per premises, per arrangement, per request			CLO	PE1C9		77.71									
Cable Records - Note: The rates in the First & Additional columns will actually be billed as "Initial I" and "Subsequent S" respectively																
	Physical Collocation - Cable Records, per request			CLO	PE1CR		I 760.98	S 489.20	133.29							
	Physical Collocation, Cable Records, VG/DS0 Cable, per cable record (maximum 3600 records)			CLO	PE1CD		327.65		189.54							
	Physical Collocation, Cable Records, VG/DS0 Cable, per each 100 pair			CLO	PE1CO		4.82		5.91							
	Physical Collocation, Cable Records, DS1, per T1 TIE			CLO	PE1C1		2.26		2.77							
	Physical Collocation, Cable Records, DS3, per T3 TIE			CLO	PE1C3		7.90		9.68							
	Physical Collocation - Cable Records, Fiber Cable, per cable record (maximum 99 records)			CLO	PE1CB		84.68		77.30							
	Physical Collocation, Cable Records,CAT5/RJ45			CLO	PE1C5		2.26		2.77							
Virtual to Physical																
	Physical Collocation - Virtual to Physical Collocation Relocation, per Voice Grade Circuit			CLO	PE1BV		33.00									
	Physical Collocation - Virtual to Physical Collocation Relocation, per DSO Circuit			CLO	PE1BO		33.00									
	Physical Collocation - Virtual to Physical Collocation Relocation, per DS1 Circuit			CLO	PE1B1		52.00									
	Physical Collocation - Virtual to Physical Collocation Relocation, per DS3 Circuit			CLO	PE1B3		52.00									

COLLOCATION - South Carolina

Att: 4 Exh: B

CATEGORY	RATE ELEMENTS	Interim	Zone	BCS	USOC	RATES($) Rec	Nonrecurring First	Nonrecurring Add'l	Nonrecurring Disconnect First	Nonrecurring Disconnect Add'l	Svc Order Submitted Elec per LSR	Svc Order Submitted Manually per LSR	Incremental Charge - Manual Svc Order vs. Electronic- 1st	Incremental Charge - Manual Svc Order vs. Electronic- Add'l	Incremental Charge - Manual Svc Order vs. Electronic- Disc 1st	Incremental Charge - Manual Svc Order vs. Electronic- Disc Add'l
											OSS Rates($)					
							First	Add'l	First	Add'l	SOMEC	SOMAN	SOMAN	SOMAN	SOMAN	SOMAN
	Physical Collocation - Virtual to Physical Collocation In-Place, Per Voice Grade Circuit			CLO	PE1BR		22.43									
	Physical Collocation Virtual to Physical Collocation In-Place, Per DSO Circuit			CLO	PE1BP		22.43									
	Physical Collocation - Virtual to Physical Collocation In-Place, Per DS1 Circuit			CLO	PE1BS		32.61									
	Physical Collocation - Virtual to Physical Collocation In-Place, per DS3 Circuit			CLO	PE1BE		32.61									
Entrance Cable																
	Physical Collocation - Fiber Cable Installation, Pricing, non-recurring charge, per Entrance Cable			CLO	PE1BD		794.22		22.54							
	Physical Collocation - Fiber Cable Support Structure, per Entrance Cable			CLO	PE1PM	21.33										
	Physical Collocation - Fiber Entrance Cable Installation, per Fiber			CLO	PE1ED		3.87									
VIRTUAL COLLOCATION																
Application																
	Virtual Collocation - Application Fee			AMTFS	EAF		1,207.95		0.51							
	Virtual Collocation - Co-Carrier Cross Connects/Direct Connect, Application Fee, per application			AMTFS	VE1CA		584.42									
	Virtual Collocation Administrative Only - Application Fee			AMTFS	VE1AF		743.66									
Space Preparation																
	Virtual Collocation - Floor Space, per sq. ft.			AMTFS	ESPVX	3.95										
Power																
	Virtual Collocation - Power, per fused amp			AMTFS	ESPAX	9.19										
Cross Connects (Cross Connects, Co-Carrier Cross Connects, and Ports)																
	Virtual Collocation - 2-wire cross-connect, loop, provisioning			UEANL, UEA, UDN, UAL, UHL, UCL, UEQ, UNCVX, UNCDX, UNCNX	UEAC2	0.0317	12.32	11.83	6.04	5.45						
	Virtual Collocation - 4-wire cross-connect, loop, provisioning			UEA, UHL, UCL, UDL, UNCVX, UNCDX	UEAC4	0.0634	12.42	11.90	6.40	5.74						
	Virtual collocation - Special Access & UNE,cross-connect per DS1			ULR, UXTD1, UNC1X, ULDD1, U1TD1, USLEL, UNLD1, USL, UEPEX, UEPDX	CNC1X	1.12	22.08	15.96	6.42	5.80						
	Virtual collocation - Special Access & UNE, cross-connect per DS3			USL, UE3, U1TD3, UXTS1, UXTD3, UNC3X, UNCSX, ULDD3, U1TS1, ULDS1, UDLSX, UNLD3, XDEST	CND3X	14.21	20.94	15.23	7.39	5.93						
	Virtual Collocation - 2-Fiber Cross Connects			UDL12, UDLO3, U1T48, U1T12, U1TO3, ULDO3, ULD12, ULD48, UDF	CNC2F	2.86	20.94	15.23	7.40	5.93						
	Virtual Collocation - 4-Fiber Cross Connects			UDL12, UDLO3, U1T48, U1T12, U1TO3, ULDO3, ULD12, ULD48, UDF	CNC4F	5.71	25.61	19.90	9.73	8.26						
	Virtual Collocation - Co-Carrier Cross Connects/Direct Connect - Fiber Cable Support Structure, per linear foot, per cable			AMTFS	VE1CB	0.001										
	Virtual Collocation - Co-Carrier Cross Connects/Direct Connect - Copper/Coax Cable Support Structure, per linear foot, per cable			AMTFS	VE1CD	0.0015										
	Virtual Collocation 2-Wire Cross Connect, Port			UEPSX, UEPSB, UEPSE, UEPSP, UEPSR, UEP2C	VE1R2	0.0317	12.32	11.83	6.04	5.45						
	Virtual Collocation 4-Wire Cross Connect, Port			UEPDD, UEPEX	VE1R4	0.0634	12.42	11.90	6.40	5.74						

COLLOCATION - South Carolina

Att: 4 Exh: B

CATEGORY	RATE ELEMENTS	Interim	Zone	BCS	USOC	RATES($) Rec	Nonrecurring First	Nonrecurring Add'l	Nonrecurring Disconnect First	Nonrecurring Disconnect Add'l	Svc Order Submitted Elec per LSR	Svc Order Submitted Manually per LSR	Incremental Charge - Manual Svc Order vs. Electronic- 1st	Incremental Charge - Manual Svc Order vs. Electronic- Add'l	Incremental Charge - Manual Svc Order vs. Electronic- Disc 1st	Incremental Charge - Manual Svc Order vs. Electronic- Disc Add'l
											OSS Rates($)					
							First	Add'l	First	Add'l	SOMEC	SOMAN	SOMAN	SOMAN	SOMAN	SOMAN
CFA																
	Virtual Collocation - CFA Information Resend Request, per Premises, per Arrangement, per request			AMTFS	VE1QR		77.71									
Cable Records - Note: The rates in the First & Additional columns will actually be billed as "Initial I" & "Subsequent S" respectively																
	Virtual Collocation Cable Records - per request			AMTFS	VE1BA		I 760.98	S 489.20	133.29							
	Virtual Collocation Cable Records - VG/DS0 Cable, per cable record			AMTFS	VE1BB		327.65		189.54							
	Virtual Collocation Cable Records - VG/DS0 Cable, per each 100 pair			AMTFS	VE1BC		4.82		5.91							
	Virtual Collocation Cable Records - DS1, per T1TIE			AMTFS	VE1BD		2.26		2.77							
	Virtual Collocation Cable Records - DS3, per T3TIE			AMTFS	VE1BE		7.90		9.68							
	Virtual Collocation Cable Records - Fiber Cable, per 99 fiber records			AMTFS	VE1BF		84.68		77.30							
	Virtual Collocation Cable Records - CAT 5/RJ45			AMTFS	VE1B5		2.26		2.77							
Security																
	Virtual collocation - Security escort, basic time, normally scheduled work hours			AMTFS	SPTBX		16.96	10.75								
	Virtual collocation - Security escort, overtime, outside of normally scheduled work hours on a normal working day			AMTFS	SPTOX		22.10	13.89								
	Virtual collocation - Security escort, premium time, outside of a scheduled work day			AMTFS	SPTPX		27.23	17.02								
Maintenance																
	Virtual collocation - Maintenance in CO - Basic, per half hour			AMTFS	CTRLX		27.99	10.75								
	Virtual collocation - Maintenance in CO - Overtime, per half hour			AMTFS	SPTOM		36.56	13.89								
	Virtual collocation - Maintenance in CO - Premium per half hour			AMTFS	SPTPM		45.12	17.02								
Entrance Cable																
	Virtual Collocation - Cable Installation Charge, per cable			AMTFS	ESPCX		794.22		22.54							
	Virtual Collocation - Cable Support Structure, per cable			AMTFS	ESPSX	18.66										
COLLOCATION IN THE REMOTE SITE																
Physical Remote Site Collocation																
	Physical Collocation in the Remote Site - Application Fee			CLORS	PE1RA		308.38		168.60							
	Cabinet Space in the Remote Site per Bay/ Rack			CLORS	PE1RB	246.44										
	Physical Collocation in the Remote Site - Security Access - Key			CLORS	PE1RD		13.13									
	Physical Collocation in the Remote Site - Space Availability Report per Premises Requested			CLORS	PE1SR		116.13									
	Physical Collocation in the Remote Site - Remote Site CLLI Code Request, per CLLI Code Requested			CLORS	PE1RE		37.64									
	Remote Site DLEC Data (BRSDD), per Compact Disk, per CO			CLORS	PE1RR		234.50									
	Physical Collocation - Security Escort for Basic Time - normally scheduled work, per half hour			CLORS	PE1BT		16.96	10.75								
	Physical Collocation - Security Escort for Overtime - outside of normally scheduled working hours on a scheduled work day, per half hour			CLORS	PE1OT		22.10	13.89								
	Physical Collocation - Security Escort for Premium Time - outside of scheduled work day, per half hour			CLORS	PE1PT		27.23	17.02								
Adjacent Remote Site Collocation																
	Remote Site-Adjacent Collocation-Application Fee			CLORS	PE1RU		755.62	755.62								
	Remote Site-Adjacent Collocation - Real Estate, per square foot			CLORS	PE1RT	0.134										
	Remote Site-Adjacent Collocation - AC Power, per breaker amp			CLORS	PE1RS	6.27										
NOTE: If Security Escort and/or Add'l Engineering Fees become necessary for adjacent remote site collocation, the Parties will negotiate appropriate rates.																
Virtual Remote Site Collocation																
	Virtual Collocation in the Remote Site - Application Fee			VE1RS	VE1RB		616.76		337.19							
	Virtual Collocation in the Remote Site - Per Bay/Rack of Space			VE1RS	VE1RC	246.44										
	Virtual Collocation in the Remote Site - Space Availability Report per Premises requested			VE1RS	VE1RR		232.25									
	Virtual Collocation in the Remote Site - Remote Site CLLI Code Request, per CLLI Code Requested			VE1RS	VE1RL		75.27									
ADJACENT COLLOCATION																

COLLOCATION - South Carolina

Att: 4 Exh: B

CATEGORY		RATE ELEMENTS	Interim	Zone	BCS	USOC	RATES($)					Svc Order Submitted Elec per LSR	Svc Order Submitted Manually per LSR	Incremental Charge - Manual Svc Order vs. Electronic-1st	Incremental Charge - Manual Svc Order vs. Electronic-Add'l	Incremental Charge - Manual Svc Order vs. Electronic-Disc 1st	Incremental Charge - Manual Svc Order vs. Electronic-Disc Add'l
							Rec	Nonrecurring		Nonrecurring Disconnect		OSS Rates($)					
								First	Add'l	First	Add'l	SOMEC	SOMAN	SOMAN	SOMAN	SOMAN	SOMAN
		Adjacent Collocation - Space Charge per Sq. Ft.			CLOAC	PE1JA	0.0939										
		Adjacent Collocation - Electrical Facility Charge per Linear Ft.			CLOAC	PE1JC	6.40										
		Adjacent Collocation - 2-Wire Cross-Connects			UEANL,UEQ,UEA,UCL, UAL, UHL, UDN	PE1JE	0.0264	12.32	11.83	6.04	5.45						
		Adjacent Collocation - 4-Wire Cross-Connects			UEA,UHL,UDL,UCL	PE1JF	0.0527	12.42	11.90	6.40	5.74						
		Adjacent Collocation - DS1 Cross-Connects			USL	PE1JG	1.03	22.08	15.96	6.42	5.80						
		Adjacent Collocation - DS3 Cross-Connects			UE3	PE1JH	14.00	20.94	15.23	7.39	5.93						
		Adjacent Collocation - 2-Fiber Cross-Connect			CLOAC	PE1JJ	2.37	20.94	15.23	7.40	5.93						
		Adjacent Collocation - 4-Fiber Cross-Connect			CLOAC	PE1JK	4.53	25.61	19.90	9.73	8.26						
		Adjacent Collocation - Application Fee			CLOAC	PE1JB		1,580.20									
		Adjacent Collocation - 120V, Single Phase Standby Power Rate per AC Breaker Amp			CLOAC	PE1JL	5.67										
		Adjacent Collocation - 240V, Single Phase Standby Power Rate per AC Breaker Amp			CLOAC	PE1JM	11.36										
		Adjacent Collocation - 120V, Three Phase Standby Power Rate per AC Breaker Amp			CLOAC	PE1JN	17.03										
		Adjacent Collocation - 277V, Three Phase Standby Power Rate per AC Breaker Amp			CLOAC	PE1JO	39.33										

Attachment 5

Access to Numbers and Number Portability

TABLE OF CONTENTS

1. Non-Discriminatory Access to Telephone Numbers..... 3

2. Local Number Portability 4

3. Service Order Charges..... 5

ACCESS TO NUMBERS AND NUMBER PORTABILITY

1. Non-Discriminatory Access to Telephone Numbers

1.1 During the term of this Agreement, where Fast Phones is utilizing its own switch, Fast Phones shall contact the North American Numbering Plan Administrator (NANPA), or, where applicable, the relevant Number Pool Administrator for the assignment of numbering resources.

1.2 Where AT&T provides resold services to Fast Phones, AT&T will provide Fast Phones with online access to available telephone numbers as defined by applicable FCC rules and regulations on a first come first served basis. Fast Phones acknowledges that such access to numbers shall be in accordance with the appropriate FCC rules and regulations. Fast Phones may designate up to a forecasted six (6) months supply of available numbers as intermediate (an available number provided to Fast Phones) telephone numbers per rate center if the following conditions are met:

1.2.1 Fast Phones must: (1) indicate that all of the intermediate numbers currently held by Fast Phones in each rate center where Fast Phones will be requesting intermediate telephone numbers have six (6) or less months to exhaust; (2) supply projected monthly telephone number demand on a rate center basis for the coming twelve (12) months for each rate center where Fast Phones will be requesting intermediate telephone numbers; and, (3) demonstrate that the utilization level on current intermediate numbers held by Fast Phones in the rate center where Fast Phones is requesting telephone numbers has reached at least seventy-five percent (75%).

1.2.2 The above information will be provided by Fast Phones by submitting to AT&T a fully completed "CO Code Assignments Months To Exhaust Certification Worksheet – TN Level" (MTE Worksheet), Appendix B to the Central Office Code (NXX) Assignments Guidelines, INC 95-0407-008 for each rate center where Fast Phones will be requesting intermediate telephone numbers. The utilization level is calculated by dividing all intermediate numbers currently assigned by Fast Phones to customers by the total number of intermediate numbers held by Fast Phones in the rate center and multiplying the result by one hundred (100).

1.2.3 If fulfilling Fast Phones's request for intermediate numbers results in AT&T having to submit a request for additional telephone numbers to a national numbering administrator (either NANPA CO Code Administration or NeuStar Pooling Administration or their successors), AT&T will submit the required numbering

request to the national numbering administrator to satisfy Fast Phones's request for intermediate numbers. AT&T will also pursue all appropriate steps (including submitting a safety valve request (petition) to the appropriate Commission if the numbering request is denied by the national administrator) to satisfy Fast Phones's request for intermediate numbers. In these cases, AT&T is not obligated to fulfill the request by Fast Phones for intermediate numbers unless, and until, AT&T's request for additional numbering resources is granted.

1.2.4 Fast Phones agrees to supply supporting information for any numbering request and/or safety valve request that AT&T files pursuant to Section 1.2.3 above.

1.3 Fast Phones acknowledges that there may be instances where there is an industry shortage of available telephone numbers in a number plan area (NPA). These instances occur where a jeopardy status has been declared by NANPA and the industry has determined that limiting the assignment of new numbers is the appropriate method to employ until the jeopardy can be alleviated. In such NPA jeopardy situations where assignment of new numbers is restricted per the jeopardy guidelines developed by the industry, AT&T may request that Fast Phones cancel all or a portion of its unassigned intermediate numbers. Fast Phones's consent to AT&T's request shall not be unreasonably withheld.

2. Local Number Portability

2.1 The Parties will offer LNP in accordance with rules, regulations and guidelines adopted by the Commission, the FCC and industry fora.

2.2 Service Management System (SMS) Administration. The Parties will work cooperatively with other local service providers to establish and maintain contracts for the LNP SMS.

2.3 Network Architecture. The Parties agree to adhere to applicable FCC rules and orders governing LNP network architecture.

2.4 Signaling. In connection with LNP, each Party agrees to use SS7 signaling in accordance with applicable FCC rules and orders.

2.5 N-1 Query. The Parties agree to adhere to applicable FCC rules and orders governing LNP N-1 queries.

2.6 Porting of Reserved Numbers and Suspended Lines. Customers of each Party may port numbers, via LNP, that are in a denied state or that are on suspend status. In addition, customers of each Party may port reserved numbers that the customer has paid to reserve. Portable reserved numbers are identified on the Customer Service Record (CSR). In anticipation of porting from one Party to the other Party, a Party's customer may reserve additional telephone numbers and include them with the numbers that are subsequently ported to the other Party. It is not necessary to restore a denied number before it is ported.

2.7 Splitting of Number Groups. The Parties shall permit blocks of subscriber numbers (including, but not limited to, Direct Inward Dial (DID) numbers and MultiServ groups) to be split in connection with an LNP request. AT&T and Fast Phones shall permit customers who port a portion of DID numbers to retain DID service on the remaining portion of numbers. If a Party requests porting a range of DID numbers smaller than a whole block, that Party shall pay the applicable charges for doing so as set forth in Attachment 2. In the event no rate is set forth in Attachment 2, then the Parties shall negotiate a rate for such services.

2.8 The Parties will set Location Routing Number (LRN) unconditional or ten (10) digit triggers where applicable. Where triggers are set, the porting Party will remove the ported number at the same time the trigger is removed.

2.9 A trigger order is a service order issued in advance of the porting of a number. A trigger order 1) initiates call queries to the AIN SS7 network in advance of the number being ported; and 2) provides for the new service provider to be in control of when a number ports.

2.10 Where triggers are not set, the Parties shall coordinate the porting of the number between service providers so as to minimize service interruptions to the customer.

2.11 AT&T and Fast Phones will work cooperatively to implement changes to LNP process flows ordered by the FCC or as recommended by standard industry foras addressing LNP.

2.12 Where Fast Phones utilizes AT&T's LNP Query Service, AT&T shall bill and Fast Phones shall pay the query charge associated with LNP Query Service as set forth in Attachment 2. To receive the LNP Query Service charge set forth in Attachment 2, Fast Phones shall fill out and submit the Interconnection data sheet for AT&T LNP Query Service. The form can be obtained on AT&T's Interconnection Web site under AT&T LNP Query Service and click on forms. Once the form has been filled out and submitted the LNP Query charge will take effect on the approved date. This charge is not subject to the resale discount set forth in Attachment 1.

3. Service Order Charges

3.1 The terms, conditions and rates for OSS utilized in connection with LNP are as set forth in Attachment 6 and Exhibit A of Attachment 2.

Attachment 6

Pre-Ordering, Ordering, Provisioning, Maintenance and Repair

TABLE OF CONTENTS

1. Quality of Pre-Ordering, Ordering, Provisioning, Maintenance and Repair 3

2. Access to Operations Support Systems 3

3. Miscellaneous 8

PRE-ORDERING, ORDERING, PROVISIONING, MAINTENANCE AND REPAIR

1. Quality of Pre-Ordering, Ordering, Provisioning, Maintenance and Repair

1.1 AT&T shall provide to Fast Phones nondiscriminatory access to its OSS and the necessary information contained therein in order that Fast Phones can perform the functions of pre-ordering, ordering, provisioning, maintenance and repair, and billing. AT&T shall provide Fast Phones with all relevant documentation (manuals, user guides, specifications, etc.) regarding business rules and other formatting information as well as practices and procedures necessary to ensure requests are efficiently processed. All documentation will be readily accessible at AT&T's Interconnection Web site. AT&T shall ensure that its OSS are designed to accommodate requests for both current and projected demands of Fast Phones and other CLECs in the aggregate.

2. Access to Operations Support Systems

2.1 AT&T shall provide to Fast Phones nondiscriminatory access to its OSS and the necessary information contained therein in order that Fast Phones can perform the functions of pre-ordering, ordering, provisioning, maintenance and repair, and billing. AT&T shall provide nondiscriminatory access to the OSS through manual and/or electronic interfaces as described in this Attachment. It is the sole responsibility of Fast Phones to obtain the technical capability to access and utilize AT&T's OSS interfaces. Specifications for Fast Phones's access and use of AT&T's electronic interfaces are set forth at AT&T's Interconnection Web site.

2.1.1 Fast Phones agrees to comply with the provisions of the OSS Interconnection Volume Guidelines as set forth at AT&T's Interconnection Web site.

2.2 <u>Pre-Ordering</u>

2.2.1 AT&T will provide electronic access to its OSS and the information contained therein in order that Fast Phones can perform the following pre-ordering functions: service address validation, telephone number selection, service and feature availability, due date information, customer record information and loop makeup information. Mechanized access is provided by electronic interfaces whose specifications for access and use are set forth at AT&T's Interconnection Web site. The process by which the Parties will manage these electronic interfaces to include the development and introduction of new interfaces will be governed by the change management process as described in Section 2.7 below.

2.2.2 AT&T shall provide to Fast Phones electronic access to customer service record information in accordance with the applicable performance intervals referenced in

Attachment 9. If electronic access is not available, AT&T shall provide to Fast Phones such information within twenty-four (24) hours. Fast Phones shall provide to AT&T access to customer record information, including circuit numbers associated with each telephone number where applicable. Fast Phones shall provide such information within four (4) hours after request via electronic access where available. If electronic access is not available, Fast Phones shall provide to AT&T paper copies of customer record information, including circuit numbers associated with each telephone number where applicable. Fast Phones shall provide to AT&T such customer service records within twenty-four (24) hours of a valid request, exclusive of Saturdays, Sundays and holidays.

2.2.3 The Parties agree not to view, copy, or otherwise obtain access to the other Party's customer record information about any of the other Party's customers without that customer's permission. Fast Phones will obtain access to customer record information only in strict compliance with applicable laws, rules, or regulations of the state in which the service is provided. AT&T reserves the right to audit Fast Phones's access to customer record information. If AT&T has reason to believe, through its audit or by any other means, that Fast Phones is accessing customer record information without having obtained the proper customer authorization, AT&T upon reasonable notice to Fast Phones may take corrective action, including but not limited to suspending or terminating Fast Phones's access to AT&T's pre-ordering and ordering OSS, and the provisioning of pending and existing services.

2.3 Ordering

2.3.1 AT&T will make available to Fast Phones electronic interfaces for the purpose of exchanging order information, including order status and completion notification, for non-complex and certain complex resale requests and certain network elements. Specifications for access and use of AT&T's electronic interfaces are set forth at AT&T's Interconnection Web site. The process by which the Parties will manage these electronic interfaces to include the development and introduction of new interfaces will be governed by the change management process as described in Section 2.7 below.

2.3.2 Fast Phones shall place orders for services by submitting a LSR to AT&T. AT&T shall bill Fast Phones an electronic service order charge at the rate set forth in the applicable Attachment to this Agreement for each LSR submitted by means of an electronic interface. AT&T shall bill Fast Phones a manual service order charge at the rate set forth in the applicable Attachment to this Agreement for each LSR submitted by means other than the electronic Interfaces (e.g., mail, fax, courier, etc.). An individual LSR will be identified for billing purposes by its PON.

2.3.2.1 Fast Phones may submit an LSR to request that a customer's service be temporarily suspended, denied, or restored. Alternatively, Fast Phones may submit

a list of such customers if Fast Phones provides a separate PON for each location on the list. AT&T will bill an electronic or manual service order charge for each location.

2.3.2.2 AT&T will bill the electronic or manual service order charge, as applicable, for an LSR, regardless of whether that LSR is later supplemented, clarified or cancelled.

2.3.2.3 Notwithstanding the foregoing, AT&T will not bill an additional electronic or manual service order charge for supplements to any LSR submitted to clarify, correct, change or cancel a previously submitted LSR.

2.3.2.4 AT&T shall return a Firm Order Confirmation (FOC) or LSR clarification in accordance with the applicable performance intervals referenced in Attachment 9. Fast Phones shall provide to AT&T a FOC within twenty-four (24) hours of the receipt from AT&T of a complete and accurate LSR, exclusive of Saturdays, Sundays and holidays. Fast Phones shall provide to AT&T an LSR clarification within twenty-four (24) hours of the receipt from AT&T of an incomplete and inaccurate LSR, exclusive of Saturdays, Sundays and holidays.

2.4 Provisioning

2.4.1 AT&T shall provision services during its regular working hours. To the extent Fast Phones requests provisioning of service to be performed outside AT&T's regular working hours, or the work so requested requires AT&T's technicians or project managers to work outside of regular working hours, overtime charges set forth in AT&T's intrastate Access Services Tariff, Section E13.2, shall apply. Notwithstanding the foregoing, if such work is performed outside of regular working hours by a AT&T technician or project manager during his or her scheduled shift and AT&T does not incur any overtime charges in performing the work on behalf of Fast Phones, AT&T will not assess Fast Phones additional charges beyond the rates and charges specified in this Agreement.

2.4.2 In the event AT&T must dispatch to the customer's location more than once due to incorrect or incomplete information provided by Fast Phones (e.g., incomplete address, incorrect contact name/number, etc.), AT&T will bill Fast Phones for each additional dispatch required to provision the circuit due to the incorrect/incomplete information provided. AT&T will assess the applicable Maintenance of Service rates from BellSouth's FCC No. 1 Tariff, Section 13.3.1.

2.4.3 Cancellation Charges. If Fast Phones cancels an LSR for network elements or resold services subsequent to AT&T's generation of a service order, any costs incurred by AT&T in conjunction with provisioning of Services as requested on the cancelled LSR will be recovered in accordance with the cancellation methodology set forth in the Cancellation Charge Percentage Chart found on AT&T's Interconnection Web site. In addition, AT&T reserves the right to assess

cancellation charges if Fast Phones fails to respond within nine (9) business days to a Missed Appointment order notification.

2.4.3.1 Notwithstanding the foregoing, if Fast Phones places an LSR based upon AT&T's loop makeup information, and such information is inaccurate resulting in the inability of AT&T to provision the network elements requested and another spare compatible facility cannot be found with the transmission characteristics of the network elements originally requested, cancellation charges described in this Section shall not apply. Where Fast Phones places a single LSR for multiple network elements or services based upon loop makeup information, and information as to some, but not all, of the network elements or services is inaccurate, if AT&T cannot provision the network elements or services that were the subject of the inaccurate loop makeup information, Fast Phones may cancel its request for those network elements or services without incurring cancellation charges as described in this Section. In such instance, should Fast Phones elect to cancel the entire LSR, cancellation charges as described in this Section shall apply to those elements and services that were not the subject of inaccurate loop makeup.

2.4.4 Service Date Advancement Charges (Expedites). For Service Date Advancement requests by Fast Phones, Service Date Advancement charges will apply for intervals less than the standard interval as outlined in the AT&T Product and Services Interval Guide. The charges are as set forth in Exhibit A of Attachment 2.

2.4.5 Order Modification Charges. If Fast Phones modifies an order after being sent a FOC from AT&T, the Order Modification Charge (OMC) or Order Modification Charge Additional Dispatch (OMCAD) will be paid by Fast Phones in accordance with Exhibit A of Attachment 2.

2.5 Maintenance and Repair

2.5.1 AT&T will make available to Fast Phones electronic interfaces for the purpose of reporting and monitoring service troubles. Specifications for access and use of AT&T's maintenance and repair electronic interfaces are set forth at AT&T's Interconnection Web site. The process by which the Parties will manage these electronic interfaces to include the development and introduction of new interfaces will be governed by the change management process as described in Section 2.7 below. Requests for trouble repair are billed in accordance with the provisions of this Agreement. AT&T and Fast Phones agree to adhere to AT&T's Operational Understanding. The Operational Understanding may be accessed via AT&T's Interconnection Web site.

2.5.2 If Fast Phones reports a trouble on a AT&T Network Element and no trouble is found in AT&T's network, AT&T will charge Fast Phones a Maintenance of

Service Charge for any dispatching and testing (both inside and outside the CO) required by AT&T in order to confirm the working status. AT&T will assess the Maintenance of Service rates as set forth in BellSouth's FCC No. 1 Tariff, Section 13.3.1.

2.5.2.1 In the event AT&T must dispatch to the customer's location more than once due to incorrect or incomplete information provided by Fast Phones (e.g., incomplete address, incorrect contact name/number, etc.), AT&T will bill Fast Phones for each additional dispatch required to repair the circuit due to the incorrect/incomplete information provided. AT&T will assess the Maintenance of Service rates as set forth in BellSouth's FCC No. 1 Tariff, Section 13.3.1.

2.5.3 If Fast Phones reports a trouble on a resold service and no trouble is found in AT&T's network, AT&T will charge Fast Phones a Trouble Determination Charge or a Trouble Location Charge for any dispatching and testing (both inside and outside the CO) required by AT&T in order to confirm the working status. AT&T will assess the Trouble Determination Charge or Trouble Location Charge from the applicable AT&T tariff.

2.5.3.1 In the event AT&T must dispatch to the customer's location more than once due to incorrect or incomplete information provided by Fast Phones (e.g., incomplete address, incorrect contact name/number, etc.), AT&T will bill Fast Phones for each additional dispatch required to repair the circuit due to the incorrect/incomplete information provided. AT&T will assess the Trouble Determination Charge or Trouble Location Charge from the applicable AT&T tariff.

2.6 Billing. AT&T will provide Fast Phones nondiscriminatory access to billing information as specified in Attachment 7.

2.7 Change Management. The Parties agree that the collaborative change management process known as the Change Control Process (CCP) will be used to manage changes to existing interfaces, introduction of new interfaces and retirement of interfaces. The Parties agree to comply with the provisions of the documented CCP as may be amended from time to time and incorporated herein by reference. The change management process will cover changes to AT&T's electronic interfaces, AT&T's testing environment, associated manual process improvements, and relevant documentation. The process will define a procedure for resolution of change management disputes. Documentation of the CCP as well as related information and processes will be clearly organized and readily accessible to Fast Phones at AT&T's Interconnection Web site.

2.8 Rates. Unless otherwise specified herein, charges for the use of AT&T's OSS, and other charges applicable to pre-ordering, ordering, provisioning and maintenance

and repair, shall be at the rates set forth in the applicable Attachment of this Agreement.

2.9 The Commissions in some states have ordered per element manual additive nonrecurring charges for Network Elements and Other Services ordered by means other than one of the interactive interfaces. These ordered Network Elements and Other Services manual additive nonrecurring charges will apply in these states, rather than the charge per LSR. The per element charges are listed in Exhibit A of Attachment 2.

3. Miscellaneous

3.1 Pending Orders. To the extent that Fast Phones submits an LSR with incomplete, incorrect or conflicting information, AT&T will return the LSR to Fast Phones for clarification. Fast Phones shall respond to the request for clarification within thirty (30) days by submitting a supplemental LSR. If Fast Phones does not submit a supplement LSR within thirty (30) days, AT&T will cancel the original LSR and Fast Phones shall be required to submit a new LSR, with a new PON.

3.2 Single Point of Contact. Fast Phones will be the single point of contact with AT&T for ordering activity for network elements and other services used by Fast Phones to provide services to its customers, except that AT&T may accept a request directly from another CLEC, or AT&T, acting with authorization of the affected customer. Fast Phones and AT&T shall each execute a blanket LOA with respect to customer requests so that prior proof of customer authorization will not be necessary with every request (except in the case of a local service freeze). The Parties shall each be entitled to adopt their own internal processes for verification of customer authorization for requests, provided, however, that such processes shall comply with applicable state and federal law and industry and regulatory guidelines. Pursuant to a request from another carrier, AT&T may disconnect any network element being used by Fast Phones to provide service to that customer and may reuse such network elements or facilities to enable such other carrier to provide service to the customer. AT&T will notify Fast Phones that such a request has been processed but will not be required to notify Fast Phones in advance of such processing.

3.2.1 Neither Party shall prevent or delay a customer from migrating to another carrier because of unpaid bills, denied service, or contract terms.

3.2.2 Use of Facilities. When a customer of Fast Phones elects to discontinue service and to transfer service to another local exchange carrier, including AT&T, AT&T shall have the right to reuse the facilities provided to Fast Phones, regardless whether those facilities are provided as Network Elements or as part of a resold service, and regardless of whether the end user served with such facilities has paid all charges to Fast Phones or has been denied service for nonpayment or otherwise.

AT&T will notify Fast Phones that such a request has been processed after the disconnect order has been completed.

3.3 Contact Numbers. The Parties agree to provide one another with toll-free nation-wide (50 states) contact numbers for the purpose of ordering, provisioning and maintenance of services. Contact numbers for maintenance/repair of services shall be staffed twenty-four (24) hours per day, seven (7) days per week. AT&T will close trouble tickets after making a reasonable effort to contact Fast Phones for authorization to close a ticket. AT&T will place trouble tickets in delayed maintenance status after making a reasonable effort to contact Fast Phones to request additional information or to request authorization for additional work deemed necessary by AT&T.

3.4 Subscription Functions. In cases where AT&T performs subscription functions for an IXC (i.e., PIC and LPIC changes via Customer Account Record Exchange (CARE)), AT&T will in all possible instances provide the affected IXCs with the OCN of the local provider for the purpose of obtaining customer billing account and other customer information required under subscription requirements.

3.4.1 When Fast Phones's customer, served by resale or loop and port combinations, changes its PIC or LPIC, and per AT&T's FCC or state tariff the interexchange carrier elects to charge the customer the PIC or LPIC change charge, AT&T will bill the PIC or LPIC change charge to Fast Phones, which has the billing relationship with that customer, and Fast Phones may pass such charge to the customer.

Attachment 7

Billing

TABLE OF CONTENTS

1. Payment and Billing Arrangements 3

2. Billing Disputes 9

3. Non-Intercompany Settlements 10

BILLING

1. Payment and Billing Arrangements

The terms and conditions set forth in this Attachment shall apply to all services ordered and provisioned pursuant to this Agreement.

1.1 AT&T will bill through the Carrier Access Billing System (CABS), Integrated Billing System (IBS) and/or the Customer Records Information Systems (CRIS) depending on the particular service(s) provided to Fast Phones under this Agreement. AT&T will use its best efforts to format bills in CABS Billing Output Specification (CBOS) standard format. AT&T's billing format may change in accordance with applicable industry standards; provided, however, that AT&T may, in some instances, not apply CBOS standard format for certain types of billing for certain products and services. Billing in a format other than CBOS shall not be the basis of any Fast Phones dispute or withholding of payment.

1.1.1 For any service(s) AT&T receives from Fast Phones, Fast Phones shall bill AT&T in CBOS format.

1.1.2 Any switched access charges associated with interexchange carrier access to the resold local exchange lines will be billed by, and due to AT&T.

1.1.3 AT&T will render bills each month on established bill days for each of Fast Phones's accounts. If either Party requests multiple billing media or additional copies of the bills, the billing Party will provide these at the rates set forth in BellSouth's FCC No. 1 Tariff, Section 13.3.6.3, except for resold services which shall be at the rates set forth in AT&T's Non-Regulated Services Pricing List N6.

1.1.4 AT&T will bill Fast Phones in advance for all services to be provided during the ensuing billing period except charges associated with service usage and nonrecurring charges, which will be billed in arrears.

1.1.4.1 For resold services, charges for services will be calculated on an individual customer account level, including, if applicable, any charge for usage or usage allowances. AT&T will also bill Fast Phones, and Fast Phones will be responsible for and remit to AT&T, all charges applicable to said services including but not limited to 911 and E911 charges, EUCL charges, federal subscriber line charges, telecommunications relay charges, and franchise fees, unless otherwise ordered by a Commission.

1.1.5 AT&T will not perform billing and collection services for Fast Phones as a result of the execution of this Agreement.

1.2 Establishing Accounts and Subsequent State Certifications. After submitting a credit profile and deposit, if required, and after receiving certification as a local exchange carrier from the appropriate Commission, Fast Phones will provide the appropriate AT&T Local Contract Manager responsible for new CLEC activation,

the necessary documentation to enable AT&T to establish accounts for Local Interconnection, Network Elements and Other Services and/or resold services. Such documentation shall include the Application for Master Account, if applicable, proof of authority to provide Telecommunications Services, the appropriate OCN for each state as assigned by the NECA, CIC, if applicable, ACNA, if applicable, AT&T's blanket form LOA, Misdirected Number form, and a tax exemption certificate, if applicable. Notwithstanding anything to the contrary in this Agreement, Fast Phones may not order services under a new account and/or subsequent state certification, established in accordance with this Section until thirty (30) days after all information specified in this Section is received from Fast Phones.

1.2.1 ACNAs. Fast Phones shall provide AT&T with documentation from Telcordia identifying the ACNA assigned to it by Telcordia (as applicable) in the same legal name as reflected in the preamble to this Agreement. Such ACNA will be used by Fast Phones to order services pursuant to this Agreement and will not be shared by Fast Phones with another entity.

1.2.2 Company Identifiers. If Fast Phones needs to change, add to, eliminate or convert its OCN(s), ACNAs and other identifying codes (collectively "Company Identifiers") under which it operates when Fast Phones has already been conducting business utilizing those Company Identifiers, Fast Phones shall follow the Mergers and Acquisitions Process as described on AT&T's Interconnection Web site, and shall be subject to separately negotiated rates, terms and conditions.

1.2.3 Tax Exemption. It is the responsibility of Fast Phones to provide AT&T with a properly completed tax exemption certificate in the current version of the form customarily used by AT&T and at intervals required by the appropriate taxing authorities or reasonably requested by AT&T. A tax exemption certificate must be supplied for each individual Fast Phones entity purchasing Services under this Agreement. Upon AT&T's receipt of a properly completed tax exemption certificate, subsequent billings to Fast Phones will not include those taxes or fees from which Fast Phones is exempt. Prior to receipt of a properly completed exemption certificate, AT&T shall bill, and Fast Phones shall pay all applicable taxes and fees. In the event that Fast Phones believes that it is entitled to an exemption from and refund of taxes with respect to the amount billed prior to AT&T's receipt of a properly completed exemption certificate, AT&T shall assign to Fast Phones its rights to claim a refund of such taxes. If applicable law prohibits the assignment of tax refund rights or requires the claim for refund of such taxes to be filed by AT&T, AT&T shall, after receiving a written request from Fast Phones and at Fast Phones's sole expense, pursue such refund claim on behalf of Fast Phones, provided that Fast Phones promptly reimburses AT&T for any costs and expenses incurred by AT&T in pursuing such refund claim; and, provided further, that AT&T shall have the right to deduct any such outstanding costs and expenses from the amount of any refund obtained prior to remitting such refund to Fast Phones or to deduct any such outstanding costs and expenses from any amounts

owed by AT&T to Fast Phones if no refund is obtained. Fast Phones shall be solely responsible for the computation, tracking, reporting and payment of all taxes and fees associated with the services provided by Fast Phones to its customers.

1.3 Deposit Policy. Prior to the inauguration of service or, thereafter, upon AT&T's request, Fast Phones shall complete the AT&T Credit Profile (AT&T form) and provide information to AT&T regarding Fast Phones's credit and financial condition. Based on AT&T's analysis of the AT&T Credit Profile and other relevant information regarding Fast Phones's credit and financial condition, AT&T reserves the right to require Fast Phones to provide AT&T with a suitable form of security deposit for Fast Phones's account(s). If, in AT&T's sole discretion, circumstances so warrant and/or Fast Phones's gross monthly billing has increased, AT&T reserves the right to request additional security (or to require a security deposit if none was previously requested) and/or file a Uniform Commercial Code (UCC-1) security interest in Fast Phones's "accounts receivables and proceeds".

1.3.1 Security deposit shall take the form of cash, an irrevocable letter of credit (AT&T form), surety bond (AT&T form) or, in AT&T's sole discretion, some other form of security proposed by Fast Phones and accepted by AT&T. Any such security deposit shall in no way release Fast Phones from its obligation to make complete and timely payments of its bill(s). If AT&T requires Fast Phones to provide a security deposit, Fast Phones shall provide such security deposit prior to the inauguration of service or within fifteen (15) days of AT&T's request, as applicable. Security deposit request notices will be sent to Fast Phones via certified mail or overnight delivery. Such notice period will start the day after the deposit request notice is rendered by certified mail or overnight delivery. Interest on a cash security deposit shall accrue and be applied or refunded in accordance with the terms in AT&T's GSST.

1.3.2 Security deposits collected under this Section shall not exceed two (2) months' estimated billing for services pursuant to this Agreement. Estimated billings are calculated based upon the monthly average of the previous six (6) months current billings, if Fast Phones has received service from AT&T during such period at a level comparable to that anticipated to occur over the next six (6) months. If either Fast Phones or AT&T has reason to believe that the level of service to be received during the next six (6) months will be materially higher or lower than received in the previous six (6) months, Fast Phones and AT&T shall agree on a level of estimated billings based on all relevant information.

1.3.3 In the event Fast Phones fails to provide AT&T with a suitable form of security deposit or additional security deposit as required herein, defaults on its account(s), or otherwise fails to make any payment or payments required under this Agreement in the manner and within the time required, service to Fast Phones may be Suspended, Discontinued or Terminated in accordance with the terms of Section 1.5 below. Upon Termination of services, AT&T shall apply any security deposit to Fast Phones's final bill for its account(s). If no bill is rendered to Fast

Phones, AT&T shall, nevertheless, apply any security deposit to Fast Phones's outstanding balance.

1.3.3.1 At least seven (7) days prior to the expiration of any letter of credit provided by Fast Phones as security under this Agreement, Fast Phones shall renew such letter of credit or provide AT&T with evidence that Fast Phones has obtained a suitable replacement for the letter of credit. If Fast Phones fails to comply with the foregoing, AT&T shall thereafter be authorized, in its sole discretion, to draw down the full amount of such letter of credit and utilize the cash proceeds as security for Fast Phones accounts(s). If Fast Phones provides a security deposit or additional security deposit in the form of a surety bond as required herein, Fast Phones shall renew the surety bond or provide AT&T with evidence that Fast Phones has obtained a suitable replacement for the surety bond at least seven (7) days prior to the cancellation date of the surety bond. If Fast Phones fails to comply with the foregoing, AT&T shall thereafter be authorized, in its sole discretion, to take action on the surety bond and utilize the cash proceeds as security for Fast Phones's account(s). If the credit rating of any bonding company that has provided Fast Phones with a surety bond provided as security hereunder has fallen below B, AT&T will provide written notice to Fast Phones that Fast Phones must provide a replacement bond or other suitable security within fifteen (15) days of AT&T's written notice. If Fast Phones fails to comply with the foregoing, AT&T shall thereafter be authorized, in its sole discretion, to take action on the surety bond and utilize the cash proceeds as security for Fast Phones's account(s). Notwithstanding anything contained in this Agreement to the contrary, AT&T shall be authorized, in its sole discretion, to draw down the full amount of any letter of credit or take action on any surety bond provided by Fast Phones as security hereunder if Fast Phones defaults on its account(s) or otherwise fails to make any payment or payments required under this Agreement in the manner and within the time, as required herein and apply the cash proceeds to any outstanding balance on Fast Phones's accounts and utilize any remaining cash proceeds as security for Fast Phones's account(s).

1.4 Payment Responsibility. Payment of all charges will be the responsibility of Fast Phones. Fast Phones shall pay invoices by utilizing wire transfer services or automatic clearing house services. Fast Phones shall make payment to AT&T for all services billed including disputed amounts. AT&T will not become involved in billing disputes that may arise between Fast Phones and Fast Phones's customer.

1.4.1 Payment Due. Payment for services provided by AT&T, including disputed charges, is due on or before the next bill date. Information required to apply payments must accompany the payment. The information must notify AT&T of Billing Account Numbers (BAN) paid; invoices paid and the amount to be applied to each BAN and invoice (Remittance Information). Payment is considered to have been made when the payment and Remittance Information are received by AT&T. If the Remittance Information is not received with payment, AT&T will be unable to apply amounts paid to Fast Phones's accounts. In such event, AT&T

shall hold such funds until the Remittance Information is received. If AT&T does not receive the Remittance Information by the payment due date for any account(s), late payment charges shall apply.

1.4.1.1 Due Dates. If the payment due date falls on a Sunday or on a holiday that is observed on a Monday, the payment due date shall be the first non-holiday day following such Sunday or holiday. If the payment due date falls on a Saturday or on a holiday which is observed on Tuesday, Wednesday, Thursday, or Friday, the payment due date shall be the last non-holiday day preceding such Saturday or holiday. If payment is not received by the payment due date, a late payment charge, as set forth in Section 1.4.1.2, below, shall apply.

1.4.1.2 Late Payment. If any portion of the payment is not received by AT&T on or before the payment due date as set forth above, or if any portion of the payment is received by AT&T in funds that are not immediately available to AT&T, then a late payment and/or interest charge shall be due to AT&T. The late payment and/or interest charge shall apply to the portion of the payment not received and shall be assessed as set forth in Section A2 of AT&T's GSST, Section B2 of the Private Line Service Tariff or Section E2 of the AT&T intrastate Access Services Tariff, or pursuant to the applicable state law as determined by AT&T. In addition to any applicable late payment and/or interest charges, Fast Phones may be charged a fee for all returned checks at the rate set forth in Section A2 of AT&T's GSST or pursuant to the applicable state law.

1.5 Discontinuing Service to Fast Phones. The procedures for discontinuing service to Fast Phones are as follows:

1.5.1 In order of severity, Suspend/Suspension, Discontinue/Discontinuance and Terminate/Termination are defined as follows for the purposes of this Attachment:

1.5.1.1 Suspend/Suspension is the temporary restriction of the billed Party's access to the ordering systems and/or access to the billed Party's ability to initiate PIC-related changes. In addition, during Suspension, pending orders may not be completed and orders for new service or changes to existing services may not be accepted.

1.5.1.2 Discontinue/Discontinuance is the denial of service by the billing Party to the billed Party that will result in the disruption and discontinuation of service to the billed Party's customers. Additionally, at the time of Discontinuance, AT&T will remove any Local Service Freezes in place on the billed Party's customers.

1.5.1.3 Terminate/Termination is the disconnection of service by the billing Party to the billed Party.

1.5.2 AT&T reserves the right to Suspend, Discontinue or Terminate service in the event of prohibited, unlawful or improper use of AT&T facilities or service, abuse of AT&T facilities, or any other violation or noncompliance by Fast Phones of the rules and regulations of AT&T's tariffs.

1.5.3 Suspension. If payment of amounts due as described herein is not received by the bill date in the month after the original bill date, or fifteen (15) days from the date of a deposit request in the case of security deposits, AT&T will provide written notice to Fast Phones that services will be Suspended if payment of such amounts, and all other amounts that become past due before Suspension, is not received by wire transfer, automatic clearing house or cashier's check in the manner set forth in Section 1.4.1 above, or in the case of a security deposit request, in the manner set forth in Section 1.3.1 above: (1) within seven (7) days following such notice for CABS billed services; (2) within fifteen (15) days following such notice for CRIS and IBS billed services; and (3) within seven (7) days following such notice for security deposit requests.

1.5.3.1 The Suspension notice shall also provide that all past due charges for CRIS and IBS billed services, and all other amounts that become past due for such services before Discontinuance, must be paid within thirty (30) days from the date of the Suspension notice to avoid Discontinuance of CRIS and IBS billed services.

1.5.3.2 For CABS billed services, AT&T will provide a Discontinuance notice that is separate from the Suspension notice, that all past due charges for CABS billed Services, and all other amounts that become past due for such services before Discontinuance, must be paid within thirty (30) days from the date of the Suspension notice to avoid Discontinuance of CABS billed services. This Discontinuance notice may be provided at the same time that AT&T provides the Suspension notice.

1.5.4 Discontinuance. If payment of amounts due as described herein is not received by the bill date in the month after the original bill date, AT&T will provide written notice that AT&T may discontinue the provision of existing services to Fast Phones if payment of such amounts, and all other amounts that become past due before Discontinuance, including requested security deposits, is not received by wire transfer, automatic clearing house or cashier's check in the manner set forth in Section 1.4.1 above or in the case of a deposit in accordance with Section 1.3.1 above, within thirty (30) days following such written notice; provided, however, that AT&T may provide written notice that such existing services may be Discontinued within fifteen (15) days following such notice, subject to the criteria described in Section 1.5.4.1 below.

1.5.4.1 AT&T may take the action to Discontinue the provision of existing service upon fifteen (15) days from the day after AT&T provides written notice of such Discontinuance if (a) such notice is sent by certified mail or overnight delivery; (b) Fast Phones has not paid all amounts due pursuant to a subject bill(s), or has not provided adequate security pursuant to a deposit request; and (c) either:

(1) AT&T has sent the subject bill(s) to Fast Phones within seven (7) business days of the bill date(s), verifiable by records maintained by AT&T:

i. in paper or CDROM form via the United States Postal Service (USPS), or
ii. in magnetic tape form via overnight delivery, or
iii. via electronic transmission; or

(2) AT&T has sent the subject bill(s) to Fast Phones, using one of the media described in (1) above, more than thirty (30) days before notice to Discontinue service has been rendered.

1.5.4.2 In the case of Discontinuance of services, all billed charges, as well as applicable disconnect charges, shall become due.

1.5.4.3 Fast Phones is solely responsible for notifying the customer of the Discontinuance of service. If, within seven (7) days after Fast Phones's services have been Discontinued, Fast Phones pays, by wire transfer, automatic clearing house or cashier's check, all past due charges, including late payment charges, outstanding security deposit request amounts if applicable and any applicable restoral charges as set forth in Section A4 of AT&T's GSST, then AT&T will reestablish service for Fast Phones.

1.5.5 Termination. If within seven (7) days after Fast Phones's service has been Discontinued and Fast Phones has failed to pay all past due charges as described above, then Fast Phones's service will be Terminated.

2. Billing Disputes

2.1 Fast Phones shall electronically submit all billing disputes to AT&T using the form specified by AT&T. In the event of a billing dispute, the Parties will endeavor to resolve the dispute within sixty (60) days of the notification date. Within five (5) business days of AT&T's denial, or partial denial, of the billing dispute, if Fast Phones is not satisfied with AT&T's resolution of the billing dispute or if no response to the billing dispute has been received by Fast Phones by such sixtieth (60th) day, Fast Phones must pursue the escalation process as outlined in the Billing Dispute Escalation Matrix, set forth on AT&T's Interconnection Services Web site, or the billing dispute shall be considered denied and closed. If, after escalation, the Parties are unable to reach resolution, then the aggrieved Party, if it elects to pursue the dispute shall pursue dispute resolution in accordance with General Terms and Conditions.

2.2 For purposes of this Section 2, a billing dispute means a reported dispute submitted pursuant to Section 2.1 above of a specific amount of money actually billed by AT&T within twelve (12) months of the submission of such dispute. Fast Phones agrees to not submit billing disputes for amounts billed more than twelve (12) months prior to submission of a billing dispute filed for amounts billed. The billing dispute must be clearly explained by Fast Phones and supported by written documentation, which clearly shows the basis for disputing charges. The

determination as to whether the billing dispute is clearly explained or clearly shows the basis for disputing charges shall be within AT&T's sole reasonable discretion. Disputes that are not clearly explained or those that do not provide complete information may be rejected by AT&T. Claims by Fast Phones for damages of any kind will not be considered a billing dispute for purposes of this Section. If AT&T resolves the billing dispute, in whole or in part, in favor of Fast Phones, any credits and interest due to Fast Phones as a result therof shall be applied to Fast Phones's account by AT&T upon resolution of the billing dispute.

3. Non-InterCompany Settlements

3.1 Direct Participants are Telecommunications carriers that exchange data directly with other Direct Participants via the Centralized Message Distribution System (CMDS) Data Center (Direct Participant) and may act as host companies (Host) for those Telecommunications carriers that do not exchange data directly via the CMDS Data Center.

3.2 The Non-InterCompany Settlements (NICS) is the national system administered by Telcordia that is used in the settlement of revenues for calls that are originated and billed by two (2) different local exchange carriers (LEC) within a single Direct Participant's territory to another for billing. NICS applies to calls involving another LEC where the Earning Company and the Billing Company are located within AT&T's Southeast Region 9-State.

3.3 In association with message distribution service, AT&T will provide Fast Phones with associated intercompany settlements reports as appropriate.

3.4 Notwithstanding anything in this Agreement to the contrary, in no case shall either Party be liable to the other for any direct or consequential damages incurred as a result of the obligations set out in this Section 3.

3.5 <u>Intercompany Settlements Messages</u>

3.5.1 Intercompany Settlements Messages facilitate the settlement of revenues associated with traffic originated from or billed by Fast Phones as a facilities based provider of local exchange Telecommunications Services.

3.5.2 AT&T will receive the monthly NICS reports from Telcordia on behalf of Fast Phones and will distribute copies of these reports to Fast Phones on a monthly basis.

3.5.3 Through NICS, AT&T will collect the revenue earned by Fast Phones within the AT&T Southeast Region 9-State from another LEC also within the AT&T Southeast Region 9-State where the messages are billed, less a per message billing and collection fee of five cents ($0.05), on behalf of Fast Phones. AT&T will remit the revenue billed by Fast Phones within the AT&T Southeast Region 9-State to the LEC also within the AT&T Southeast Region 9-State, where the

messages originated, less a per message billing and collection fee of five cents ($0.05). These two (2) amounts will be netted together by AT&T and the resulting charge or credit issued to Fast Phones via a CABS miscellaneous bill on a monthly basis in arrears.

3.5.4 AT&T and Fast Phones agree that monthly netted amounts of less than fifty dollars ($50.00) will not be settled.

Attachment 8

Rights-of-Way, Conduits and Pole Attachments

Rights-of-Way, Conduits and Pole Attachments

AT&T will provide nondiscriminatory access to any pole, duct, conduit, or right-of-way owned or controlled by AT&T pursuant to 47 U.S.C. § 224, as amended by the Act, pursuant to terms and conditions of a separate license agreement negotiated with AT&T.

Attachment 9

Service Quality Measurements

SERVICE QUALITY MEASUREMENTS

Upon a particular Commission's issuance of an order pertaining to Service Quality Measurements in a proceeding expressly applicable to all CLECs generally, AT&T shall implement in that state such Service Quality Measurements as of the date specified by the Commission. Service Quality Measurements that have been ordered in a particular state can currently be accessed via the internet at http://pmap.bellsouth.com.

Attachment 10

AT&T Disaster Recovery Plan

CONTENTS

PAGE

1.0	Purpose	2
2.0	Single Point of Contact	2
3.0	Identifying the Problem	2
3.1	Site Control	3
3.2	Environmental Concerns	4
4.0	The Emergency Control Center (ECC)	4
5.0	Recovery Procedures	5
5.1	CLEC Outage	5
5.2	AT&T Outage	5
5.2.1	Loss of Central Office	6
5.2.2	Loss of a Central Office with Serving Wire Center Functions	6
5.2.3	Loss of a Central Office with Tandem Functions	6
5.2.4	Loss of a Facility Hub	7
5.3	Combined Outage (CLEC and AT&T Equipment)	7
6.0	T1 Identification Procedures	7
7.0	Acronyms	8

1.0 PURPOSE

In the unlikely event of a disaster occurring that affects AT&T's long-term ability to deliver traffic to a CLEC, general procedures have been developed by AT&T to hasten the recovery process in accordance with the Telecommunications Service Priority (TSP) Program established by the FCC to identify and prioritize telecommunication services that support national security or emergency preparedness (NS/EP) missions. A description of the TSP Program as it may be amended from time to time is available on AT&T's Interconnection Services Web site. Since each location is different and could be affected by an assortment of potential problems, a detailed recovery plan is impractical. However, in the process of reviewing recovery activities for specific locations, some basic procedures emerge that appear to be common in most cases.

These general procedures should apply to any disaster that affects the delivery of traffic for an extended time period. Each CLEC will be given the same consideration during an outage, and service will be restored as quickly as possible.

This document will cover the basic recovery procedures that would apply to every CLEC.

2.0 SINGLE POINT OF CONTACT

When a problem is experienced, regardless of the severity, the AT&T Network Management Center (NMC) will observe traffic anomalies and begin monitoring the situation. Controls will be appropriately applied to insure the sanity of AT&T's network; and, in the event that a switch or facility node is lost, the NMC will attempt to circumvent the failure using available reroutes.

AT&T's NMC will remain in control of the restoration efforts until the problem has been identified as being a long-term outage. At that time, the NMC will contact AT&T's ECC and relinquish control of the recovery efforts. Even though the ECC may take charge of the situation, the NMC will continue to monitor the circumstances and restore traffic as soon as damaged network elements are revitalized.

The telephone number for the AT&T Network Management Center in Atlanta, as published in Telcordia's National Network Management Directory, is 404-321-2516.

3.0 IDENTIFYING THE PROBLEM

During the early stages of problem detection, the NMC will be able to tell which CLECs are affected by the catastrophe. Further analysis and/or first hand observation will determine if the disaster has affected CLEC equipment only, AT&T equipment only or a combination. The initial restoration activity will be largely determined by the equipment that is affected.

Once the nature of the disaster is determined and after verifying the cause of the problem, the NMC will initiate reroutes and/or transfers that are jointly agreed upon by the affected CLECs' Network Management Center and the AT&T NMC. The type and percentage of controls used will depend upon available network capacity. Controls necessary to stabilize the situation will be invoked and the NMC will attempt to re-establish as much traffic as possible.

For long-term outages, recovery efforts will be coordinated by the ECC. Traffic controls will continue to be applied by the NMC until facilities are re-established. As equipment is made available for service, the ECC will instruct the NMC to begin removing the controls and allow traffic to resume.

3.1 SITE CONTROL

In the total loss of building use scenario, what likely exists will be a smoking pile of rubble. This rubble will contain many components that could be dangerous. It could also contain any personnel on the premises at the time of the disaster. For these reasons, the local fire marshal with the assistance of the police will control the site until the building is no longer a threat to surrounding properties and the companies have secured the site from the general public.

During this time, the majority owner of the building should be arranging for a demolition contractor to mobilize to the site with the primary objective of reaching the cable entrance facility for a damage assessment. The results of this assessment would then dictate immediate plans for restoration, both short term and permanent.

In a less catastrophic event, i.e., the building is still standing and the cable entrance facility is usable, the situation is more complex. The site will initially be controlled by local authorities until the threat to adjacent property has diminished. Once the site is returned to the control of the companies, the following events should occur.

An initial assessment of the main building infrastructure systems (mechanical, electrical, fire and life safety, elevators, and others) will establish building needs. Once these needs are determined, the majority owner should lead the building restoration efforts. There may be situations where the site will not be totally restored within the confines of the building. The companies must individually determine their needs and jointly assess the cost of permanent restoration to determine the overall plan of action.

Multiple restoration trailers from each company will result in the need for designated space and installation order. This layout and control is required to maximize the amount of restoration equipment that can be placed at the site, and the priority of placements.

Care must be taken in this planning to ensure other restoration efforts have logistical access to the building. Major components of telephone and building equipment will need to be removed and replaced. A priority for this equipment must also be jointly established to facilitate overall site restoration. (Example: If the AC switchgear has sustained damage, this would be of the highest priority in order to regain power, lighting, and HVAC throughout the building.)

If the site will not accommodate the required restoration equipment, the companies would then need to quickly arrange with local authorities for street closures, rights of way or other possible options available.

3.2 ENVIRONMENTAL CONCERNS

In the worse case scenario, many environmental concerns must be addressed. Along with the police and fire marshal, the state environmental protection department will be on site to monitor the situation.

Items to be concerned with in a large central office building could include:

1. Emergency engine fuel supply. Damage to the standby equipment and the fuel handling equipment could have created "spill" conditions that have to be handled within state and federal regulations.

2. Asbestos-containing materials that may be spread throughout the wreckage. Asbestos could be in many components of building, electrical, mechanical, outside plant distribution, and telephone systems.

3. Lead and acid. These materials could be present in potentially large quantities depending upon the extent of damage to the power room.

4. Mercury and other regulated compounds resident in telephone equipment.

5. Other compounds produced by the fire or heat.

Once a total loss event occurs at a large site, local authorities will control immediate clean up (water placed on the wreckage by the fire department) and site access.

At some point, the companies will become involved with local authorities in the overall planning associated with site clean up and restoration. Depending on the clean up approach taken, delays in the restoration of several hours to several days may occur.

In a less severe disaster, items listed above are more defined and can be addressed individually depending on the damage.

In each case, the majority owner should coordinate building and environmental restoration as well as maintain proper planning and site control.

4.0 THE ECC

The ECC is located in the Midtown 1 Building in Atlanta, Georgia. During an emergency, the ECC staff will convene a group of pre-selected experts to inventory the damage and initiate corrective actions. These experts have regional access to AT&T's personnel and equipment and will assume control of the restoration activity anywhere in the nine-state area.

In the past, the ECC has been involved with restoration activities resulting from hurricanes, ice storms and floods. They have demonstrated their capabilities during these calamities as well as

during outages caused by human error or equipment failures. This group has an excellent record of restoring service as quickly as possible.

During a major disaster, the ECC may move emergency equipment to the affected location, direct recovery efforts of local personnel and coordinate service restoration activities with the CLECs. The ECC will attempt to restore service as quickly as possible using whatever means is available, leaving permanent solutions, such as the replacement of damaged buildings or equipment, for local personnel to administer.

Part of the ECC's responsibility, after temporary equipment is in place, is to support the NMC efforts to return service to the CLECs. Once service has been restored, the ECC will return control of the network to normal operational organizations. Any long-term changes required after service is restored will be made in an orderly fashion and will be conducted as normal activity.

5.0 RECOVERY PROCEDURES

The nature and severity of any disaster will influence the recovery procedures. One crucial factor in determining how AT&T will proceed with restoration is whether or not AT&T's equipment is incapacitated. Regardless of whose equipment is out of service, AT&T will move as quickly as possible to aid with service recovery; however, the approach that will be taken may differ depending upon the location of the problem.

5.1 CLEC OUTAGE

For a problem limited to one CLEC (or a building with multiple CLECs), AT&T has several options available for restoring service quickly. For those CLECs that have agreements with other CLECs, AT&T can immediately start directing traffic to a provisional CLEC for completion. This alternative is dependent upon AT&T having concurrence from the affected CLECs.

Whether or not the affected CLECs have requested a traffic transfer to another CLEC will not impact AT&T's resolve to re-establish traffic to the original destination as quickly as possible.

5.2 AT&T OUTAGE

Because AT&T's equipment has varying degrees of impact on the service provided to the CLECs, restoring service from damaged AT&T equipment is different. The outage will probably impact a number of Carriers simultaneously. However, the ECC will be able to initiate immediate actions to correct the problem.

A disaster involving any of AT&T's equipment locations could impact the CLECs, some more than others. A disaster at a Central Office (CO) would only impact the delivery of traffic to and from that one location, but the incident could affect many Carriers. If the CO is a Serving Wire Center (SWC), then traffic from the entire area to those Carriers served from that switch would also be impacted. If the switch functions as an Access Tandem, or there is a tandem in the building, traffic from every CO to every CLEC could be interrupted. A disaster that destroys a facility hub could disrupt various traffic flows, even though the switching equipment may be unaffected.

The NMC would be the first group to observe a problem involving AT&T's equipment. Shortly after a disaster, the NMC will begin applying controls and finding re-routes for the completion of as much traffic as possible. These reroutes may involve delivering traffic to alternate Carriers upon receiving approval from the CLECs involved. In some cases, changes in translations will be required. If the outage is caused by the destruction of equipment, then the ECC will assume control of the restoration.

5.2.1 Loss of a CO

When AT&T loses a CO, the ECC will

a) Place specialists and emergency equipment on notice;

b) Inventory the damage to determine what equipment and/or functions are lost;

c) Move containerized emergency equipment and facility equipment to the stricken area, if necessary;

d) Begin reconnecting service on a parity basis for Hospitals, Police and other emergency agencies or customers served by AT&T or CLEC in accordance with the TSP priority restoration coding scheme entered in the AT&T Maintenance database prior to the emergency.

5.2.2 Loss of a CO with SWC Functions

The loss of a CO that also serves as a SWC will be restored as described in Section 5.2.1.

5.2.3 Loss of a CO with Tandem Functions

When AT&T loses a CO building that serves as an Access Tandem and as a SWC, the ECC will

a) Place specialists and emergency equipment on notice;

b) Inventory the damage to determine what equipment and/or functions are lost;

c) Move containerized emergency equipment and facility equipment to the stricken area, if necessary;

d) Begin reconnecting service on a parity basis for Hospitals, Police and other emergency agencies or customers served by AT&T or CLEC in accordance with the TSP priority restoration coding scheme entered in the AT&T Maintenance database prior to the emergency;

e) Re-direct as much traffic as possible to the alternate access tandem (if available) for delivery to those CLECs utilizing a different location as a SWC;

f) Begin aggregating traffic to a location near the damaged building. From this location, begin re-establishing trunk groups to the CLECs for the delivery of traffic normally found on the direct trunk groups. (This aggregation point may be the alternate access tandem location or another CO on a primary facility route.)

5.2.4 Loss of a Facility Hub

In the event that AT&T loses a facility hub, the recovery process is much the same as above. Once the NMC has observed the problem and administered the appropriate controls, the ECC will assume authority for the repairs. The recovery effort will include

a) Placing specialists and emergency equipment on notice;

b) Inventorying the damage to determine what equipment and/or functions are lost;

c) Moving containerized emergency equipment to the stricken area, if necessary;

d) Reconnecting service on a parity basis for Hospitals, Police and other emergency agencies or customers served by AT&T or CLEC in accordance with the TSP priority restoration coding scheme entered in the AT&T Maintenance database prior to the emergency; and

e) If necessary, AT&T will aggregate the traffic at another location and build temporary facilities. This alternative would be viable for a location that is destroyed and building repairs are required.

5.3 COMBINED OUTAGE (CLEC AND AT&T EQUIPMENT)

In some instances, a disaster may impact AT&T's equipment as well as the CLECs'. This situation will be handled in much the same way as described in Section 5.2.3. Since AT&T and the CLECs will be utilizing temporary equipment, close coordination will be required.

6.0 T1 IDENTIFICATION PROCEDURES

During the restoration of service after a disaster, AT&T may be forced to aggregate traffic for delivery to a CLEC. During this process, T1 traffic may be consolidated onto DS3s and may become unidentifiable to the Carrier. Because resources will be limited, AT&T may be forced to "package" this traffic entirely differently than normally received by the CLECs. Therefore, a method for identifying the T1 traffic on the DS3s and providing the information to the Carriers is required.

7.0 ACRONYMS

CLEC	-	Competitive Local Exchange Carrier
CO	-	Central Office (AT&T)
DS3	-	Facility that carries 28 T1s (672 circuits)
ECC	-	Emergency Control Center (AT&T)
NMC	-	Network Management Center
SWC	-	Serving Wire Center (AT&T switch)
T1	-	Facility that carries 24 circuits
TSP	-	Telecommunications Service Priority

Hurricane Information

During a hurricane, AT&T will make every effort to keep CLECs updated on the status of our network. Information centers will be set up throughout AT&T. These centers are not intended to be used for escalations, but rather to keep the CLEC informed of network related issues, area damages and dispatch conditions, etc.

Hurricane-related information can also be found on AT&T's Interconnection Web site by clicking on the link "Relief Information" in the special alert box located on the Web page. Additionally, information concerning Mechanized Disaster Reports can also be found by clicking on the link "Click here for information concerning Disaster Recovery Reports" on the Hurricane Relief page.

AT&T Disaster Management Plan

AT&T maintenance centers have geographical and redundant communication capabilities. In the event of a disaster removing any maintenance center from service another geographical center would assume maintenance responsibilities. The contact numbers will not change and the transfer will be transparent to the CLEC.

Attachment 11

Bona Fide Request and New Business Request Process

BONA FIDE REQUEST AND NEW BUSINESS REQUEST PROCESS

1. **Bona Fide Request**

1.1 The Parties agree that Fast Phones is entitled to order any Network Element, interconnection option or service option required to be made available by FCC or Commission requirements pursuant to the Act. A Bona Fide Request (BFR) is to be used when Fast Phones makes a request of AT&T to provide a new or modified Network Element, interconnection option or other service option pursuant to the Act that was not previously provided for in this Agreement.

1.2 A BFR shall be submitted in writing by Fast Phones and shall specifically identify the requested service date, technical requirements, space requirements and/or such other specifications that clearly define the request such that AT&T has sufficient information to analyze and prepare a response. Such a request shall also include Fast Phones's designation of the request as being pursuant to the Telecommunications Act of 1996 (i.e., a BFR). The request shall be sent to Fast Phones's designated AT&T Sales contact or Local Contract Manager (LCM).

1.3 Within two (2) business days of receipt of a BFR, AT&T shall acknowledge in writing its receipt and identify a single point of contact responsible for responding to the BFR and shall request any additional information needed to process the request to the extent known at that time. Notwithstanding the foregoing, AT&T may reasonably request additional information from Fast Phones at any time during the processing of the BFR.

1.4 Within thirty (30) business days of AT&T's receipt of the BFR, if the preliminary analysis of the requested BFR is not of such complexity that it will cause AT&T to expend extraordinary resources to evaluate the BFR, AT&T shall respond to Fast Phones by providing a preliminary analysis of the new or modified Network Element or interconnection option not ordered by the FCC or Commission that is the subject of the BFR. The preliminary analysis shall either confirm that AT&T will offer access to the new or modified Network Element, interconnection option or service option or confirm that AT&T will not offer the new or modified Network Element, interconnection option or service option.

1.5 For any new or modified Network Element, interconnection option or service option not ordered by the FCC or Commission, if the preliminary analysis states that AT&T will offer the new or modified Network Element, interconnection option or service option, the preliminary analysis will include an estimate of the costs of utilizing existing resources, both personnel and systems, in the development including, but not limited to,

request parameters analysis, determination of impacted AT&T departments, determination of required resources, project management resources, etc. (Development Rate) including a general breakdown of such costs associated with the Network Element, interconnection option or service option and the date the request can be met. If the preliminary analysis states that AT&T will not offer the new or modified Network Element, interconnection option or service option, AT&T will provide an explanation of why the request is not technically feasible, does not qualify as a BFR for the new or modified Network Element, interconnection option or service option, should actually be submitted as a New Business Request (NBR) or is otherwise not required to be provided under the Act. If AT&T cannot provide the Network Element, interconnection option or service option by the requested date, AT&T shall provide an alternative proposed date together with a detailed explanation as to why AT&T is not able to meet Fast Phones's requested date.

1.6 For any new or modified Network Element, interconnection option or service option not ordered by the FCC or Commission, if AT&T determines that the preliminary analysis of the requested BFR is of such complexity that it will cause AT&T to expend extraordinary resources to evaluate the BFR, AT&T shall notify Fast Phones within ten (10) business days of AT&T's receipt of BFR that a fee will be required prior to the preliminary evaluation of the BFR. Such fee shall be limited to AT&T's extraordinary expenses directly related to the complex request that require the allocation and engagement of additional resources above the existing allocated resources used on BFR cost development which include, but are not limited to, expenditure of funds to develop feasibility studies, specific resources that are required to determine request requirements (such as operation support system analysts, technical managers, software developers), software impact analysis by specific software developers; software architecture development, hardware impact analysis by specific system analysts, etc. and the request for such fee shall be accompanied with a general breakdown of such costs. If Fast Phones accepts the complex request evaluation fee proposed by AT&T, Fast Phones shall submit such fee within thirty (30) business days of AT&T's notice that a complex request evaluation fee is required. Within thirty (30) business days of AT&T's receipt of the complex request evaluation fee, AT&T shall respond to Fast Phones by providing a preliminary analysis, consistent with Section 1.4 above.

1.7 Fast Phones may cancel a BFR at any time up until thirty (30) business days after receiving AT&T's preliminary analysis. If Fast Phones cancels the BFR within thirty (30) business days after receipt of AT&T's preliminary analysis, AT&T shall be entitled to keep any complex request evaluation fee submitted in accordance with Section 1.6 above, minus

those costs included in the fee that have not been incurred as of the date of cancellation.

1.8 Fast Phones will have thirty (30) business days from receipt of preliminary analysis to accept the preliminary analysis or cancel the BFR. If Fast Phones fails to respond within this thirty (30) business day period, the BFR will be deemed cancelled. Acceptance of the preliminary analysis must be in writing and accompanied by the estimated Development Rate for the new or modified Network Element, interconnection option or service option quoted in the preliminary analysis**.**

1.9 Notwithstanding any other provision of this Agreement, AT&T shall propose a firm price quote, including the firm Development Rate, the firm nonrecurring rate and the firm recurring rate, and a detailed implementation plan within ten (10) business days of receipt of Fast Phones's accurate BFR application for a Network Element, interconnection option or service option that is operational at the time of the request; thirty (30) business days of receipt of Fast Phones's accurate BFR application for a new or modified Network Element, interconnection option or service option ordered by the FCC or Commission; and within sixty (60) business days of receipt of Fast Phones's accurate BFR application for a new or modified Network Element, interconnection option or service option not ordered by the FCC or Commission or not operational at the time of the request. The firm nonrecurring rate will not include any of the Development Rate or the complex request evaluation fee, if required, in the calculation of this rate. Such firm price quote shall not exceed the estimate provided with the preliminary analysis by more than twenty-five percent (25%).

1.10 Fast Phones shall have thirty (30) business days from receipt of firm price quote to accept or deny the firm price quote and submit any additional Development or nonrecurring rates quoted in the firm price quote.

1.11 Unless Fast Phones agrees otherwise, all prices shall be consistent with the applicable pricing principles and provisions of the Act.

1.12 If Fast Phones believes that AT&T's firm price quote is not consistent with the requirements of the Act, either Party may seek dispute resolution in accordance with the dispute resolution provisions set forth in General Terms and Conditions.

1.13 Upon agreement to the rates, terms and conditions of a BFR, the Parties shall negotiate in good faith an amendment to this Agreement.

2 New Business Request

2.1 Fast Phones also shall be permitted to request the development of new or modified facilities or service options which may not be required by the Act. Procedures applicable to requesting the addition of such elements, services and options are specified in this Attachment. A NBR is to be used by Fast Phones to make a request of AT&T for a new or modified feature or capability of an existing product or service, a new product or service that is not deployed within the AT&T network or operations and business support systems, or a new or modified service option that was not previously included in this Agreement (Requested NBR Services) and is not required by the Act.

2.2 An NBR shall be submitted in writing by Fast Phones and shall specifically identify the requested service date, technical requirements, space requirements and/or such specifications that clearly define the request such that AT&T has sufficient information to analyze and prepare a response. The request shall be sent to Fast Phones's designated AT&T Sales contact or LCM.

2.3 Within two (2) business days of receipt of an NBR, AT&T shall acknowledge in writing its receipt and identify a single point of contact responsible for responding to the NBR and shall request any additional information needed to process the request to the extent known at that time. Notwithstanding the foregoing, AT&T may reasonably request additional information from Fast Phones at any time during the processing of the NBR.

2.4 If the preliminary analysis of the requested NBR is not of such complexity that it will cause AT&T to expend extraordinary resources to evaluate the NBR, within thirty (30) business days of its receipt of the NBR, AT&T shall respond to Fast Phones by providing a preliminary analysis of such Requested NBR Services that are the subject of the NBR. The preliminary analysis shall either confirm that AT&T will offer access to the Requested NBR Services or confirm that AT&T will not offer the Requested NBR Services.

2.5 If the preliminary analysis states that AT&T will offer the Requested NBR Services, the preliminary analysis will include an estimate of the Development Rate including a general breakdown of costs and the date the request can be met. If AT&T cannot provide the Requested NBR Service by the requested date, it shall provide an alternative proposed date together with a detailed explanation as to why AT&T is not able to meet Fast Phones's requested date.

2.6 If AT&T determines that the preliminary analysis of the requested NBR is of such complexity that it will cause AT&T to expend extraordinary resources to evaluate the NBR, AT&T shall notify Fast Phones within ten

(10) business days of AT&T's notice that a complex request evaluation fee is required prior to the evaluation of the NBR. Such fee shall be limited to AT&T's extraordinary expenses directly related to the complex request. If Fast Phones accepts the complex request evaluation fee amount proposed by AT&T, Fast Phones shall submit such complex request evaluation fee within thirty (30) business days of AT&T's notice that a complex request evaluation fee is required.

2.7 Within thirty (30) business days of AT&T's receipt of the complex request evaluation fee, AT&T shall respond to Fast Phones by providing a preliminary analysis of such Requested NBR Services.

2.8 Fast Phones may cancel an NBR at any time. If Fast Phones cancels the request more than ten (10) business days after submitting it, Fast Phones shall pay AT&T's reasonable and demonstrable costs of processing and/or implementing the NBR up to the date of cancellation in addition to any fee submitted in accordance with Section 1.6 above.

2.9 Fast Phones will have thirty (30) business days from receipt of the preliminary analysis to accept the preliminary analysis or cancel the NBR. If Fast Phones fails to respond within this thirty (30) business day period, the NBR will be deemed cancelled.

2.10 Acceptance of the preliminary analysis must be in writing and accompanied by the estimated Development Rate for the Requested NBR Services quoted in the preliminary analysis.

2.11 AT&T shall propose a firm price quote including the firm Development Rate, the firm nonrecurring rate, and the firm recurring rate, and a detailed implementation plan within ten (10) business days of receipt of Fast Phones's accurate NBR application for a Requested NBR Service that is operational at the time of the request and within sixty (60) business days of receipt of Fast Phones's accurate NBR application for the Requested NBR Services not operational at the time of the request. The firm nonrecurring rate will not include any of the Development Rate or the complex request evaluation fee, if required, in the calculation of this rate. Such firm price quote shall not exceed the estimate provided with the preliminary analysis by more than twenty-five percent (25%).

2.12 Fast Phones shall have thirty (30) business days from receipt of the firm price quote to accept or deny the firm price quote and submit any additional nonrecurring, non-refundable fees quoted in the firm price quote. If the firm price quote is less than the preliminary analysis' estimate of the Development Rate, AT&T will credit Fast Phones's account for the difference.

2.13 Upon agreement to the rates, terms and conditions of a NBR, an amendment to this Agreement, or a separate agreement, may be required and the Parties shall negotiate such agreement or amendment in good faith.