Matthew W. Gissendanner
Assistant General Counsel

matthew.gissendanner@scana.com

June 5, 2018

VIA ELECTRONIC FILING
The Honorable Jocelyn G. Boyd
Chief Clerk/Administrator
Public Service Commission of South Carolina
101 Executive Center Drive
Columbia, South Carolina 29210

RE: Renewable Power Purchase Agreement between South Carolina Electric & Gas Company and Denmark Solar, LLC
Docket No. 2018- ___ - E

Dear Ms. Boyd:

South Carolina Electric & Gas Company ("SCE&G"), in compliance with and pursuant to Public Service Commission of South Carolina ("Commission") Order Nos. 81-214 and 85-347 issued in Docket No. 80-251-E, hereby submits to the Commission for review the attached renewable Power Purchase Agreement ("Renewable PPA") between SCE&G and Denmark Solar, LLC ("Denmark Solar"). SCE&G and Denmark Solar entered into the Renewable PPA effective May 26, 2018.[1] For the reasons stated herein, SCE&G respectfully requests that the Commission accept the Renewable PPA for filing because the terms of the Renewable PPA comply with the intent of the Public Utility Regulatory Policies Act of 1978 ("PURPA") and the provisions of Commission Order Nos. 81-214 and 85-347. A summary of the key terms and provisions of the Renewable PPA is set forth below.

Denmark Solar is a South Carolina limited liability company and intends to design, construct, and operate a solar photovoltaic electric generating facility at a site in Bamberg County, South Carolina ("Denmark Solar Facility"). The Denmark Solar Facility will be classified as a qualifying facility under the rules and regulations of the Federal Energy Regulatory Commission, promulgated pursuant to the provisions of Section 210 of PURPA, 16 U.S.C. § 2601, *et seq.*

---

[1] Although the Renewable PPA was not formally executed until May 26, 2018, SCE&G and Denmark Solar reached agreement on material terms, subject to SCE&G's risk review, prior to the first billing cycle of May 2018 when the new Rate PR-2 tariff approved in Commission Order No. 2018-322(A) became effective. As such, the rates in the Renewable PPA are based on the prior Rate PR-2 tariff approved in Commission Order No. 2017-246.

ELECTRONICALLY FILED - 2018 June 5 2:20 PM - SCPSC - Docket # 2018-183-E - Page 1 of 70

The Renewable PPA is consistent with the intent of PURPA to encourage the development of qualifying facilities for cogeneration and with the principles which the Commission has established in its orders implementing PURPA. *See* Order Nos. 81-214, 85-347, and 89-56, all issued in Docket No. 80-251-E. Accordingly, the terms of the Renewable PPA are consistent with the public interest. Based on the foregoing, SCE&G respectfully requests that the Commission accept the Renewable PPA for filing and issue an order to that effect. *See* Commission Order No. 81-214 at 18-19, Section III, paragraphs 3-5 and Order No. 85-347 at 29-30, Section II, Part J, and at 35-36, Section III, paragraphs 11-12.

By copy of this letter, we are providing the South Carolina Office of Regulatory Staff ("ORS") with a copy of the Renewable PPA for its records.

Thank you for your assistance and consideration of this matter. If you have any questions, please do not hesitate to contact us at your convenience.

Very truly yours,

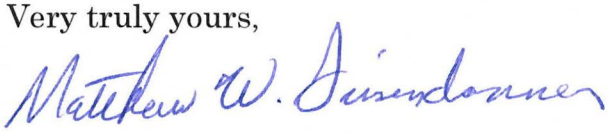

Matthew W. Gissendanner

MWG/kms
Enclosure

cc: Dawn Hipp
Jeffrey M. Nelson, Esquire
(both via electronic and U.S. First Class Mail w/enclosure)

ELECTRONICALLY FILED - 2018 June 5 2:20 PM - SCPSC - Docket # 2018-183-E - Page 2 of 70

ORIGINAL A1

EXECUTION VERSION

ELECTRONICALLY FILED - 2018 June 5 2:20 PM - SCPSC - Docket # 2018-183-E - Page 3 of 70

THIS AGREEMENT IS SUBJECT TO ARBITRATION PURSUANT TO THE FEDERAL ARBITRATION ACT, 9 U.S.C. §§ 1, *ET SEQ.*, OR ALTERNATIVELY THE SOUTH CAROLINA UNIFORM ARBITRATION ACT, S.C. CODE §§ 15-48-10, *ET SEQ.*

POWER PURCHASE AGREEMENT

This POWER PURCHASE AGREEMENT ("Agreement") is made and entered into this 24th day of May, 2018 (the "Effective Date"), by and between South Carolina Electric & Gas Company ("SCE&G" or "Buyer"), a corporation organized and existing under the laws of the State of South Carolina, and Denmark Solar, LLC ("Seller"), a South Carolina limited liability company. Seller and Buyer each may be referred to as a "Party" or collectively as the "Parties."

RECITALS

WHEREAS, Seller intends, at its sole cost and expense, to design, construct, and operate a solar photovoltaic electric generating facility (the "Facility"), with a nameplate Facility Rating of 6.0 MW-AC ("Nameplate Capacity") and anticipated first year net generation of 14,378 megawatt-hours (MWh) at the Delivery Point, located in Bamberg County, South Carolina, as described in more detail in Attachment A; and

WHEREAS, Buyer is willing to purchase and Seller is willing to sell all of the Net Energy of the Facility subject to the terms and conditions and at the prices set forth in this Agreement; and

WHEREAS, Seller has entered into, or will enter into, the separate and necessary agreements for generator interconnection and for transmission service, as required, pursuant to which Seller assumes contractual responsibility for making any and all transmission-related arrangements, including ancillary services as described in such agreements, between Seller and SCE&G Transmission for delivery of the Facility's Net Energy to Buyer; and

WHEREAS, subject to and in a manner consistent with the terms and conditions of this Agreement, the Facility is, or will be, capable of delivering Net Energy to Buyer for the Term of this Agreement; and

WHEREAS, the Facility shall be fueled by a renewable energy source, and as such, shall be capable of producing electrical products and Environmental Attributes including, but not limited to, RECs, for the Term of this Agreement.

NOW THEREFORE, the Parties, intending to be legally bound, hereby agree as follows:

ELECTRONICALLY FILED - 2018 June 5 2:20 PM - SCPSC - Docket # 2018-183-E - Page 4 of 70

ARTICLE I

DEFINITIONS

All references to Articles and Sections are to those set forth in this Agreement. Reference to any document means such document as amended from time to time and reference to either Party includes any permitted successor or assignee thereof. The following definitions and any terms otherwise defined in this Agreement shall apply for all purposes of this Agreement and all notices and communications made pursuant to this Agreement.

"AAA" shall have the meaning provided in Section 14.3(a) hereof.

"Additional Equipment" shall have the meaning provided in Section 4.3(b) hereof.

"Additional Qualifying Nameplate Capacity" shall have the meaning provided in Section 4.3(b) hereof.

"Additional Term" shall have the meaning provided in Section 3.1(a) hereof.

"Additional Term Notice" shall have the meaning provided in Section 3.1(a) hereof.

"Administrator" means a state or federal administrator, voluntary program standard-setting body, certification authority, if applicable, and any Government Agency or other body with jurisdiction over the certification or the transfer or transferability of RECs in, any particular Applicable Program.

"Affiliate" means, with respect to any Person, any other Person that, directly or indirectly, through one or more intermediaries, Controls, or is Controlled by, or is under common Control with, such Person.

"Agreement" means this contract, including all Attachments, for the purchase of Net Energy entered into between Seller and Buyer and as may be amended or modified by the Parties from time to time.

"Alternative Agreement" means an energy purchase and sale agreement between Buyer and Seller containing the same price, delivery term, and other terms and conditions as contained in this Agreement, but with modifications as may be necessary and appropriate to reflect the development status of the Facility, the dates by which actions are to be taken by the Parties, and similar matters, in each case, at the time the Alternative Agreement is entered.

"Applicable Program" means all present and future domestic, international or foreign renewable portfolio standard, renewable energy, emissions reduction or product reporting rights program, scheme or organization, adopted by a Government Agency or otherwise, or other similar program with respect to which exists a market, registry or reporting for particular Environmental Attributes. An Applicable Program includes any legislation or

ELECTRONICALLY FILED - 2018 June 5 2:20 PM - SCPSC - Docket # 2018-183-E - Page 5 of 70

regulation concerned with renewable energy, oxides of nitrogen, sulfur, or carbon, with particulate matter, soot, or mercury, or laws or regulations involving or administered by an Administrator, or under any present or future domestic, international or foreign RECs, Environmental Attributes or emissions trading program.

"ASC" means the FASB Accounting Standards Codification.

"Attachments" mean the schedules and exhibits that are appended hereto and are hereby incorporated by reference and made part of this Agreement. At the Effective Date, such Attachments include:

"Attachment A": Description of Facility

"Attachment B": Schedule of Rates

"Attachment C": Net Energy Delivery Requirements

"Attachment D": Insurance Requirements

"Attachment E": VIE Certification

"Business Day" means any day other than Saturday, Sunday or a legal public holiday as designated in Section 6103 of Title 5, U.S. Code.

"Buy Down Date" shall have the meaning provided in Section 4.3(a) hereof.

"Buy Down Payment" shall have the meaning provided in Section 4.3(a) hereof.

"Buy Down Payment Refund" shall have the meaning provided in Section 4.3(b) hereof.

"Buyer" or "SCE&G" shall have the meaning provided in the introduction, including any permitted successors and assigns.

"Buyer's Meter(s)" shall have the meaning provided in Section 7.1 hereof.

"Buyer Entities" shall have the meaning provided in Section 12.1 hereof.

"Calendar Year" means the period from January 1 through December 31.

"Cash Collateral" means any and all cash deposits made by Seller to Buyer and cash, money, funds, or other property transferred by Seller to Buyer in respect of a cash deposit or otherwise held by Buyer in any deposit account or securities account of Buyer as a cash deposit, and all of Seller's rights in any deposit account in which such deposit is made; provided that Cash Collateral shall not bear interest pursuant to this Agreement.

ELECTRONICALLY FILED - 2018 June 5 2:20 PM - SCPSC - Docket # 2018-183-E - Page 6 of 70

"Commercial Operation" means the period beginning on the Commercial Operation Date and continuing through the Term of this Agreement during which time the Facility is generating Net Energy for sale to Buyer, excluding Test Energy.

"Commercial Operation Date" means the Business Day following the Business Day on which all of the following conditions for Commercial Operation have been satisfied:

(a) All Conditions Precedent have been satisfied and all requirements under Sections 4.2 and 4.4 have been met;

(b) Seller has successfully completed the testing of the Facility that is required under the Facility's applicable Permits, manufacturers' warranties, the Interconnection Agreement and any other Project Contract, and any other prerequisite testing for the commencement of Commercial Operation, and Seller has provided documentation of such successful testing to the satisfaction of Buyer;

(c) the Facility has achieved initial synchronization with the Transmission System, and has demonstrated to Buyer's satisfaction the reliability of its communications systems and communication with Buyer;

(d) an independent professional engineer's (registered in the state of South Carolina) certification has been obtained by Seller and provided to Buyer stating that (i) the Facility has been completed in all material respects (excepting punch list items that do not materially and adversely affect the ability of the Facility to operate as intended) in accordance with this Agreement and the Interconnection Agreement, (ii) all required Interconnection Facilities have been constructed, (iii) all required interconnection tests have been completed and the Facility is physically interconnected with the Transmission System in conformance with the Interconnection Agreement and is able to deliver energy consistent with the requirements of this Agreement, (iv) the Facility is capable of operating at not less than ninety-five percent (95%) of the Nameplate Capacity without experiencing any abnormal or unsafe operating conditions or creating such conditions on the Distribution System or the Transmission System, (v) the Facility has a designed generating capability that does not exceed the Nameplate Capacity; and (vi) that the Facility is ready for Commercial Operation in accordance with the terms of this Agreement (except for the independent professional engineer's certification);

(e) all arrangements for the supply of required electric services to the Facility have been completed by Seller, are in effect, and are available for the supply of such electric services to the Facility; and

(f) Seller has submitted to Buyer a certificate of an officer of Seller familiar with the Facility stating that, to the best knowledge of such officer after due inquiry, all Permits, consents, licenses, approvals, and authorizations required to be obtained by Seller from any Government Agency to construct and to operate the Facility in compliance with applicable law and this Agreement have been obtained and are in full force and effect, and that Seller is in compliance with the terms and conditions of this Agreement and each Project Contract in all material respects.

ELECTRONICALLY FILED - 2018 June 5 2:20 PM - SCPSC - Docket # 2018-183-E - Page 7 of 70

"Commercial Operation Date Deadline" shall have the meaning provided in Section 4.4 hereof.

"Completion Date" shall have the meaning provided in Section 4.2 hereof.

"Completion Deadline" shall have the meaning provided in Section 4.2 hereof.

"Condition Precedent" refers to any condition precedent listed in Section 4.1 hereof.

"Confidential Information" shall have the meaning provided in Section 15.14 hereof.

"Confidentiality Agreement" means that certain confidentiality agreement entered into and made effective September 22, 2016, between SCE&G and Southern Current, LLC.

"Contract Quantity" shall have the meaning provided in Section 3.5 hereof.

"Contract Year" means a Calendar Year except that (i) the first Contract Year (Contract Year 1) shall commence on the Commercial Operation Date and end on December 31 of the year during which the Commercial Operation Date occurs, and (ii) if the Commercial Operation Date occurs on a date other than January 1, the last Contract Year (Contract Year 11) shall commence on January 1 of the Calendar Year immediately following Contract Year 10 and end on the day that is one day prior to the tenth (10th) anniversary of the Commercial Operation Date, unless Seller elects an Additional Term pursuant to Section 3.1(a). If the Commercial Operation Date occurs on a date other than January 1 and Seller elects an Additional Term, the last Contract Year (Contract Year 16) shall commence on January 1 of the Calendar Year immediately following Contract Year 15 and end on the day that is one day prior to the fifteenth anniversary of the Commercial Operation Date. For the avoidance of doubt, if the Commercial Operation Date occurs on January 1, the last Contract Year will be Contract Year 10, if Seller does not elect an Additional Term, and Contract Year 15, if Seller elects an Additional Term.

"Control" means the direct or indirect power, whether by contract or through the ownership of capital stock or other equity interests, to elect a majority of such other Person's board of directors or similar governing body, or to direct or cause the direction of management and policies of such Person.

"Cure Period" shall have the meaning provided in Section 11.1(i) hereof.

"Curtailed Energy" shall have the meaning provided in Section 5.1(f) hereof.

"Delay Damages" means a daily amount equal to $660.00 per day.

"Delivery Point" means the point at which the Facility is connected to the Transmission System at the high side bushing of the Seller-provided step-up transformer.

"Delivery Term Credit Support" means a form of security posted by Seller in order to secure its obligations after the Commercial Operation of the Facility in an amount equal to

$180,000.00, in the form of one or more of the following: (a) a Letter of Credit, (b) Cash Collateral, (c) a Parental Guarantee, (d) a Surety Bond, or (e) such other form of credit support mutually agreed upon by the Parties, all of which shall be subject to the terms set forth in Section 9.4.

"Demand" shall have the meaning provided in Section 14.3(b).

"Development Period Credit Support" means a form of security posted by Seller in order to secure its obligations prior to the Commercial Operation of the Facility in an amount equal to $270,000.00, in the form of one or more of the following: (a) a Letter of Credit, (b) Cash Collateral, (c) a Parental Guarantee, (d) a Surety Bond, or (e) such other form of credit support mutually agreed upon by the Parties, all of which shall be subject to the terms set forth in Section 9.3.

"Distribution System" means SCE&G's distribution system consisting of electric lines, electric plant, transformers and switchgear used for conveying electricity to ultimate consumers, but not including any part of the Transmission System.

"Early Termination Fee" means a payment in the amount of the then-present value (discounted at the prevailing prime rate of interest as published in *The Wall Street Journal* on the day preceding the date of determination) of the cash flows equal to the Buyer's purchase obligations hereunder with respect to the Net Energy for the remaining term of the Agreement. This payment shall be calculated by applying the present value discount to the product of the following: the number of days remaining in the Term of the Agreement then in effect multiplied by the product of (x) the positive difference, if any, by subtracting the Net Energy Market Price from the Net Energy Rate the Buyer would otherwise pay for such Net Energy hereunder multiplied by (y) the Average kWh Output. For purposes of calculating this payment, "Average kWh Output" means the daily average number of kWh of Net Energy actually delivered to Buyer from the Facility beginning on the start of Commercial Operation through the date of Buyer's Event of Default. If Buyer's Event of Default should occur prior to the completion of the first twelve (12) months after the start of Commercial Operation of the Facility, for purposes hereof, it shall be assumed that the "Average kWh Output" of the Facility during such partial year of Commercial Operation was the expected daily number of kWh of Net Energy, calculated by dividing 85% of the "Contract Quantity" for "Contract Year 2" as set forth by the Facility in Attachment C by 365 days. Buyer's liability for such liquidated damages shall be mitigated to the extent that Seller is able (or should reasonably be able) to enter into alternative arrangements with another power purchaser to sell its energy output to the substitute power purchaser on reasonable terms.

"Effective Date" shall have the meaning provided in the introduction.

"Emergency" means any condition or situation requiring actions or inactions that are reasonably necessary in order to (i) comply with the ERO's Reliability Standards or any other applicable regulation or law, (ii) preserve public health and safety, (iii) limit or prevent damage, or (iv) expedite restoration of service.

ELECTRONICALLY FILED - 2018 June 5 2:20 PM - SCPSC - Docket # 2018-183-E - Page 8 of 70

ELECTRONICALLY FILED - 2018 June 5 2:20 PM - SCPSC - Docket # 2018-183-E - Page 9 of 70

"Emergency Condition" means (i) any urgent, abnormal, dangerous, and/or public safety condition that is existing or is imminently likely to result in material loss or damage to the Facility, the Transmission System and/or Distribution System, disruption or generation by the Facility, disruption of service on the Transmission System and/or Distribution System, and/or endangerment to human life or public safety; and, (ii) any circumstance that requires action by the System Operator to comply with the ERO's Reliability Standards, including actions to respond to, prevent, limit, or manage material loss or damage to the Facility, the Transmission System and/or Distribution System, disruption of generation by the Facility, disruption of service on the Transmission System and/or Distribution System, and/or endangerment to human life or public safety. An Emergency Condition will be an excuse to Seller's performance only if such condition is not due to Seller's negligence, willful misconduct, and/or failure to perform as required under this Agreement and/or its Interconnection Agreement, including, without limitation, failure to perform in accordance with Good Utility Practice.

"Energy" means the amount of electrical energy (including capacity, ancillary services associated with such electrical energy and capacity, and all current and future defined characteristics that count toward resource adequacy or reserve requirements) either used or generated over a period of time, expressed in terms of kilowatt-hour (kWh) or megawatt-hour (MWh) and produced by a photovoltaic solar power plant. For purposes of this Agreement, "Energy" shall also include all electrical products produced by or related to the Facility, including spinning reserves, operating reserves, balancing energy, regulation service, ramping capability, reactive power and voltage control, frequency control and other ancillary or essential reliability service products, or any benefit Buyer otherwise would have realized from or related to the Facility if Buyer rather than Seller had constructed, owned or operated the Facility, it being the Parties' intent that all such benefits and entitlements in addition to electrical output that flow to the owner or operator of the Facility, whether existing as of the Effective Date or at any time during the Term, belong to Buyer at no additional cost to Buyer. The term Energy shall exclude Environmental Attributes and any and all state and federal production tax credits, any investment tax credits, tax incentives, or tax grants, and any other tax credits, tax incentives or tax grants which are or will be generated or earned by the Facility.

"Environmental Attributes" means all attributes (environmental or other) that are created or otherwise arise from the Facility's generation of electricity from a renewable energy source in contrast with the generation of electricity using nuclear or fossil fuels or other non-renewable resources. Forms of such attributes include, without limitation, any and all environmental air quality credits, green credits, RECs, carbon credits, emissions reduction credits, emission rate credits, certificates, tags, offsets, allowances (carbon dioxide and otherwise), solar renewable energy credits, tags, certificates or similar products or rights associated with solar as a "green" or "renewable" electric generation resource, or similar products or rights, howsoever entitled, (i) resulting from the avoidance or reduction of the emission of any gas, chemical or other substance, including but not limited to, mercury, nitrogen oxide, sulfur dioxide, carbon dioxide, carbon monoxide, particulate matter or similar pollutants or contaminants of air, water, or soil, and (ii) attributable to the generation, purchase, sale or use of Energy from or by the Facility, or otherwise attributable

ELECTRONICALLY FILED - 2018 June 5 2:20 PM - SCPSC - Docket # 2018-183-E - Page 10 of 70

to the Facility during the Term. Environmental Attributes include, without limitation, those currently existing or arising during the Term under local, state, regional, federal, or international law or regulation relevant to the avoidance of any emission described in this Agreement under any governmental, regulatory or voluntary program, including, but not limited to, the United Nations Framework Convention on Climate Change and related Kyoto Protocol or other programs, laws or regulations involving or administered by the Clean Air Markets Division of the Environmental Protection Agency or successor administrator (collectively with any local, state, regional, or federal entity given jurisdiction over a program involving transferability of Environmental Attributes). Notwithstanding the foregoing, the term Environmental Attributes shall exclude any and all state and federal production tax credits, any investment tax credits, tax incentives, or tax grants, and any other tax credits, tax incentives or tax grants which are or will be generated or earned by the Facility.

"Environmental Liability" means all loss, damage, expense, liability and other claims, including court costs and reasonable attorney fees arising out of or relating to the existence at, on, above, below or near the Facility of any Hazardous Substance.

"EPC Contract" means, individually or collectively as the context requires, engineering, procurement and construction agreements and/or balance of plant agreements for construction of the Facility to be entered into by and between Seller or its Affiliate and the applicable counterparty.

"ERO" means the North American Electric Reliability Corporation and its successor, if any.

"Event of Default" means any of the events listed in Section 11.1 hereof.

"Excusable Delay" means a delay resulting from any of the following: (a) an event of Force Majeure, (b) a delay caused solely by Buyer, or (c) any delay in the Interconnecting Utility's completion of the Interconnection Facilities by the date that is sixty (60) days prior to the Completion Deadline unless Seller directly or indirectly has caused such delay.

"Extension Payments" shall have the meaning provided in Section 4.2 hereof.

"Facility" means the ground-mounted photovoltaic solar power plant developed, constructed and operated pursuant to this Agreement and all equipment used to produce the electric energy generated at such solar power plant and being sold under this Agreement, including but not limited to, all photovoltaic solar panels, inverters, isolation transformers, buildings, and other facilities necessary to connect to the Delivery Point and produce the Net Energy being sold under this Agreement, and all equipment that is owned or controlled by Seller required for parallel operation with the Transmission System.

"Facility Premise" means the real property, as more particularly described in the Attachment A hereto, on which the Facility will be located.

"Facility Rating" means the output potential the Facility can produce under specified conditions, which is generally expressed in kW-AC or MW-AC.

ELECTRONICALLY FILED - 2018 June 5 2:20 PM - SCPSC - Docket # 2018-183-E - Page 11 of 70

"FASB" means the Financial Accounting Standards Board.

"FERC" means the Federal Energy Regulatory Commission.

"Final Installed Capacity" shall have the meaning provided in Section 4.3(a) hereof.

"Financing Party" means the Persons (including any trustee or agent on behalf of such Persons) providing financing or refinancing to or on behalf of Seller for the design, development, construction, testing, commissioning, operation or maintenance of the Facility (whether limited recourse, or with or without recourse).

"Force Majeure" shall have the meaning provided in Section 10.1 hereof.

"Good Utility Practice" means any of the practices, methods, standards and acts, (including, but not limited to, the practices, methods and acts engaged in or approved by a significant portion of owners and operators of power plants in the United States that have the technology, complexity and size similar to the Facility) that, at a particular time in the exercise of reasonable judgment in light of the facts known or that should reasonably have been known at the time a decision was made, could have been expected to accomplish the desired result and goals (including such goals as efficiency, reliability, economy and profitability) in a manner consistent with applicable facility design limits and equipment specifications and applicable laws and regulations. Good Utility Practice is not intended to be limited to the optimum practice, method, or act to the exclusion of all others, but rather to be generally accepted and consistently adhered to acceptable practices, methods or acts relevant to the activity and facts in question.

"Government Agency" means the United States of America, or any state or any political subdivision thereof, including without limitation, any municipality, township or county, and any domestic entity or body exercising executive, legislative, judicial, regulatory, administrative functions of or pertaining to government, including, without limitation, any corporation or other entity owned or controlled by any of the foregoing, any court of competent jurisdiction, or commission or governmental or regulatory authority or instrumentality or authorized arbitral body.

"Guaranteed Energy Production" shall have the meaning provided in Section 3.5 hereof.

"Hazardous Substance" means any chemical, waste, or other substance (i) which now or hereafter becomes defined as or included in the definition of "hazardous substances," "hazardous wastes," "hazardous materials," "extremely hazardous wastes," "restricted hazardous wastes," "toxic substances," "toxic pollutants," "pollution," "pollutants," "regulated substances," or words of similar import under any laws pertaining to environmental health, safety or welfare, (ii) which is declared to be hazardous, toxic, or polluting by any Government Agency, (iii) exposure to which is now or hereafter prohibited, limited or regulated by any Government Agency, (iv) the storage, use, handling, disposal or release of which is restricted or regulated by any Government Agency, or (v) for which remediation or cleanup is required by any Government Agency.

"Indemnified Party" shall have the meaning provided in Section 12.1 hereof.

"Indemnifying Party" shall have the meaning provided in Section 12.1 hereof.

"Initial Term" shall have the meaning provided in Section 3.1(a) hereof.

"Interconnecting Utility" means that utility (which in this case shall be SCE&G) providing interconnection service for the Facility to the Transmission System or Distribution System of that utility.

"Interconnection Agreement" means an agreement between the Interconnecting Utility and the Seller providing interconnection service for the Facility to the Transmission System or Distribution System of the Interconnecting Utility, as the same may be amended from time to time.

"Interconnection Condition" means that Seller has entered into and executed the Interconnection Agreement for the intended capacity of the Facility.

"Interconnection Facilities" means all facilities and equipment between the Facility and the Delivery Point, including any modification, additions or upgrades that are necessary to physically and electrically interconnect the Facility to the Transmission System or Distribution System.

"Interest Rate" shall have the meaning given to it in Section 8.1(d).

"Letter(s) of Credit" means one or more irrevocable, standby letters of credit issued by a U.S. commercial bank or a foreign bank with a U.S. branch with such bank having assets on its most recent audited balance sheet of at least Ten Billion Dollars ($10,000,000,000) and a credit rating assigned to its senior long-term unsecured debt obligations of at least A- from Standard & Poor's Ratings Services or A3 from Moody's Investors Service, in a form approved by Buyer.

"Maintenance Outage" means the temporary operational removal of the Facility from service to perform work on specific components of the Facility, at a time when the Facility must be removed from service before the next Scheduled Outage in the interest of safety or the prevention of injury or damage to or undue wear and tear on the Facility or any component thereof.

"Major Equipment" means all solar photovoltaic modules, trackers and inverters required for the Facility to achieve Commercial Operation by the Commercial Operation Date Deadline.

"Milestone" shall have the meaning given to it in Section 5.3(c).

"Nameplate Capacity" shall have the meaning set forth in the recitals.

ELECTRONICALLY FILED - 2018 June 5 2:20 PM - SCPSC - Docket # 2018-183-E - Page 12 of 70

"Net Energy" means, for the period being considered, the actual total amount of Energy generated by the Facility less any Energy generated by the Facility that is consumed for the operation of the Facility and less any losses up to the Delivery Point, as measured according to the metering provisions in Article VII.

"Net Energy Market Price" shall mean the market price for the Net Energy to be produced and generated by the Facility and sold hereunder during the applicable time period considered as determined in a commercially reasonable manner based upon the average of two price quotes from brokerage firms reasonably selected, one by Buyer and one by Seller, each not affiliated with either Party. In each case, such market price shall be determined in a commercially reasonable manner under then current market conditions with respect to an assumed agreement for the purchase of the Net Energy that Seller is obligated to provide hereunder as of the time the Termination Date is declared. Factors used in determining such market price may include a comparison of comparable transactions, third party quotations from leading dealers in energy contracts, forward price curves based on economic analysis of the relevant markets, settlement prices for comparable transactions at liquid trading hubs (e.g., NYMEX), the remaining Term and the Seller's current discount rates. Each broker will be required to provide reasonable detail in writing as to its determination of its price quotation.

"Net Energy Rate" has the meaning assigned to it in Attachment B.

"Notice of Completion" shall have the meaning provided in Section 4.2 hereof.

"Notice of Interest" shall have the meaning provided in Section 3.8 hereof.

"Offer Notice" shall have the meaning provided in Section 3.8 hereof.

"Parental Guarantee" means a guarantee from a satisfactory parent guarantor of Seller that is acceptable to Buyer and meets all the requirements in Article IX as if it were Seller. The Parental Guarantee shall be in form and substance satisfactory to Buyer in its discretion.

"Party" and "Parties" shall have the meanings assigned to it in the Preamble.

"Performance Assurance" means the Development Period Credit Support and Delivery Term Credit Support, as applicable.

"Performance Liquidated Damages" has the meaning set forth in Section 3.5 hereof.

"Permit" means all state, federal and local authorizations, certificates, permits, licenses and approvals required by any Government Agency for the construction, operation and maintenance of the Facility.

"Person" means an individual, partnership, corporation, association, joint stock company, trust, joint venture, unincorporated organization, or Government Agency (or any department, agency, or political subdivision thereof).

ELECTRONICALLY FILED - 2018 June 5 2:20 PM - SCPSC - Docket # 2018-183-E - Page 13 of 70

"Primary Beneficiary" has the meaning set forth in ASC Topic 810, Consolidation, as issued and modified from time to time by FASB.

"Project Contracts" means this Agreement, the EPC Contract, the Interconnection Agreement, and the operation and maintenance agreement.

"Public Service Commission of South Carolina" or "SCPSC" shall mean the Public Service Commission of South Carolina or any successor state agency vested with the power and jurisdiction to supervise and regulate the rates and service of South Carolina Electric & Gas Company or its successor.

"PURPA" means the Public Utility Regulatory Policies Act of 1978.

"Qualifying Facility" or "QF" means a cogenerator, small power producer, or non-utility generator that has been certified by or self-certified with the FERC as meeting certain ownership, operating and efficiency criteria established by the FERC pursuant to the PURPA, the criteria for which are currently set forth in 18 C.F.R. § 292, et seq. (2006), Section 210 of PURPA, 16 U.S.C. § 824a-3 (2005), 16 U.S.C. 796, et seq. (2006), and Section 1253 of EPAct 2005, Pub. L. No. 109-58, § 1253, 119 Stat. 594 (2005) or, alternatively, analogous provisions under the laws of the State of South Carolina.

"Regulatory Event" shall have the meaning provided in Section 15.21 hereof.

"Reliability Standards" mean the reliability standards of the ERO.

"Renewable Energy Certificate" or "REC" means a certificate, credit, allowance, green tag, or other transferable indicia, howsoever entitled representing generation of one (1) megawatt hour of energy (or another particular quantity of energy as may be specified by an Applicable Program) generated by the Facility in tandem with the Net Energy produced by the Facility. A REC shall represent all title to and claim over all of the Environmental Attributes and product reporting rights associated with the electrical energy generated by a Facility.

"Renewable Energy Resource" means the generation source for the production of Energy and RECs, in this case, a solar energy resource.

"Representatives" shall have the meaning provided in Section 15.14 hereof.

"Requirements of Law" means any federal, state, and local law, statute, regulation, rule, code, ordinance, resolution, order, writ, judgment, decree or Permit enacted, adopted, issued or promulgated by any Government Agency, including, without limitation, (i) those pertaining to the creation and delivery of the Net Energy, (ii) those pertaining to electrical, building, zoning, occupational safety, health requirements or to pollution or protection of the environment, and (iii) principles of common law under which a person may be held liable for the release or discharge of any hazardous substance into the environment or any other environmental damage.

ELECTRONICALLY FILED - 2018 June 5 2:20 PM - SCPSC - Docket # 2018-183-E - Page 14 of 70

"Scheduled Outage" shall have the meaning provided in Section 6.1 hereof.

"SCE&G Transmission" means the Electric Transmission Department of SCE&G.

"SCE&G's Open Access Transmission Tariff" or "OATT" means the OATT of SCE&G on file with the FERC.

"Seller" shall have the meaning provided in the introduction, including any permitted successors and assigns.

"Seller Entities" shall have the meaning provided in Section 12.1 hereof.

"Shortfall" shall have the meaning provided in Section 3.5 hereof.

"Surety Bond" means a bond that is issued by a surety or insurance company that promises to pay a specified amount to Buyer upon certain events, which include, but are not limited to, when the Seller fails to meet its obligations under this Agreement. The surety or insurance company should have an A.M. Best Financial Strength Rating (FSR) equal to or better than B+ or an equivalent Standard & Poor's Ratings Services or Moody's Investors Service rating (A- or A3) and be otherwise credit qualified by, and acceptable to, the SCANA Corporate Credit Department. The bond must be in a form approved by Buyer in its discretion.

"System Operator" means the operators of the Transmission System and/or Distribution System that have the responsibilities for ensuring that the Transmission System and/or Distribution System as a whole operates safely and reliably, including without limitation, the responsibilities to balance generation supply with customer load and provide dispatch and curtailment instructions to generators supplying energy to the Transmission System and/or Distribution System, and includes any person or entity delivering any such instruction to Seller.

"System Operator Instruction" means any order, action, requirement, demand, or direction from the System Operator using Good Utility Practice delivered to Seller in a non-discriminatory manner to operate, manage, and/or otherwise maintain safe and reliable operations of the Transmission System and/or Distribution System, including, without limitation, those undertaken and implemented by the System Operator, but in its sole discretion based on relevant Transmission System and/or Distribution System factors and considerations (including any and all operating characteristics, maintenance requirements, operational limitations, reliability (including, without limitation, standing ERO regulations), safety, dispatch, constraints, discharge, emissions limitations, compliance requirements, communications, resource ramp-up and ramp-down constraints and implementation, and any other Transmission System and/or Distribution System considerations), which by way of example, if meeting the criteria above, may include, without limitation, an order or action to: (i) interconnect, disconnect, integrate, operate in parallel, or synchronize with the Transmission System and/or Distribution System, as applicable, (ii) increase (based on generator characteristics and Good Utility Practice), reduce or cease generation output to comply with standing ERO regulations; (iii) perform or cease performing any activity so as

ELECTRONICALLY FILED - 2018 June 5 2:20 PM - SCPSC - Docket # 2018-183-E - Page 15 of 70

to operate in accordance with Transmission System and/or Distribution System limitations, including, without limitation, operational constraints that would require the System Operator to force offline or reduce generation output from reliability must-run generation to accommodate generation by the Facility; and, (iv) suspend or interrupt any operational activity for an Emergency Condition or Force Majeure event; provided, however, a System Operator instruction in response to an Emergency Condition or Force Majeure event relating specifically to the Facility shall be deemed to be non-discriminatory.

"Term" shall mean, subject to the terms hereunder, the Initial Term and, if and when properly elected by Seller pursuant to Section 3.1(a) hereof, the Additional Term.

"Termination Date" shall mean the effective date of any termination of this Agreement pursuant to its terms.

"Termination Notice" shall have the meaning provided in Section 11.2(a) hereof.

"Termination Payment" shall mean (i) when Buyer is the paying Party, the Early Termination Fee and those other payments set forth in Section 11.5, and (ii) when Seller is the paying Party, the formula for the Termination Payment set forth in Section 11.3 or 11.4 hereof, as applicable.

"Test Energy" means any Net Energy generated by the Facility and delivered to the Delivery Point prior to the Commercial Operation Date of the Facility.

"Test Energy Rate" has the meaning assigned to it in Attachment B.

"Tracking System" means the system that accounts for the generation, sale, purchase, and/or retirement of RECs, and any other tracking system applicable to an Applicable Program as the context requires.

"Transmission System" means SCE&G's system of electric lines comprised wholly or substantially of high voltage lines, associated system protection, system stabilization, voltage transformation, and capacitance, reactance and other electric plant used for conveying electricity from a generating station to a substation, from one generating station to another, from one substation to another, or to or from the Delivery Point or to ultimate consumers and shall include any interconnection owned by SCE&G, but shall in no event include any lines that SCE&G has specified to be part of the Distribution System except for any distribution facilities required to accept Net Energy from the Facility.

"Variable Integration Costs" shall have the meaning given to it in Section 5.2(b).

"Variable Interest," "Variable Interest Entity," or "VI" or "VIE" shall have the meaning set forth in ASC Topic 810, Consolidation, as issued and modified from time to time by FASB.

ELECTRONICALLY FILED - 2018 June 5 2:20 PM - SCPSC - Docket # 2018-183-E - Page 16 of 70

ELECTRONICALLY FILED - 2018 June 5 2:20 PM - SCPSC - Docket # 2018-183-E - Page 17 of 70

ARTICLE II

FACILITY DESCRIPTION AND QUALIFYING FACILITY STATUS

2.1 Facility Description and Generation Capabilities. A detailed description of the Facility, including, inter alia, its location, technology, solar power plant size, and net output (MW), is set forth in Attachment A. A scaled map and drawings that identify the Facility Premises, the location of the Facility on the Facility Premises, the location of the Delivery Point and the location of all meters and related measuring equipment, monitoring system, and other important ancillary facilities and Interconnection Facilities are included in Attachment A. Attachment A will be revised and supplemented as Facility engineering and design drawings and specifications are finalized.

2.2 Facility Specifications. Seller, at its sole expense, will design, construct, maintain, provide security for, operate and repair the Facility (a) according to Good Utility Practice; and (b) to meet the requirements of this Agreement, including but not limited to the Nameplate Capacity and those other specifications listed on Attachment A. Seller shall not expand the Nameplate Capacity of the Facility without Buyer's consent.

2.3 Maintenance of Facility's Status. Seller shall use only solar photovoltaic as the source of energy for the Net Energy sold to Buyer hereunder, and shall maintain the status of the Facility as a Qualifying Facility throughout the Term of this Agreement. Seller shall at all times keep Buyer informed of any material changes in its business that affects its status as a Qualifying Facility. Buyer shall have the right, upon reasonable notice of not less than twenty-four (24) hours (and immediately, subject to the terms below, in the case of an Emergency), to read meters, to inspect the Facility and to examine any books, records, or other documents and take any other actions reasonably deemed necessary to perform and/or verify compliance under this Agreement. In the event of an Emergency impacting Buyer's system that occurs at or near the Facility, Buyer shall make reasonable efforts to notify the Seller and make arrangements for an emergency inspection. On or before March 31 of each year during the Term of this Agreement, Seller shall provide Buyer a certificate signed by an officer of Seller certifying that the Facility has continuously maintained its status as a Qualifying Facility during the prior Calendar Year.

ARTICLE III

TERM, PURCHASE AND SALE, ENVIRONMENTAL ATTRIBUTES

3.1 Term.

(a) The initial term of this Agreement shall commence on the Effective Date and shall continue unless otherwise terminated in accordance with its terms until the end of the tenth (10th) Contract Year (if the Commercial Operation Date occurs on January 1) or the eleventh (11th) Contract Year (if the Commercial Operation Date occurs on a date other than January 1) (the "Initial Term"). Seller may extend the Agreement for an additional term of five years beginning on the day following the end of the Initial Term and continuing until the end of the

fifteenth (15th) Contract Year (if the Commercial Operation Date occurs on January 1) or the sixteenth (16th) Contract Year (if the Commercial Operation Date occurs on a date other than January 1) ("Additional Term") by providing written notice of such extension to Buyer no more than twenty-four (24) months prior to and no less than 18 months prior to the end of the Initial Term ("Additional Term Notice"), provided that Buyer has an existing PURPA obligation consistent with the structure of this Agreement at the time Seller provides the Additional Term Notice to the Buyer. Buyer's obligation to purchase and Seller's obligation to sell the Net Energy created by the Facility as set forth herein shall be effective when the Facility generates Test Energy.

(b) Notwithstanding the foregoing and the other termination rights set forth in this Agreement, Seller may terminate this Agreement prior to the Commercial Operation Date in the event that Seller is unable to obtain financing for the Facility on terms and conditions reasonably satisfactory to it; provided, that Seller's right to terminate the Agreement pursuant to this Section 3.1(b) shall expire on the date that is twelve (12) months prior to the current Commercial Operation Date Deadline (based on the current Completion Deadline) if no termination notice has been given by Seller prior to such date. For purposes of this Section 3.1(b), the Commercial Operation Date Deadline (and the Termination Date calculated in this Section) shall be adjusted, pursuant to Section 4.6, for any notification from Seller to Buyer of the expectation to achieve Commercial Operation on a date that is earlier than the Commercial Operation Date Deadline.

3.2 Purchase and Sale.

(a) Buyer agrees to purchase the entire Net Energy of the Facility during the Term and to accept delivery of the Net Energy at the Delivery Point during the Term, subject to the terms of this Agreement. Seller agrees to sell to Buyer the entire Net Energy of the Facility during the Term and acknowledges that Buyer is entitled to receive all Net Energy from the Facility during the Term, except as otherwise provided in this Section 3.2. During any ongoing Event of Default by Buyer, Seller may sell the Net Energy to any third party. Title to and risk of loss for the Net Energy shall transfer from Seller to Buyer at the Delivery Point. Seller warrants that it will deliver to Buyer the Net Energy at the Delivery Point, free and clear of all liens, security interests, claims and encumbrances or any interest therein or thereto by any Person.

(b) Seller will not commence initial delivery of Net Energy to the Delivery Point without the prior written consent of Buyer. Buyer will purchase Test Energy produced by Seller during Facility testing and start-up at such times and under conditions acceptable to Buyer and Seller and otherwise in accordance with the terms of this Agreement. Representatives of Buyer will have the right to be present during any such testing. Buyer will cooperate with Seller to facilitate Seller's testing of the Facility necessary to achieve Commercial Operation, including coordination of the production and delivery of Test Energy. Seller will provide Buyer not less than ten (10) Business Days' written notice before any testing to establish the Facility's Commercial Operation under this Agreement.

ELECTRONICALLY FILED - 2018 June 5 2:20 PM - SCPSC - Docket # 2018-183-E - Page 18 of 70

3.3 Net Energy Rate; Test Energy Rate. Buyer shall pay Seller for the Net Energy delivered to Buyer at the Net Energy Rate for the applicable period in which service is provided as set forth in Attachment B. Buyer shall purchase all Test Energy produced by the Facility during startup and testing at the Test Energy Rate. Seller and Buyer agree that the Net Energy Rate or Test Energy Rate, as applicable, is intended to compensate Seller for all of the Net Energy of the Facility delivered to Buyer.

3.4 Generator Interconnection and Transmission Service. Seller shall enter into the necessary agreements for generator interconnection, as required, with SCE&G Transmission, and Buyer shall make any transmission-related arrangements for delivery of the Facility's Net Energy from the Delivery Point. Seller is responsible for any transmission losses that occur prior to the Delivery Point.

3.5 Contract Quantity and Guaranteed Energy Production. Seller has estimated that following the Commercial Operation Date, the Facility will deliver an annual expected performance output of Net Energy for each year of the Term as set forth in Attachment C (the "Contract Quantity"); provided that the Contract Quantity for Net Energy for the applicable period shall be reduced to the extent any of the following occur: (a) Interconnecting Utility outages (unless caused by Seller's action or inaction), (b) Buyer's inability to accept Net Energy (including Curtailed Energy as described in Section 5.1(f)), unless caused by Seller's action or inaction, (c) any directive of SCE&G Transmission, and (d) events of Force Majeure. If, starting with the second Contract Year, the Facility fails to deliver eighty-five percent (85%) of the Contract Quantity (as adjusted, and regarding Net Energy) in any particular Contract Year (the "Guaranteed Energy Production"), then a shortfall of Net Energy with respect to such Contract Year equal to the difference between the Guaranteed Energy Production and the Net Energy actually delivered (a "Shortfall") shall be deemed to exist, and Seller shall pay to Buyer in respect of such Shortfall an amount equal to fifty percent (50%) of the applicable Summer Months On-Peak Hours Energy Rate in $/kWh specified in Attachment B for that Contract Year multiplied by the amount of the Shortfall in kWh ("Performance Liquidated Damages"), which Performance Liquidated Damages shall be paid on the monthly payment date immediately succeeding the Contract Year for which Seller's obligation to pay such amounts arose or within 30 (thirty) days of delivery of an invoice from Buyer to Seller if the Shortfall occurred in the final Contract Year. Seller may adjust the quantities in Attachment C to quantities mutually agreed upon by the Parties based on final equipment selection. Seller must provide Notice to Buyer of such proposed adjustments to the quantities in Attachment C no less than six (6) months prior to the current Commercial Operation Date Deadline (based on the current Completion Deadline). To the extent that the Parties do not agree on the proposed adjustments to the quantities in Attachment C, the original agreed upon quantities shall remain in Attachment C. Within two (2) Business Days following the Commercial Operation Date, Seller shall provide Buyer with the pro-rated quantities, subject to mutual agreement of the Parties, for Contract Year 1 and Contract Year 11 in Attachment C. Such pro-rated quantities shall be based, for Contract Year 1, on the Contract Quantity for Contract Year 2, and for Contract Year 11, on the Contract Quantity for Contract Year 10. Within two (2) Business Days following the Commercial Operation Date, Seller shall also provide Buyer with the Contract Quantities for the potential Additional Term, including pro-rated quantities, subject to mutual agreement of the Parties, for the

ELECTRONICALLY FILED - 2018 June 5 2:20 PM - SCPSC - Docket # 2018-183-E - Page 19 of 70

ELECTRONICALLY FILED - 2018 June 5 2:20 PM - SCPSC - Docket # 2018-183-E - Page 20 of 70

Additional Term's portion of Contract Year 11 and for Contract Year 16 in Attachment C. Such pro-rated quantities shall be based, for the Additional Term's portion of Contract Year 11, on the Contract Quantity for Contract Year 10, and for Contract Year 16, on the Contract Quantity for Contract Year 15.

3.6 Facility Accreditation. Seller agrees to cooperate with Buyer in taking such reasonable actions at Seller's costs as are necessary for Buyer to obtain accreditation of the Facility to the maximum extent practicable, in order to permit Buyer to (a) count such Facility in connection with satisfying applicable resource adequacy requirements, and (b) designate this Agreement as a designated network resource under the terms of SCE&G's Open Access Transmission Tariff.

3.7 Environmental Attributes and Federal Tax Incentives. Seller shall retain any and all state and federal production tax credits, any investment tax credits, tax incentives, or tax grants, and any other tax credits, tax incentives or tax grants which are or will be generated by the Facility.

3.8 Purchase of Environmental Attributes.

(a) In the event that, during the Term, Seller desires to enter into a contract to sell, transfer or assign any or all Environmental Attributes (including, but not limited to, RECs) generated by the Facility, Seller shall first, prior to entering into any discussions with other parties, provide written notice to Buyer of its desire to sell the Environmental Attributes to Buyer at the purchase price and on the terms and conditions contained therein (the "Offer Notice"). Within fifteen (15) days after the Offer Notice is given, Buyer shall provide written notice to Seller if it is interested in acquiring the Environmental Attributes at the purchase price and on the terms provided in the Offer Notice (a "Notice of Interest"). If Buyer delivers such notice, the Parties agree to engage for a period of thirty (30) days thereafter in exclusive good faith negotiations to reach agreement with respect to such a transaction for the sale of the Environmental Attributes. If during this period the Parties execute a letter of intent, or other document similarly confirming the Parties' intent to enter into a transaction for the purchase and sale of the Environmental Attributes, then such exclusive negotiation period shall be automatically extended for an additional sixty (60) day period, during which time the Parties may execute a purchase and sale agreement for the Environmental Attributes. Seller may pursue any transaction for the sale, transfer, assignment of the Environmental Attributes with one or more third parties at any time and from time to time at the same or higher purchase price and on terms and conditions no less favorable to Seller than those stated in the Offer Notice (with no further obligation to offer the same to Buyer) following an occurrence of any of the following: (i) Buyer expressly declines interest in acquiring the Environmental Attributes after receipt of Seller's Offer Notice; (ii) Buyer fails to respond to the Offer Notice within fifteen (15) days after receipt thereof; (iii) Seller and Buyer fail to execute a letter of intent or other similar document with respect to the sale of the Environmental Attributes within thirty (30) days after Seller's receipt of the Notice of Interest from Buyer; or (iv) Seller and Buyer fail to execute a purchase and sale agreement for the Environmental Attributes within ninety (90) days, or later, after Seller's receipt of a Notice of Interest from Buyer. Notwithstanding the foregoing, if the Seller (a) does not

consummate a proposed transfer of the Environmental Attributes to one or more third parties within one hundred twenty (120) days after first providing Buyer with an Offer Notice, and after such period still desires to sell, transfer, or assign the Environmental Attributes, then it must again offer to sell, transfer, or assign the Environmental Attributes to Buyer pursuant to the terms of this Section 3.8(a); or (b) wishes to sell, transfer, or assign the Environmental Attributes to any third party at a lower price or on terms and conditions less favorable to Seller from those in the Offer Notice, then before doing so, it must first offer to sell, transfer, or assign the Environmental Attributes to the Buyer at the same purchase price and terms and conditions pursuant to the terms of this Section 3.8(a).

(b) In the event that Buyer and Seller reach agreement on the terms and conditions for the purchase and sale of Environmental Attributes associated with the Facility, such terms and conditions shall be memorialized by entering into a separate purchase and sale agreement for such Environmental Attributes.

ARTICLE IV

CONDITIONS PRECEDENT

4.1 Conditions Precedent. Prior to Buyer's obligation to accept Test Energy and Net Energy, Seller shall satisfy the following Conditions Precedent:

(a) Seller shall have obtained all necessary Permits;

(b) Seller shall have entered into the Project Contracts in a form and substance satisfactory to Buyer in its reasonable discretion;

(c) Seller shall have successfully completed all pre-operational testing and commissioning in accordance with manufacturer guidelines;

(d) Seller shall have obtained insurance policies or coverage in compliance with Article IX;

(e) By Seller's efforts, the Facility shall have been certified by or self-certified with the FERC as a Qualifying Facility; and

(f) Seller shall have satisfied the Interconnection Condition.

4.2 Reasonable Efforts, Notice of Completion, Extension. Seller shall use commercially reasonable efforts to satisfy each Condition Precedent set forth in Section 4.1. Within five (5) Business Days of satisfaction (or waiver in writing) of each Condition Precedent set forth in Section 4.1, Seller shall deliver to Buyer a written acknowledgment that such Condition Precedent is satisfied, the date of such satisfaction, and accompanying documentation to reasonably demonstrate the achievement of such Condition Precedent. Upon satisfaction of all Conditions Precedent set forth in Section 4.1, Seller shall provide a written acknowledgement to Buyer ("Notice of Completion") stating and affirming that (i) the Facility is constructed in accordance with the terms and conditions of this Agreement and is

ELECTRONICALLY FILED - 2018 June 5 2:20 PM - SCPSC - Docket # 2018-183-E - Page 21 of 70

ELECTRONICALLY FILED - 2018 June 5 2:20 PM - SCPSC - Docket # 2018-183-E - Page 22 of 70

ready to deliver Test Energy and Net Energy as provided in the Agreement; (ii) all Interconnection Facilities have been constructed in accordance with the terms and conditions of this Agreement and the Interconnection Agreement and are available to receive Test Energy and Net Energy from the Facility; and (iii) all Conditions Precedent set forth in Section 4.1 have been satisfied. Seller shall satisfy all Conditions Precedent and provide a Notice of Completion to Buyer (the "Completion Date") by no later than the date that is twenty-four (24) months following the Effective Date ("Completion Deadline"). Notwithstanding anything else herein to the contrary, the Completion Deadline may be extended as follows: (1) on a day-for-day basis for up to one hundred twenty (120) days, in the aggregate, for any and all Excusable Delays, provided that an Excusable Delay due to a Force Majeure event shall be governed by the terms of Article X below, and (2) in addition to any extensions for Excusable Delays, for up to one hundred twenty (120) days by Seller if (A), the Completion Deadline, as requested to be extended by Seller, can reasonably be satisfied within the extension time requested by Seller; (B), Seller has been making diligent efforts to meet the original Completion Deadline and continues to consistently make diligent efforts throughout the extended period to achieve the extended Completion Deadline; and (C), prior to such extension, Seller pays to Buyer, as liquidated damages, a sum in the amount of $660.00 per day multiplied by the extension of time requested by Seller ("Extension Payments"); provided, however, that if the Completion Date occurs prior to the end of such requested extension period, Buyer will credit Seller the amount of liquidated damages paid on a prorated basis for each day that the Completion Date occurs prior to the end of the requested extension period. In the event that Seller (x) cannot timely satisfy any Milestone, (y) cannot timely satisfy any Condition Precedent and does not or cannot pursue an extension, or (z) cannot timely satisfy any Condition Precedent within the extension granted, thus, in either case, failing to meet the Completion Deadline, then in addition to any payments owed by Seller to Buyer under this Section 4.2, Buyer shall be entitled to liquidated damages in the amount of $270,000.00 upon termination of this Agreement in accordance with Sections 11.2 and 11.3.

4.3 Seller Buy Down.

(a) If Commercial Operation is achieved based on a Facility Rating which is below the Nameplate Capacity, and the Facility has not achieved Commercial Operation with respect to a Facility Rating of not less than the Nameplate Capacity by the date that is one hundred eighty (180) Days after the Commercial Operation Date (the "Buy Down Date"), Seller shall notify Buyer in writing within three (3) Business Days of the Buy Down Date, that the Guaranteed Energy Production requirement will be reduced to reflect the Facility Rating of the Facility which has achieved Commercial Operation as of the Buy Down Date (the "Final Installed Capacity"). In such event and within seven (7) Business Days of the Buy Down Date, Seller shall pay to Buyer liquidated damages (the "Buy Down Payment") in an amount equal to (i) the Nameplate Capacity, *minus* the **Final Installed Capacity in MW-AC, *multiplied* by (ii) Three Hundred Thousand dollars ($300,000). Upon Seller's payment of the Buy Down Payment, the Contract Quantities and Guaranteed Energy Production requirements for each Contract Year shall be reduced pro rata based upon the Final Installed Capacity as of the Buy Down Date. If the Buy Down Payment is not received from Seller within seven (7) Business**

ELECTRONICALLY FILED - 2018 June 5 2:20 PM - SCPSC - Docket # 2018-183-E - Page 23 of 70

Days of the Buy Down Date, the Contract Quantities and Guaranteed Energy Production requirement for each Contract Year shall not be reduced.

(b) If, at any time within two (2) years of the date that Seller pays the Buy Down Payment to Buyer, Seller commences or recommences the construction, installation, commissioning or operation of additional equipment at the Facility so that the Facility's capacity would be in excess of the Final Installed Capacity (the "Additional Equipment"), then Seller shall provide written notice of such event to Buyer. For a period of thirty (30) Days following Buyer's receipt of such notice, Buyer shall be entitled to exercise an option to pay to Seller an amount (the "Buy Down Payment Refund") equal to (a) the product of (i) Three Hundred Thousand dollars ($300,000) and (ii) the aggregate capacity in MW-AC added to the Facility beyond the Final Installed Capacity as a result of such Additional Equipment which would not cause the total capacity of the Facility to exceed 6.0 MW-AC (the "Additional Qualifying Nameplate Capacity") *multiplied* by (b) a fraction, the numerator of which is (i) one hundred fourteen (114) *minus* (ii) the number of months (calculated to the second decimal place) that have elapsed from the date that the Buyer received the Buy Down Payment until the date that payment of the Buy Down Payment Refund is made to Seller, and the denominator of which is one hundred fourteen (114). Upon Buyer's payment of the Buy Down Payment Refund, the Contract Quantities and Guaranteed Energy Production requirements for each Contract Year shall be increased pro rata based upon the Additional Qualifying Nameplate Capacity. If Buyer exercises such option, the Additional Qualifying Nameplate Capacity shall thereafter be included in the Final Installed Capacity and the definition of "Facility" for all purposes of this Agreement and Seller shall sell, and Buyer shall purchase, all the Net Energy generated or associated with such Additional Qualifying Nameplate Capacity in accordance with the terms of this Agreement. If Buyer fails to exercise such option timely and pay the Buy Down Payment Refund to Seller, then Seller shall, as its exclusive remedy, be entitled to sell the output of all the Net Energy delivered from such Additional Equipment to any Person free of any claims by Buyer, provided that such Additional Equipment is separately metered from the Major Equipment that was initially installed as part of the Facility as of the Buy Down Date.

4.4 Commercial Operation Date. The Commercial Operation Date shall occur within thirty (30) days after the Completion Deadline, as extended pursuant to Section 4.2 (the "Commercial Operation Date Deadline"). Seller will give written notice to Buyer (a) approximately thirty (30) days before Seller expects the Commercial Operation Date to occur and (b) when the Commercial Operation Date has occurred.

4.5 Delay Damages.

(a) If the Commercial Operation Date is not achieved by the Commercial Operation Date Deadline, Seller shall pay to Buyer Delay Damages for each day after the Commercial Operation Date Deadline until the Facility achieves Commercial Operation; provided, however, that if Buyer exercises its right to terminate this Agreement under Sections 11.2 and 11.3, Delay Damages shall be due and owing to the extent that such Delay Damages were due and owing as of the effective date of such termination.

(b) Each Party agrees and acknowledges that (i) the damages that Buyer would incur due to Seller's delay in achieving or inability to achieve any Condition Precedent, the Completion Deadline and/or the Commercial Operation Date Deadline would be difficult or impossible to predict with certainty, and (ii) it is impractical and difficult to assess actual damages in the circumstances stated, and therefore the Extension Payments, the liquidated damages provided at the end of Section 4.2, the termination rights and damage calculations under Sections 5.3(c) and 9.3(a), and the Delay Damages all as agreed to by the Parties as set forth herein are a fair and reasonable calculation of such damages. Notwithstanding the foregoing, this Article shall not limit the amount of damages payable to Buyer if this Agreement is terminated as a result of Seller's failure to achieve the Completion Deadline and/or Commercial Operation Date Deadline, or otherwise. Any such termination damages shall be determined in accordance with Section 11.3.

(c) By the tenth (10th) day following the end of the calendar month in which Delay Damages first become due and continuing by the tenth (10th) day of each calendar month during the period in which Delay Damages accrue (and the following months if applicable), Buyer shall deliver to Seller an invoice showing Buyer's computation of such damages and any amount due Buyer in respect thereof for the preceding calendar month. No later than ten (10) days after receiving such an invoice, Seller shall pay to Buyer, by wire transfer of immediately available funds to an account specified in writing by Buyer or by any other means agreed to by the Parties in writing from time to time, the amount set forth as due in such invoice. If Seller fails to pay such amounts when due, Buyer may draw upon any Development Period Credit Support for payment of such Delay Damages, and Buyer may exercise any other remedies available for Seller's default hereunder.

4.6 Early Completion. Seller may, but shall not be required to, achieve Commercial Operation on a date that is earlier than the Commercial Operation Date Deadline; provided, however, if Seller intends or expects to achieve Commercial Operation on a date that is earlier than three (3) months prior to the Commercial Operation Date Deadline, it must so notify Buyer in writing of such date by no later than six (6) months prior to the Commercial Operation Date.

ARTICLE V

SELLER'S OBLIGATIONS

5.1 Design, Construction and Operation of the Facility. Seller shall:

(a) At its sole expense, design, engineer, and construct the Facility and all related facilities in accordance with Good Utility Practice and the specifications listed on Attachment A.

(b) Seek, obtain, maintain, comply with and, as necessary, renew, and modify from time to time, at Seller's sole expense, the Permits and all other permits, certificates or other authorizations which are required by any applicable laws or Government Agencies as prerequisites to engaging in the sale of Net Energy at the Delivery Point as envisioned by the

ELECTRONICALLY FILED - 2018 June 5 2:20 PM - SCPSC - Docket # 2018-183-E - Page 24 of 70

Agreement and to meeting Seller's obligation to operate the Facility consistently with the terms of the Agreement.

(c) At Seller's sole expense, operate and maintain, provide security for and repair the Facility in accordance with this Agreement and Good Utility Practice.

(d) At Seller's sole expense, obtain and maintain policies of general liability insurance in accordance with Article IX.

(e) Comply with all directives of SCE&G Transmission pursuant to the applicable agreements for generator interconnection and transmission service, and cooperate with all reasonable requests by Buyer relating to Buyer's compliance with any such directives relating to deliveries of Net Energy from the Facility. The Parties recognize that Seller's compliance with any such directives of SCE&G Transmission due to system conditions on Buyer's Transmission System or Distribution System that require curtailment or interruption of Net Energy deliveries may result in reduced sales hereunder, without liability on the part of either Party. Notwithstanding the foregoing, Buyer shall have no right to curtail or interrupt Net Energy deliveries for economic reasons.

(f) Notwithstanding anything in this Article V to the contrary, no payment shall be due to Seller under Section 8.1 with respect to the Net Energy that is not delivered by Seller to the Delivery Point for any of the following reasons (such Net Energy, "Curtailed Energy"):

(i) delivery of Net Energy is curtailed through any SCE&G Transmission mechanism or procedure of any sort for redispatch, transmission loading, renewable integration procedures, or any similar or successor operating rules, procedures or systems, and for any other reason, in each case, in compliance with the Interconnection Agreement;

(ii) there is any curtailment by SCE&G Transmission in accordance with the Interconnection Agreement, or by the System Operator (if other than SCE&G Transmission), or otherwise for delivery of the Net Energy from the Facility, including planned outages for Transmission System network upgrades impacting the Interconnection Facilities;

(iii) an Emergency Condition; or

(iv) an event of Force Majeure.

(g) If at any time production and/or deliveries of Net Energy from the Facility are curtailed by Buyer for a reason other than as described in Section 5.1(f), then any lost Net Energy that Seller was ready, willing and able to deliver but was not delivered due to such event shall be counted as deemed Net Energy and compensated by Buyer to Seller at the applicable Net Energy Rate. Such amount of lost Net Energy shall be reasonably determined by Seller, subject to such determination being approved by Buyer, which approval shall not be unreasonably withheld. Such compensation shall constitute Seller's sole and exclusive remedy and Buyer's sole and exclusive liability for such an event.

5.2 General Obligations.

ELECTRONICALLY FILED - 2018 June 5 2:20 PM - SCPSC - Docket # 2018-183-E - Page 25 of 70

(a) Seller, during the Term of the Agreement, shall pay all present or future federal, state, municipal, or other lawful taxes or fees applicable to Seller, or the Facility, or by reason of the sale of Net Energy by Seller to Buyer up to and at the Delivery Point under the Agreement, plus all taxes associated with the generation and delivery of the Net Energy.

(b) Seller shall be responsible for the payment of all charges that result from any change in any applicable law that occurs after the Effective Date that imposes new or additional (i) obligations on a Party to obtain or provide transmission service or ancillary services prior to the Delivery Point, or (ii) variable integration charges or imbalance costs, fees, penalties, or expenses, or provides benefits that, in the case of either clauses (i) or (ii), are imposed, assessed or credited by the transmission provider based on the impacts of energy generated by variable generation projects generally (collectively, the "Variable Integration Costs"). Seller shall be responsible for all Variable Integration Costs, irrespective of whether the Variable Integration Costs are assessed against Seller or Buyer and, to the extent any Variable Integration Costs are incurred by Buyer, Seller shall promptly reimburse Buyer for such Variable Integration Costs.

(c) Seller shall purchase from Buyer all station power and energy used by the Facility and not provided by the Facility itself.

(d) Seller shall continue to (i) preserve, renew and keep in full force and effect, to the extent applicable, its organizational existence and good standing, and take all reasonable action to maintain all Permits, rights, privileges, licenses, and franchises necessary or desirable in the ordinary course of its business; (ii) comply with all Requirements of Law, and (iii) comply with all Project Contracts, material agreements, instruments and undertakings related to the Facility, except to the extent that any failure to so comply has not had, or is not reasonably likely to have, a material adverse effect on Seller's performance of its material obligations under this Agreement.

(e) Upon Buyer's request, Seller shall make available for Buyer's review the Project Contracts (or summaries thereof), Permits and other information in its possession, custody or control regarding the permitting, engineering, construction, condition and operations of the Facility, as Buyer may, from time to time, reasonably request; provided, however, that Seller may reasonably redact confidential information from Project Contracts (such redactions to be reasonably limited to pricing and otherwise an immaterial amount) and other non-public information to be made available to Buyer to comply with reasonable confidentiality obligations in favor of third parties.

(f) Seller shall indemnify, defend, and hold Buyer harmless from and against all Environmental Liability; provided that Buyer shall indemnify, defend, and hold Seller harmless against, any Environmental Liability but only to the extent resulting from the gross negligence or intentional misconduct of Buyer or any of its officers, employees, agents, contractors or subcontractors while at the Facility.

(g) Seller shall indemnify, defend and hold Buyer harmless from and against all losses, liabilities or claims, including reasonable attorneys' fees and court costs, of any and

ELECTRONICALLY FILED - 2018 June 5 2:20 PM - SCPSC - Docket # 2018-183-E - Page 26 of 70

all Persons for personal injury (including death) or property damage arising from or out of the operation of the Facility.

(h) The Facility shall be interconnected with SCE&G's Transmission System in accordance with the requirements for generator interconnection pursuant to the South Carolina Generator Interconnection Procedures, Forms, and Agreements and the Interconnection Agreement.

(i) Seller acknowledges that any written notice and information required by Buyer is solely for monitoring purposes, and that nothing contained in this Agreement shall create or impose upon Buyer any responsibility or liability for the development, construction, operation or maintenance of the Facility or Interconnection Facilities.

(j) Notwithstanding any provision of this Agreement to the contrary, Seller agrees that: (a) Buyer shall have no responsibility whatsoever for any costs and/or Taxes relating to the design, development, construction, maintenance, ownership, or operation of the Facility (including but not limited to any financing costs, and any costs and/or Taxes imposed by any Government Agency on or with respect to emissions from or relating to the Facility, and including but not limited to costs and/or Taxes related to any emissions allowances inter alia for oxides for sulfur dioxide or nitrogen, carbon dioxide, and mercury), all of which shall be entirely at Seller's sole cost and expense; and, (b) any risk as to the availability of production tax benefits, investment tax credits, grants or any other incentives relating to the design, development, construction, maintenance, ownership, or operation of the Facility shall be borne entirely by Seller. If any production or investment tax credit, grants, or any similar incentives or benefit relating to the Facility and/or Seller is unavailable or becomes unavailable at any time during the Term of this Agreement, Seller agrees that such event or circumstance will not: (a) constitute a Force Majeure or Regulatory Event; (b) excuse or otherwise diminish Seller's obligations hereunder in any way; or (c) give rise to any right by Seller to terminate or avoid performance under this Agreement. Seller agrees that it will solely and fully bear all risks, financial and otherwise throughout the Term, associated with Seller's or the Facility's eligibility to receive any such tax treatment or otherwise qualify for any preferential or accelerated depreciation, accounting, reporting, or tax treatment.

(k) Seller agrees and acknowledges that the Interconnection Agreement is (and will be) a separate agreement between Seller and SCE&G Transmission. Only the Interconnection Agreement will govern all obligations and liabilities set forth in the Interconnection Agreement, and Seller shall be solely and fully responsible for all costs and expenses for which Seller is responsible under the Interconnection Agreement. Notwithstanding any provision in this Agreement, nothing in the Interconnection Agreement, nor any other agreement between Seller on the one hand and SCE&G Transmission on the other hand, nor any alleged event of default thereunder, shall affect, alter, or modify the Parties' rights, duties, obligation, and liabilities hereunder. This Agreement shall not be construed to create any rights between Seller and SCE&G Transmission, and the terms of this Agreement are not (and will not) be binding upon SCE&G Transmission. Seller agrees and acknowledges that the System Operator will be solely responsible for its functions and that nothing in this Agreement will be construed to create

ELECTRONICALLY FILED - 2018 June 5 2:20 PM - SCPSC - Docket # 2018-183-E - Page 27 of 70

any rights between Seller and the System Operator, and Seller agrees to fully comply with all System Operator Instructions.

(l) Generally Accepted Accounting Principles ("GAAP") and SEC rules can require Buyer to evaluate various aspects of its economic relationship with Seller, e.g., whether or not Buyer must consolidate Seller's financial information. Buyer and its independent auditor shall have the right to inspect from time to time, upon reasonable notice to Seller, such books and records of Seller as are reasonably necessary in order for Buyer to determine whether Seller constitutes a VIE and the Agreement represents a VI. To the extent such inspection requires access to confidential information of Seller, Buyer shall execute an appropriate confidentiality agreement reasonably acceptable to Seller respecting such confidential information. From the Effective Date through the end of the Term, Seller covenants Buyer will not be required by any Requirements of Law or any accounting standard, including, but not limited to, those implemented or administered by FASB, to consolidate Seller or any of its Affiliates or permitted assigns as a VIE in Buyer's or any of its Affiliates' financial statements. Seller covenants to promptly notify Buyer following any determination made by Seller or its auditor that Seller constitutes a VIE for which Buyer is the Primary Beneficiary as a result of this Agreement considered individually or together with any other power purchase agreements between Seller and Buyer. At the time of execution of this Agreement and thereafter prior to each anniversary of the Commercial Operation Date during the Term, Seller shall provide Buyer a VIE certification form in the form of Attachment E hereto signed by the chief financial officer of Seller.

(m) Seller shall provide to Buyer all information, instruments, documents, statements, certificates, and records relating to this Agreement and/or the Facility as requested by Buyer concerning any administrative, regulatory, compliance, or legal requirements determined by Buyer to fulfill any Requirements of Law, regulatory reporting requirements or otherwise relating to any request by any Government Agency. Seller shall, at its own expense, provide Buyer with all information requested by Buyer to register, verify, or otherwise validate or obtain any Government Agency approval or any other third party recognition of the Net Energy for use by Buyer, and at Buyer's request Seller shall register, verify, or otherwise validate or obtain any Government Agency approval and/or any other third party recognition of the Net Energy.

5.3 Specific Obligations Related to Construction.

(a) Seller shall construct and install the Facility in a good and workmanlike manner. Prior to commencement of construction and installation of the Facility, Seller shall notify Buyer of the intended date of commencement of construction, and Buyer shall have the right to monitor construction and installation of the Facility. Upon completion of the construction and installation of the Facility, Seller shall provide Buyer with "as-built" drawings setting forth in as sufficient detail as required by Buyer in its reasonable discretion, the location of all components of the Facility.

(b) Within five (5) days after the end of each calendar month following the Effective Date and until the end of the month in which the Commercial Operation Date occurs, Seller

ELECTRONICALLY FILED - 2018 June 5 2:20 PM - SCPSC - Docket # 2018-183-E - Page 28 of 70

ELECTRONICALLY FILED - 2018 June 5 2:20 PM - SCPSC - Docket # 2018-183-E - Page 29 of 70

shall prepare and submit to Buyer a written status report which shall cover the previous calendar month, in a manner and format (hard copy and electronic) reasonably acceptable to Buyer and shall include (a) a detailed description of the progress of the Facility construction, (b) a statement of any significant issues which remain unresolved and Seller's recommendations for resolving the same, (c) a summary of any significant events which are scheduled or expected to occur during the following thirty (30) days, and (d) all additional information reasonably requested by Buyer. If Seller has reason to believe that the Facility is not likely to timely achieve any Condition Precedent, Milestone, the Completion Deadline, or the Commercial Operation Date Deadline, Seller shall provide written notice to Buyer with all relevant facts. Following the Commercial Operation Date, Seller shall promptly provide to Buyer information requested by Buyer to verify any amounts of delivered Net Energy, or to otherwise audit the Net Energy delivered to Buyer. Seller shall provide Buyer with any other information germane to this Agreement reasonably requested by Buyer.

(c) Buyer shall have the right to terminate this Agreement in accordance with Sections 11.2 and 11.3 below upon thirty (30) days' prior written notice to Seller if the Facility fails to achieve any of the milestones (each a "Milestone") set forth in subsections 5.3(c)(i) through 5.3(c)(iii) by the applicable date indicated below. Such Milestone dates may be amended to the extent that Seller has provided to Buyer, not less than ten (10) days prior to the relevant Milestone date, a remediation plan that provides a detailed reasonable plan for causing the Facility to achieve the Milestone within sixty (60) days of the original date, and implements and diligently pursues such remediation plan to completion such that the applicable Milestone(s) are achieved within such sixty (60) day period:

(i) Failure by Seller to have entered into the Project Contracts and placed all required deposits pursuant thereto on or before one hundred eighty (180) days prior to the Commercial Operation Date Deadline; or

(ii) Failure by Seller to have issued notice to proceed under the EPC Contract on or before one hundred eighty (180) days prior to the Commercial Operation Date Deadline; or

(iii) Failure by Seller to take delivery of all Major Equipment pursuant to the Major Equipment agreements on or before the day that is ninety (90) days prior to the Commercial Operation Date Deadline. For purposes of this Section 5.3(c)(iii), pursuant to Section 4.6, the Commercial Operation Date Deadline shall be adjusted for any notification from Seller to Buyer of the expectation to achieve Commercial Operation on a date that is earlier than the Commercial Operation Date Deadline.

5.4 Buyer Right of First Offer. If Buyer terminates this Agreement pursuant to Section 5.3(c), then for a period of two (2) years following the date of such termination Buyer (a) shall have an exclusive right pursuant to this Section 5.4 to enter into an Alternative Agreement to purchase the Net Energy from the Facility, or any portion thereof as specified by Buyer under an Alternative Agreement, or any other solar photovoltaic-powered electricity generating facilities on the Facility Premises, under an Alternative Agreement, and (b) Seller shall not be entitled to sell the Net Energy produced by the Facility or such other

ELECTRONICALLY FILED - 2018 June 5 2:20 PM - SCPSC - Docket # 2018-183-E - Page 30 of 70

solar photovoltaic-powered electricity generation facilities, unless Seller shall, prior to making an offer to, accepting an offer from or entering into any agreement with any other Person regarding the sale of the Net Energy produced by the Facility or such other solar photovoltaic-powered electricity generation facilities, have provided written notice to Buyer that Seller is prepared to enter into an Alternative Agreement to sell all the Net Energy produced by the Facility or such other solar photovoltaic-powered electricity generation facilities to Buyer. If Buyer provides written notice to Seller within thirty (30) Days of the date that Buyer receives such notice from Seller that Buyer desires to exercise its right to enter into an Alternative Agreement, then the Parties shall enter into good-faith negotiations to make those limited changes to the Alternative Agreement as are necessary and appropriate to reflect the development status of the Facility at the time the Alternative Agreement is entered into, the dates by which actions are to be taken by the Parties under the Alternative Agreement, and similar matters within ten (10) Business Days after delivery of Buyer's notice, and the Parties shall execute and deliver the Alternative Agreement no later than thirty (30) Days following Buyer's notification to Seller of the exercise of its option pursuant to this Section 5.4. If Buyer does not provide written notice to Seller within thirty (30) Days after receiving Seller's notice, then Buyer shall have no further rights with respect to the Facility or any other solar photovoltaic-powered electricity generation facilities on the Facility Premises, and Seller may sell the output of the Facility or such other solar photovoltaic-powered electricity generation facilities without further restriction. This Section 5.4 shall survive the termination of this Agreement.

BUYER'S OBLIGATIONS

5.5 Distribution and Transmission Service. Buyer shall, at its expense, be responsible for obtaining firm service over the Distribution and/or Transmission Systems to the extent such service is necessary for delivery of the Net Energy of the Facility from the Delivery Point. Buyer shall provide Seller written notice that all essential facilities within Buyer's control are in place and operational prior to Buyer's receipt of Test Energy.

5.6 Cooperation. Buyer agrees to cooperate with Seller in any applications for Permits, certificates or other authorizations as described in Section 5.1(b). Buyer's obligation under this section shall consist only of providing nonproprietary information in its possession, custody or control necessary to complete any applications and responding to requests from the relevant Government Agencies or other Persons.

ARTICLE VI

ELECTRICITY PRODUCTION AND PLANT MAINTENANCE

6.1 Forecasting and Availability.

(a) No later than sixty (60) calendar days prior to the projected Commercial Operation Date, and prior to October 1 of each Calendar Year thereafter during the Term, and without waiving any rights of Buyer or the requirements and obligations of Seller

ELECTRONICALLY FILED - 2018 June 5 2:20 PM - SCPSC - Docket # 2018-183-E - Page 31 of 70

specified in Section 3.5, Seller shall submit to Buyer in writing a good faith estimate of each month's average-day energy production to be generated by the Facility and delivered to Buyer during the following Calendar Year, including the time, duration and magnitude of any scheduled maintenance period(s) or reductions in Net Energy to be delivered to Buyer. This forecast shall include an expected range of uncertainty based on historical operating experience. Seller shall update the forecast for each month at least five (5) Business Days before the first Business Day of such month. In addition, Seller shall promptly update a forecast at any time information becomes available indicating a change in the forecast relative to the most previously provided forecast.

(b) Seller shall provide or cause to be provided to Buyer a copy of a rolling one hundred and twenty (120) hour forecast of the expected Net Energy production from the Facility, by hour, for each upcoming five (5) day period. This forecast shall include an expected range of uncertainty based on historical operating experience. On or before 0600 Eastern Prevailing Time on the Business Day immediately preceding the day on which Net Energy is to be delivered, Seller shall provide Buyer with an hourly forecast of availability for each hour of the next day. An hourly forecast provided on a day before any non-Business Day shall also include forecasts for each day to and including the next Business Day. Seller shall promptly update an hourly forecast any time information becomes available indicating a change in the forecast of the Net Energy from the then-current forecast. The Parties shall cooperate to implement and use automatic forecast updates to the extent feasible. Without limiting the foregoing, Buyer shall utilize availability data provided by Seller to create rolling forecast of expected Net Energy production, by hour, for the next forty-eight (48) hours. To the extent Seller provides such forecasts it shall prepare such forecasts and updates (or cause such forecasts and updates to be prepared) by utilizing a solar prediction model or service (a) that is commercially available or proprietary to Seller or an Affiliate of Seller, and (b) reasonably comparable to models or services commonly used in the solar energy industry and that reflect solar availability, so long as such model or service is available at a commercially reasonable cost.

(c) In the event that Seller has any information or other commercially reasonable basis to believe that the production from the Facility on any day will be materially lower or higher than what would otherwise be expected based on the forecasts provided pursuant to Section 6.1, then Seller will inform Buyer of such circumstance by 0500 Eastern Prevailing Time on the preceding Business Day.

6.2 Plant Maintenance.

(a) The Parties agree to coordinate planned maintenance schedules for the temporary operational removal of the Facility from service to perform work on specific components in accordance with a pre-planned operations schedule, such as for a planned annual overhaul, inspections, or testing of specific equipment of the Facility. Seller agrees to provide its proposed planned maintenance schedule for the next Calendar Year by October 1st of each Calendar Year. By October 31 of such Calendar Year, Buyer shall notify Seller in writing whether Seller's planned maintenance schedule is acceptable. If Buyer does not accept a particular planned maintenance period scheduled by Seller, Buyer shall advise

Seller of the time period closest to the planned period when the outage can be scheduled. Seller shall schedule outages only during periods approved by Buyer, and such approval shall not be unreasonably withheld (each a "Scheduled Outage"). Once the schedule for the maintenance plan has been established and approved, either Party requesting a subsequent change in such schedule, except when the change is due to Force Majeure, must obtain approval for such change from the other Party, such approval not to be unreasonably withheld. Seller shall plan Scheduled Outages for the Facility in accordance with Good Utility Practice, and the Parties acknowledge that Good Utility Practice shall dictate when Scheduled Outages occur. Seller shall use its reasonable commercial efforts in accordance with Good Utility Practice to not plan Scheduled Outages during the following periods: June 1 through September 30. Scheduled Outages, in aggregate, shall not exceed seven (7) days during any Contract Year.

(b) If Seller needs or desires to schedule a Maintenance Outage of the Facility, Seller shall notify Buyer, as far in advance as reasonable and practicable under the circumstances, of such proposed Maintenance Outage, and the Parties shall plan such outage to mutually accommodate the reasonable requirements of Seller and delivery expectations of Buyer. Notice of a proposed Maintenance Outage shall include the expected start date of the outage, the amount of output of the Facility that will not be available and the expected completion date of the outage. Buyer may request reasonable modifications in the schedule for the outage. Subject to its operational and maintenance needs, Seller shall comply with such requests to reschedule a Maintenance Outage. If rescheduled, Seller will notify Buyer of any subsequent changes in the output that shall not be available to Buyer and any changes in the Maintenance Outage completion date. As soon as practicable, any such notifications given orally shall be confirmed in writing.

(c) Seller shall promptly provide to Buyer an oral report of all outages, Emergency Conditions, de-ratings, major limitations, or restrictions affecting the Facility, which report shall include the cause of such restriction, amount of generation from the Facility that will not be available because of such restriction, and the expected date that the Facility will return to normal operations. Seller shall update such report as necessary to advise Buyer of any materially changed circumstances relating to the aforementioned restrictions. As soon as practicable, all oral reports shall be confirmed in writing. Seller shall promptly dispatch personnel to perform the necessary repairs or corrective action in an expeditious and safe manner in accordance with Good Utility Practice.

(d) Seller shall act in a commercially reasonable manner to maximize the output of the Facility to generate the Net Energy and to minimize the occurrence, extent, and duration of any event adversely affecting the generation of the Net Energy, in each case consistent with Good Utility Practice.

6.3 Communication. Seller shall comply with reasonable requests by Buyer regarding day-to-day and hour-by-hour communication between the Parties relative to electricity production and maintenance scheduling.

ELECTRONICALLY FILED - 2018 June 5 2:20 PM - SCPSC - Docket # 2018-183-E - Page 32 of 70

ELECTRONICALLY FILED - 2018 June 5 2:20 PM - SCPSC - Docket # 2018-183-E - Page 33 of 70

6.4 Seller's Plant Personnel. During the Term, Seller shall employ, or cause a qualified service provider engaged by Seller to employ qualified personnel for managing, operating and maintaining the Facility and for coordinating with Buyer. Seller shall ensure that operating personnel are available, on site or at a remote monitoring location, at all times, twenty-four (24) hours per calendar day and seven (7) calendar days per week. Additionally, during the Term, Seller shall operate and maintain the Facility in such manner as to ensure compliance with its obligations hereunder and in accordance with applicable law and Good Utility Practice.

ARTICLE VII

METERING

7.1 Metering Equipment. The amount of Net Energy delivered to Buyer shall be derived from data measured by the meter(s) and associated telecommunications equipment installed at the Delivery Point by SCE&G Transmission ("Buyer's Meter(s)") pursuant to any agreement between SCE&G Transmission and Seller for interconnection of the Facility. Seller shall authorize SCE&G Transmission to provide meter data to Buyer, and hereby grants Buyer with rights to physically access the Buyer's Meter. Seller shall be responsible for paying SCE&G Transmission for all costs relating to the Buyer's Meter, including, without limitation, its procurement, installation, operation, calibration, and maintenance. Seller shall ensure in its arrangement with SCE&G Transmission for the Buyer's Meter to include communication equipment that enables Buyer to access and read the meter from a remote location. Seller shall provide Buyer (at Seller's cost) with appropriate telephonic/electronic communication to allow Buyer to remotely read the meter. Except as provided in Sections 7.2 and 7.3, Buyer's Meter(s) shall be used for quantity measurements and billing under this Agreement. Seller, at its sole expense, may install and maintain check meters and all associated measuring equipment necessary to permit an accurate determination of the quantities of Net Energy delivered under this Agreement; provided, however, that such equipment shall be operated and maintained in a manner that does not interfere with the installation, maintenance, and operation of Buyer's Meter(s).

7.2 Measurements. Readings of Buyer's Meter(s) made by Buyer shall be conclusive as to the amount of Net Energy delivered to Buyer hereunder; provided, however, that if Buyer's Meter(s) is out of service or is determined, pursuant to Section 7.3 hereof, to be registering inaccurately, measurement of Net Energy delivered hereunder shall be determined by, in the following order:

(a) Seller's check meter, if installed, annually tested and registering accurately; or

(b) In the absence of an installed, annually tested and accurately registering check meter belonging to Seller, making a mathematical calculation if, upon a calibration test of Buyer's Meter, a percentage error is ascertainable; or

(c) In the absence of an installed, annually tested and properly registering check meter belonging to Seller, and an ascertainable percentage of error in Buyer's Meter,

estimating by reference to quantities measured during periods of similar conditions when Buyer's Meter was registering accurately; or

(d) If no reliable information exists as to the period over which Buyer's Meter was registering inaccurately, it shall be assumed for correction purposes hereunder that such inaccuracy began at a point in time midway between the testing date and the last previous date on which such meter was tested and found to be accurate; provided, however, that the deemed period of the inaccuracy shall not exceed one hundred eighty (180) days.

7.3 Testing and Correction. The accuracy of Buyer's Meter(s) shall be tested and verified by Buyer annually. Buyer shall have the right, at its own expense, to test and verify Seller's meter(s) upon reasonable notice, provided such testing shall not exceed one (1) test during a Calendar Year, or more frequently if there is just cause. If Seller has installed check meters in accordance with Section 7.1 hereof, Seller shall test and verify such meters annually. Each Party shall bear the cost of the annual testing of its own meters.

(a) If either Party disputes a meter's accuracy or condition, it shall so advise the meter's owner in writing. The meter's owner shall, within fifteen (15) days after receiving such notice, advise the other Party in writing as to its position concerning the meter's accuracy and reasons for taking such position. If the Parties are unable to resolve their disagreement through reasonable negotiations, either Party may submit such dispute to an unaffiliated third-party engineering company mutually acceptable to the Parties to test the meter.

(b) Should the meter be found to be registering within a one percent (1%) variance, the Party contesting the meter's accuracy shall bear the cost of inspection; otherwise, such cost shall be borne by the meter's owner. Any repair or replacement of such a meter found to be operating beyond the permitted one percent (1%) variance shall be made at the expense of the owner of that meter as soon as practicable, based on the third-party engineer's report. If, upon testing, any meter is found to be in error by an amount greater than a one percent (1%) variance, such meter shall be repaired or replaced promptly, any previous recordings by such meter shall be adjusted in accordance with Section 7.2, any prior payments made for Net Energy and/or invoices for payments not yet made shall be adjusted to reflect the corrected measurements determined pursuant to Section 7.2. If the difference of the payments actually made by Buyer minus the payment based upon the corrected measurements is a positive number, Seller shall pay the difference to Buyer; if the difference is a negative number, Buyer shall pay the difference to Seller. In either case, the Party paying such difference shall also pay interest as described in Section 8.1(d) for late payments and such payment (including such interest) shall be made within ten (10) days of receipt of a corrected billing statement.

7.4 Maintenance and Records. Each Party has the right to be present whenever the other Party tests and/or calibrates the equipment used in measuring or checking the measurement of the Net Energy delivered hereunder. Each Party shall endeavor to give notice of five (5) days, but in no event less than forty-eight (48) hours, to the other Party in advance of taking any such actions. The records from the measuring equipment remain the property of Seller

ELECTRONICALLY FILED - 2018 June 5 2:20 PM - SCPSC - Docket # 2018-183-E - Page 34 of 70

or Buyer, respectively, but, upon request, each Party will provide access to the other, upon reasonable notice and during normal business hours, to review the Party's metering and billing and maintenance records, including supporting documentation, necessary to verify the accuracy of bills. Each Party is permitted to audit such records of the other Party no more frequently than once each Calendar Year.

ARTICLE VIII

BILLING AND PAYMENT

8.1 Billing and Payment.

(a) Buyer shall read the Buyer's Meter or cause such meter to be read as soon as practicable after the last day of the previous calendar month and shall report such reading for the Net Energy delivered for the previous calendar month to Seller.

(b) Seller shall create and send an invoice to Buyer based on Buyer's Meter readings and deliveries of Net Energy.

(c) Buyer's payment to Seller for Net Energy received shall be paid by electronic funds transfer by the twentieth (20th) of each month or thirty (30) days following Buyer's receipt of Seller's invoice, whichever is later. If such date falls on a weekend or legal holiday, the due date shall be the next Business Day.

(d) Payments made after the due date shall be considered late and shall bear interest on the unpaid balance at a rate equal to the average daily prime rate as determined from the "Money Rates" section of the Wall Street Journal (the "Interest Rate"), for the days of the late payment period multiplied by the number of days elapsed from and including the due date, to but excluding the payment date. In the event this index is discontinued or its basis is substantially modified, the Parties shall agree on a substitute equivalent index.

(e) If either Party hereto shall find at any time within one (1) year after the date of any payment hereunder that there has been an overcharge or undercharge, the Party finding the error shall promptly notify the other Party in writing. In the event of an undercharge, Buyer, within thirty (30) days of the date of the notice of error, shall pay the amount due plus interest accruing at the Interest Rate from the time of payment of the undercharge through the date of payment correcting the undercharge. In the event of an overcharge, Seller, within thirty (30) days of the notice of error, shall refund the overpayment plus interest accruing at the Interest Rate from the time of payment of the overcharge through the date of payment correcting the overcharge.

(f) Each Party shall have the right, at its sole expense during normal business hours, to examine the other Party's records, but only after prior notice and only to the extent necessary to verify the accuracy of any statement, charge, notice, or computation made hereunder.

ELECTRONICALLY FILED - 2018 June 5 2:20 PM - SCPSC - Docket # 2018-183-E - Page 35 of 70

ELECTRONICALLY FILED - 2018 June 5 2:20 PM - SCPSC - Docket # 2018-183-E - Page 36 of 70

ARTICLE IX

INSURANCE/CREDIT AND COLLATERAL REQUIREMENTS

9.1 Insurance. At all times during the Term of this Agreement, Seller shall maintain at its own expense insurance policies for the Facility and its tangible assets in such amounts and against such risks and losses as set forth in Attachment D hereto. Within ten (10) Business Days after receipt of a request for the same from Buyer, Seller shall deliver to Buyer a certificate of insurance for any or all policies maintained in accordance with this Section 9.1, which certificate shall include at least the following information: (i) the name of the insurance company, policy number and expiration date; and (ii) the coverage and limits on coverage, including the amount of deductibles or self-insured retentions.

9.2 Credit Support/Grant of Security Interest/Remedies. To secure its obligations under this Agreement and to the extent Seller delivers Performance Assurance hereunder, Seller hereby grants to Buyer a present and continuing first priority security interest in, and lien on (and right of setoff against), and assignment of, any Cash Collateral and any and all proceeds resulting therefrom or the liquidation thereof, whether now or hereafter held by, on behalf of, or for the benefit of, Buyer, and each Party agrees to take such action as the other Party reasonably requires in order to perfect the Buyer's first-priority security interest in, and lien on (and right of setoff against), such Cash Collateral and any and all proceeds resulting therefrom or from the liquidation thereof. Upon, or at any time after the occurrence and during the continuation of, an Event of Default by Seller, or a Termination Date as a result thereof or in connection with a claim by Buyer for indemnification under Article XII, or as otherwise provided in this Agreement, Buyer may do any one or more of the following: (i) exercise any of the rights and remedies of a secured party with respect to all Performance Assurance, including any such legal rights and remedies then in effect; (ii) exercise its rights of setoff against any such Cash Collateral and any and all proceeds resulting therefrom or from the liquidation thereof; (iii) draw on any outstanding Letter of Credit or Surety Bond issued for its benefit; and (iv) liquidate all or any portion of any Performance Assurance then held by or for the benefit of Buyer free from any claim or right of any nature whatsoever of Seller, including any equity or right of purchase or redemption by Seller. Buyer shall apply the proceeds realized upon the exercise of any such rights or remedies to reduce the Seller's obligations under the Agreement (Seller remaining liable for any amounts owing to Buyer after such application), subject to Buyer's obligation to return any surplus proceeds remaining after such obligations are satisfied in full.

9.3 Development Period Credit Support. In order to secure Seller's obligations prior to Commercial Operation of the Facility, at Seller's expense, Seller shall post and maintain in favor of Buyer the Development Period Credit Support in accordance with the following terms and conditions:

(a) The Development Period Credit Support shall be posted within twenty (20) Business Days of the Effective Date of this Agreement; provided, however, that if such Development Period Credit Support is not posted within twenty (20) Business Days of the Effective Date of this Agreement, this Agreement shall become null and void and deemed to

be terminated, without liability of either Party to the other Party under this Agreement, as of the twenty-first (21st) Business Day following the Effective Date of this Agreement. Furthermore, Buyer shall have the right to draw upon, exercise remedies against, or otherwise retain the full amount of the Development Period Credit Support in connection with, among other things, any of the following:

1) The termination of this Agreement pursuant to Section 3.1(b); or

2) The termination of this Agreement pursuant to Section 5.3(c); or

3) The termination of this Agreement pursuant to Section 11.2 by the Buyer as the non-defaulting Party.

If this Agreement is terminated pursuant to Section 15.18(c), then the Development Period Credit Support shall be returned to the Seller net of any outstanding balance owed by Seller to Buyer in accordance with the terms of this Agreement.

(b) When all or a portion of the Development Period Credit Support is posted in the form of Cash Collateral, any such deposit by Seller shall at all times be held under the possession and control of Buyer and, if in an account maintained with an institution, either where Buyer is the institution's customer or pursuant to a control agreement in a form and under terms which are reasonably acceptable to Buyer and Seller, to pay claims made by Buyer pursuant to this Agreement.

(c) After Seller has provided written notification to Buyer of the satisfaction of the Milestones defined in Sections 5.3(c)(i), 5.3(c)(ii), and 5.3(c)(iii), Seller may change the form of the Development Period Credit Support at any time and from time to time upon reasonable prior written notice to Buyer; provided that the Development Period Credit Support shall at all times satisfy the requirements of this Agreement, including, but not limited to, the requisite approvals of Buyer as required in this Agreement.

(d) Seller shall maintain the Development Period Credit Support, and Buyer shall return or release its interest in any of the undrawn or remaining Development Period Credit Support, if any, within fifteen (15) days after the earlier of (i) the date on which Seller has posted the Delivery Term Credit Support, and (ii) all payment obligations of the Seller arising under this Agreement, including any Termination Payment, indemnification payments or other damages are paid in full.

(e) To the extent applicable to the form of the Development Period Credit Support, Seller shall replenish the Development Period Credit Support to the full required amount within thirty (30) days following a draw or other exercise of remedies against the Development Period Credit Support by Buyer.

9.4 Delivery Term Credit Support. In order to secure Seller's obligations during the Commercial Operation of the Facility, at Seller's expense, Seller shall post and maintain in favor of Buyer the Delivery Term Credit Support in accordance with the following terms and conditions:

ELECTRONICALLY FILED - 2018 June 5 2:20 PM - SCPSC - Docket # 2018-183-E - Page 37 of 70

(a) On or before the thirtieth (30th) day following the Commercial Operation Date, Seller shall post the Delivery Term Credit Support.

(b) When all or a portion of the Delivery Term Credit Support is posted in the form of Cash Collateral, any such deposit shall be held under the possession and control of Buyer and, if in an account maintained with an institution, either where Buyer is the institution's customer or pursuant to a control agreement in a form and under terms which are reasonably acceptable to Buyer and Seller, to pay claims made by Buyer pursuant to this Agreement.

(c) Seller may change the form of the Delivery Term Credit Support at any time and from time to time upon reasonable prior written notice to Buyer; provided that the Delivery Term Credit Support shall at all times satisfy the requirements of this Agreement, including, but not limited to, the requisite approvals of Buyer as required in this Agreement.

(d) Seller shall maintain the Delivery Term Credit Support and Buyer shall return or release its interest in any of the undrawn or remaining portion of the Delivery Term Credit Support, if any, within fifteen (15) days after the later of (i) the expiration of this Agreement, or (ii) all payment obligations of the Seller arising under this Agreement, including, but not limited to, any Termination Payment due under this Agreement, any indemnification payments or other damages, are paid in full; provided that if Seller is the Defaulting Party, any undrawn portion of the Delivery Term Credit Support may be applied toward such Termination Payment.

(e) To the extent applicable to the form of the Delivery Term Credit Support, Seller shall replenish the Delivery Term Credit Support to the full required amount within thirty (30) days following a draw or other exercise of remedies against the Delivery Term Credit Support by Buyer.

ARTICLE X

FORCE MAJEURE

10.1 Force Majeure. Force Majeure is defined as an event or circumstance that is not reasonably foreseeable, is beyond the reasonable control of and not caused by the negligence or lack of due diligence of the Party claiming Force Majeure or that Party's contractors or suppliers, and adversely affects the performance by that Party of its obligations under or pursuant to this Agreement. Such events or circumstances may include, but are not limited to, actions or inactions of civil or military authority (including courts and governmental or administrative agencies), acts of God, war, riot or insurrection, blockades, embargoes, sabotage, epidemics, explosions and fires not originating in the Facility or caused by its operation, hurricanes, floods, strikes, lockouts or other labor disputes or difficulties (not caused by the failure of the affected Party to comply with the terms of a collective bargaining agreement). However, the obligation to use reasonable diligence shall not be interpreted to require resolution of labor disputes by acceding to demands when such course is inadvisable

ELECTRONICALLY FILED - 2018 June 5 2:20 PM - SCPSC - Docket # 2018-183-E - Page 38 of 70

in the discretion of the Party having such difficulty. Payment of money shall not be excused by Force Majeure.

10.2 Remedial Action. A Party shall not be liable to the other Party to the extent the first Party is prevented from performing its obligations due to an event of Force Majeure. The Party rendered unable to fulfill any obligation by reason of a Force Majeure shall take all reasonable actions necessary to remove such inability with all due speed and diligence. Such partially performing or nonperforming Party shall be prompt and diligent in attempting to remove the cause of its failure to perform. Neither Party shall be required to remedy, in whole or in part, an event of Force Majeure if such remedy is inconsistent with Good Utility Practice. The suspension of performance due to a claim of Force Majeure must be of no greater scope and of no longer duration than is required by the Force Majeure. This Agreement may be terminated by the non-claiming Party upon ten (10) days prior written notice to the claiming Party with no further obligation to the Party impacted by Force Majeure if a Force Majeure event prevents the performance of a material portion of the obligations hereunder and such Force Majeure event is not resolved within eight (8) months after the commencement of such Force Majeure event. In the event of such termination, neither Party shall have any further obligation to the other Party under this Agreement except such obligations which have already accrued at termination and/or survive the termination or expiration of this Agreement as provided in Section 15.19.

10.3 Exclusions from Definition of Force Majeure. Notwithstanding anything in the Agreement to the contrary, "Force Majeure" shall not mean:

(a) Inclement weather affecting construction, start-up, or operation of the Facility or related facilities that does not otherwise meet the definition of "Force Majeure;"

(b) Changes in market conditions or governmental action that affect Buyer or Seller, as applicable, the cost of Seller's supply of Net Energy from the Facility, or the ability of Buyer to obtain energy at a rate lower than the Net Energy Rate and/or other pricing provisions agreed upon by the Parties pursuant to this Agreement;

(c) Equipment breakdown or inability to use equipment caused by its design, construction, operation, maintenance or inability to meet regulatory standards, or otherwise caused by an event originating in the control of a Party;

(d) Unavailability of equipment, repairs or spare parts for the Facility, except to the extent due to a qualifying event of Force Majeure;

(e) Failure to obtain on a timely basis and maintain a necessary Permit or other regulatory approval or any undue delay in obtaining, maintaining, or renewing any Permit;

(f) Scheduled maintenance on the Distribution System or Transmission System; or

(g) Any event, including a change in any Requirements of Law or accounting standard that results in requiring Buyer to consolidate Seller or any of its Affiliates or permitted assigns as a VIE in Buyer's financial statements.

ELECTRONICALLY FILED - 2018 June 5 2:20 PM - SCPSC - Docket # 2018-183-E - Page 39 of 70

10.4 Notice. In the event of any delay or nonperformance resulting from Force Majeure, the Party suffering the event of Force Majeure shall, as soon as practicable after the occurrence of the Force Majeure event but in no event more than forty-eight (48) hours after the commencement of an event of Force Majeure, notify the other Party in writing of the nature, cause, date of commencement thereof, and the anticipated extent of any delay or interruption in performance.

ARTICLE XI

DEFAULT, TERMINATION, REMEDIES

11.1 Events of Default. Each of the following shall constitute an Event of Default:

(a) a Party fails to make when due, any payment required pursuant to this Agreement;

(b) Seller fails to timely satisfy the Completion Deadline (as such time period may be extended pursuant to Section 4.2);

(c) Seller fails to timely satisfy the Commercial Operation Date Deadline by the date that is ninety (90) days after such Completion Deadline;

(d) any of the representations, warranties or covenants made by a Party in this Agreement is false or misleading in any material respect, or not performed as required in a timely manner, and is not cured within the applicable Cure Period;

(e) Seller, or the entity that controls or owns Seller, ceases the conduct of active business; or if proceedings under the federal bankruptcy law or insolvency laws shall be instituted by or for or against Seller or the entity that controls or owns Seller; or if a receiver shall be appointed for Seller or any of Seller's assets or properties, or for the entity that controls or owns Seller; or if any part of Seller's assets shall be attached, levied upon, encumbered, pledged, seized or taken under any judicial process, and such proceedings shall not be vacated or fully stayed within sixty (60) calendar days thereof; or if Seller shall make an assignment for the benefit of creditors; or if Seller admits in writing its inability to pay its debts as they become due.

(f) a Party breaches any provision of the Agreement not specifically enumerated in this Section 11.1, and such breach is not cured within the applicable Cure Period; provided, however, there is no Cure Period for those breaches or Events of Default referenced in Section 11.1(i)(III) below;

(g) a Party fails to maintain in full force and effect any Permit necessary for such Party to perform its obligations under this Agreement;

(h) in the case of Seller, the Facility fails to deliver eighty-five percent (85%) of the Guaranteed Energy Production (subject to any applicable adjustments to the Contract Quantity described in Section 3.5) in any two (2) consecutive Contract Years; or

ELECTRONICALLY FILED - 2018 June 5 2:20 PM - SCPSC - Docket # 2018-183-E - Page 40 of 70

ELECTRONICALLY FILED - 2018 June 5 2:20 PM - SCPSC - Docket # 2018-183-E - Page 41 of 70

(i) Except as otherwise provided herein, any defaulting Party shall have the following cure periods to accomplish the cure of any breach before it becomes an Event Default (the "Cure Period"):

(I) For breach of a monetary obligation: ten (10) days following delivery of written notice that a payment is due unless such payment is contested pursuant to Article XIV below; and

(II) For breach of a nonmonetary obligation (other than as provided in Section 11.1(i)(III) below): thirty (30) days following delivery of written notice of such breach; provided, that such defaulting Party shall have an additional period of time to cure such nonmonetary breach so long as the defaulting Party is making a good faith effort to cure the breach, the total cure period not to exceed sixty (60) days in the aggregate.

(III) Notwithstanding anything else herein to the contrary, there is no Cure Period for (A) breaches of the requirements to use only solar photovoltaic as the source of energy for the Net Energy and to maintain the status of the Facility as a Qualifying Facility pursuant to Section 2.3; (B) Seller's failure to achieve the Completion Date by the Completion Deadline pursuant to Section 4.2 and to achieve the Commercial Operation Date by the Commercial Operation Date Deadline pursuant to Section 4.4, in each case, as such deadlines are extended; (C) failure to comply with all directives of SCE&G Transmission pursuant to the applicable agreements for generator interconnection and transmission service, and cooperate with all reasonable requests by Buyer relating to Buyer's compliance with any such directives relating to deliveries of Net Energy from the Facility in accordance with Section 5.1(e); (D) Section 5.3(c); and (E) the Events of Default referenced in Sections 11.1(b), (c), (e) or (h) above.

(j) Each Party agrees to accept the cure of a breach by a defaulting Party offered by a Financing Party who has provided financing to such defaulting Party; provided that the non-defaulting Party is under no obligation hereunder to notify the Financing Party of any breach or of its ability to cure such breach hereunder.

(k) An Event of Default shall not have occurred hereunder until the proper notice has been delivered and the applicable Cure Period has expired without the breach being cured.

11.2 Termination.

(a) In the event the defaulting Party fails to cure the Event of Default within the period for curative action, if any, under Section 11.1, the non-defaulting Party may terminate the Agreement by notifying the defaulting Party in writing (the "Termination Notice") of the decision to terminate and the Termination Date. If the non-defaulting Party terminating this Agreement is entitled to a Termination Payment, it shall provide to the defaulting Party along with its Termination Notice, or as soon as practicable after providing the Termination Notice, its calculation in writing of the Termination Payment that it is owed hereunder. Such calculation shall be provided in writing to the defaulting Party by the non-defaulting Party with reasonable detail as to its determination.

(b) Termination of this Agreement for any reason shall not affect the accrued rights or obligations of either Party as of such termination. Buyer shall have the right to refuse delivery of any Net Energy that does not satisfy any warranties set forth in Section 3.2 or to claim actual damages incurred by Buyer for any such Net Energy accepted by Buyer without knowledge of its noncompliance. In addition, in the event that Seller shall not be in compliance with Section 5.1(e), Buyer shall have the right to refuse deliveries of Net Energy immediately without the passage of any applicable Cure Period or grace period.

(c) If a Default of a Party shall wholly or partly affect the performance (or the ability to perform) of the other Party under this Agreement, then any non-performance of the non-defaulting Party shall be excused to the extent affected by the Event of Default.

(d) Other rights to terminate (and the consequences thereof) in addition to those provided in this Article XI are provided in Sections 3.1, 5.3, 9.3, 10.2, 15.13, 15.18(c), and 15.21. In the case of a termination other than in connection with an Event of Default, the terminating Party may also terminate the Agreement by providing the other Party with a Termination Notice. If the Party terminating this Agreement is entitled to a Termination Payment, it shall provide to the other Party along with its Termination Notice, or as soon as practicable after providing the Termination Notice, its calculation in writing of the Termination Payment that it is owed hereunder. If a non-terminating Party is entitled to a Termination Payment in connection with a termination of this Agreement by the terminating Party, it shall provide to the terminating Party as soon as practicable after the termination, its calculation in writing of the Termination Payment that it is owed hereunder. In either case, the calculation of the Termination Payment shall be provided in writing by the Party to which the Termination Payment is owed hereunder to the terminating Party with supporting detail as to the calculation.

11.3 Buyer's Remedies upon Termination prior to the Commercial Operation Date. In the event that Buyer terminates this Agreement due to an Event of Default by Seller occurring prior to the Commercial Operation Date, or this Agreement is terminated prior to the Commercial Operation Date as otherwise provided herein, then Seller's remaining liability to Buyer (except for those obligations surviving termination as described in Section 15.19) shall be a Termination Payment equal to the sum of (i) all Extension Payments due and owing to Buyer by Seller, plus (ii) the liquidated damages owed pursuant to the end of Section 4.2 and/or Section 9.3 (which in the aggregate shall not exceed $270,000.00), plus (iii) all Delay Damages due and owing to Buyer by Seller through the date of such termination, plus (iv) all reasonable costs and expenses (including the reasonable expenses and fees of Buyer's counsel) incurred by Buyer in connection with the Event of Default (as applicable) and/or Buyer's enforcement of this Agreement, plus (v) all other amounts accrued and owing to Buyer from Seller hereunder.

11.4 Buyer's Remedies upon Termination after the Commercial Operation Date.

(a)In the event that Buyer terminates this Agreement due to an Event of Default by Seller occurring on or after the Commercial Operation Date, or this Agreement is terminated after the Commercial Operation Date other than as provided in Section 11.4(b) below, then

ELECTRONICALLY FILED - 2018 June 5 2:20 PM - SCPSC - Docket # 2018-183-E - Page 42 of 70

ELECTRONICALLY FILED - 2018 June 5 2:20 PM - SCPSC - Docket # 2018-183-E - Page 43 of 70

Seller's remaining liability to Buyer (except for those obligations surviving termination as described in Section 15.19) shall be a Termination Payment in the amount of the then-present value (discounted at the prevailing prime rate of interest as published in *The Wall Street Journal* on the day preceding the date of determination) of the cash flows equal to the product of (i) the positive difference (which amount in no event shall be less than fifty percent (50%) of the Net Energy Rate) of the price per kWh for commercially available solar energy from a substantially similar solar photovoltaic facility located in the same state in the same applicable market(s) minus the applicable Net Energy Rate, multiplied by (ii) the number of days remaining in the then Term of the Agreement times the expected daily number of kWh of Net Energy to be delivered during the remainder of the Term (which in no event shall be less than the Contract Quantities required for the remainder of the Term) plus all reasonable costs and expenses (including the reasonable expenses and fees of Buyer's counsel) incurred by Buyer in connection with the Event of Default and with procuring such alternative Net Energy, plus all other amounts accrued and owing to Buyer from Seller hereunder (e.g., overdue Delay Damages, Extension Payments, etc.). In the event that a "substantially similar solar photovoltaic facility located in the same state in the same applicable markets as the Facility" is not reasonably available for consideration, the "price per kWh for commercially available solar energy from a substantially similar solar photovoltaic facility located in the same state in the same applicable markets as the Facility" required above shall be the average of the two price quotes received from two (2) reputable and experienced brokers of solar energy selected by Buyer for such purpose. In each case, factors used in determining such market price may include a comparison of comparable transactions, third party quotations from leading dealers in energy contracts, forward price curves based on economic analysis of the relevant markets, and settlement prices for comparable transactions at liquid trading hubs (e.g., NYMEX). Each broker will be required to provide reasonable detail in writing as to its determination of its price quotation.

(b) In the event this Agreement is terminated after the Commercial Operation Date pursuant to Sections 10.2, 15.18(c), or 15.21 herein, then Seller's remaining liability to Buyer (except for those obligations surviving termination as described in Section 15.19) shall be a Termination Payment equal to the sum of all amounts accrued and owing to Buyer from Seller hereunder (e.g., overdue Delay Damages, Extension Payments, etc.), plus all reasonable costs and expenses (including the reasonable expenses and fees of Buyer's counsel) incurred by Buyer in connection with Buyer's enforcement of this Agreement.

11.5 Seller's Remedies upon Occurrence of a Buyer Default and Termination. In the event that Seller terminates this Agreement due to an Event of Default by Buyer, then Buyer's liability to Seller shall be the Early Termination Fee, plus all reasonable costs and expenses (including the reasonable expenses and fees of Seller's counsel) incurred by Seller in connection with the Event of Default, plus all other amounts then accrued and owing to Seller from Buyer hereunder at termination. Upon termination of the Agreement by Seller due to an Event of Default by Buyer, Seller shall have no future or further obligation to deliver the Net Energy of the Facility to Buyer or to satisfy any other obligation under this Agreement, except for (i) payments or other obligations arising or accruing prior to the effective date of termination, and (ii) its obligations to mitigate the Early Termination Fee,

and those obligations surviving the termination or expiration of this Agreement pursuant to Section 15.19.

11.6 Acceptability of Liquidated Damages. Each Party agrees and acknowledges that (i) the damages that the Parties would incur due to an Event of Default, or other early termination provided for herein, would be difficult or impossible to predict with certainty, and (ii) it is impractical and difficult to assess actual damages in the circumstances stated, and therefore the Termination Payment as agreed to by the Parties and set forth herein is a fair and reasonable calculation of such damages.

11.7 Payment of Termination Payment. The Party owing a Termination Payment hereunder shall make the Termination Payment within fifteen (15) Business Days after the calculation of the Termination Payment, including supporting detail as provided in Section 11.2 above, is delivered to such Party by the Party to which the Termination Payment is owed. If the Party owing the Termination Payment disputes the other Party's calculation of the Termination Payment, in whole or in part, the Party owing the Termination Payment shall, within ten (10) Business Days of receipt of the other Party's calculation of the Termination Payment, provide to such other Party a detailed written explanation of the basis for such dispute; provided, however, if the Seller owes a Termination Payment it shall first transfer Performance Assurance to the Buyer, if applicable, in an amount equal to the Termination Payment calculated by the Buyer. If the Parties are unable to resolve the dispute within thirty (30) days, Article XIV shall apply.

11.8 Use and Return of Performance Assurance. In the event that Seller, as the defaulting Party, fails to pay the Termination Payment in full within the time period set forth in Section 11.7, the Buyer may draw upon any Performance Assurance provided by the Seller hereunder to satisfy the unpaid portion of the Termination Payment. Upon the payment of the Termination Payment in full, any undrawn Performance Assurance shall be promptly returned to the Seller.

11.9 LIMITATION OF LIABILITY. FOR BREACH OF ANY PROVISION OF THIS AGREEMENT FOR WHICH AN EXPRESS REMEDY OR MEASURE OF DAMAGES IS PROVIDED IN THIS AGREEMENT, THE RIGHTS OF THE NON-DEFAULTING PARTY AND THE LIABILITY OF THE DEFAULTING PARTY SHALL BE LIMITED AS SET FORTH IN THIS AGREEMENT, AS THE SOLE AND EXCLUSIVE FULL, AGREED-UPON REMEDY AND LIQUIDATED DAMAGES, AND NOT AS A PENALTY, AND ALL OTHER DAMAGES OR REMEDIES ARE WAIVED. IF NO REMEDY OR MEASURE OF DAMAGES IS EXPRESSLY PROVIDED, OR IF A REMEDY OR MEASURE OF DAMAGES IS EXPRESSLY NONEXCLUSIVE, THE NON-DEFAULTING PARTY SHALL HAVE THE RIGHT TO EXERCISE ALL RIGHTS AND REMEDIES AVAILABLE TO IT AT LAW OR IN EQUITY, PROVIDED, HOWEVER, THAT THE LIABILITY OF THE DEFAULTING PARTY SHALL BE LIMITED TO DIRECT, ACTUAL DAMAGES ONLY AND ALL OTHER DAMAGES AND REMEDIES ARE WAIVED. IN NO EVENT SHALL EITHER PARTY BE LIABLE TO THE OTHER PARTY FOR CONSEQUENTIAL, SPECIAL, INCIDENTAL, PUNITIVE, EXEMPLARY, OR INDIRECT DAMAGES, LOST PROFITS, OR BUSINESS INTERRUPTION DAMAGES, BY STATUTE, IN TORT, CONTRACT, OR OTHERWISE EXCEPT WITH RESPECT TO ANY OF THE FOREGOING DAMAGES THAT ARE INCLUDED IN ANY CLAIM BY A THIRD PARTY FOR

ELECTRONICALLY FILED - 2018 June 5 2:20 PM - SCPSC - Docket # 2018-183-E - Page 44 of 70

WHICH A PARTY IS INDEMNIFIED HEREUNDER. FOR THE AVOIDANCE OF DOUBT, THE CALCULATION OF THE AMOUNT OF A TERMINATION PAYMENT AND AN EARLY TERMINATION FEE HEREUNDER, AS APPLICABLE, ARE DIRECT, ACTUAL DAMAGES.

11.10 Termination for Bankruptcy or Insolvency of Buyer. Notwithstanding anything else herein to the contrary, this Agreement and Buyer's obligations hereunder are contingent upon Buyer's continued financial solvency throughout its Term. The Agreement and Buyer's obligations hereunder shall terminate upon Buyer or an entity that owns or controls Buyer instituting or having instituted against it proceedings under the federal bankruptcy law or other insolvency law; ceasing the conduct of active business; having a receiver appointed for it or its assets or properties; making an assignment for the benefit of creditors; or admitting in writing its inability to pay its debts as they become due. The foregoing shall not constitute an Event of Default. For the avoidance of doubt, upon the occurrence of any of the events triggering termination pursuant to this Section 11.10, Buyer shall have no further obligation to purchase any output (Energy or otherwise) from the Facility.

ARTICLE XII

INDEMNIFICATION

12.1 General. Buyer and Seller shall each be responsible for its own facilities. Buyer and Seller shall each be responsible for ensuring adequate safeguards for third parties, Buyer's and Seller's personnel and equipment and for the protection of its own generating system. Each Party (the "Indemnifying Party") agrees, to the extent permitted by applicable law, to indemnify, pay, defend and hold harmless the other Party (the "Indemnified Party") and its officers, directors, employees, agents and contractors (hereinafter called respectively, "Seller Entities" and "Buyer Entities") from and against any and all claims, demands, costs or expenses for loss, damage, or injury to Persons or property of the Indemnified Party (or to third parties) directly caused by, arising out of, or resulting from:

(a) a breach by the Indemnifying Party of its covenants, representations and warranties or obligations under this Agreement;

(b) any act or omission by the Indemnifying Party or its contractors, agents, servants or employees in connection with the installation or operation of its generating system or the operation thereof in connection with the other Party's system;

(c) any defect in, failure of, or fault related to, the Indemnifying Party's generating system;

(d) the negligence or willful misconduct of the Indemnifying Party or its contractors, agents, servants or employees; or

(e) any other event or act that is the result of, or proximately caused by, the Indemnifying Party or its contractors, agents, servants or employees related to such Party's performance under this Agreement.

ELECTRONICALLY FILED - 2018 June 5 2:20 PM - SCPSC - Docket # 2018-183-E - Page 45 of 70

ELECTRONICALLY FILED - 2018 June 5 2:20 PM - SCPSC - Docket # 2018-183-E - Page 46 of 70

12.2 Claims Settlement. Payment by an Indemnified Party to a third party shall not be a condition precedent to the obligations of the Indemnifying Party under this Article XII. An Indemnified Party which becomes entitled to indemnification under this Article XII shall promptly notify the other Party of any claim or proceeding in respect of which it is to be indemnified. Such notice shall be given as soon as reasonably practicable after the Indemnified Party obligated to give such notice becomes aware of such claim or proceeding. Failure to give such notice shall not excuse an indemnification obligation except to the extent failure to provide notice adversely affects the Indemnifying Party's interests in a material respect. The Indemnifying Party shall assume the defense thereof with counsel designated by the Indemnifying Party; provided, however, that if the defendants in any such action include both the Indemnified Party and the Indemnifying Party and the Indemnified Party reasonably concludes that there may be legal defenses available to it that are different from or additional to, or inconsistent with, those available to the Indemnifying Party, the Indemnified Party shall have the right to select and be represented by separate counsel, at the expense of the Indemnifying Party. If the Indemnifying Party fails to assume the defense of a claim, the indemnification of which is required under this Agreement, the Indemnified Party may, at the expense of the Indemnifying Party, contest, settle, or pay such claim; provided, however, that settlement or full payment of any such claim may be made only with the Indemnifying Party's consent (which shall not be unreasonably withheld or delayed), or absent such consent, written opinion of the Indemnified Party's counsel that such claim is meritorious or warrants settlement. In the event that the Buyer is the indemnified party hereunder, it may draw upon any Performance Assurance to satisfy the unpaid portion of any such indemnity claim. Article XII shall survive termination of this Agreement, as provided in Section 15.19.

ARTICLE XIII

REPRESENTATIONS, WARRANTIES, COVENANTS

13.1 Mutual Representations and Warranties.

(a)Each Party represents and warrants to the other Party that, as of the Effective Date:

(i) it is duly organized or formed, as the case may be, validly existing and in good standing under the laws of the jurisdiction of its organization, incorporation or formation;

(ii) it has the power to execute and deliver this Agreement and to perform its obligations under this Agreement and has taken all necessary corporate, limited liability company, partnership, governmental and/or other actions to authorize such execution and delivery and performance of such obligations;

(iii) its execution and delivery of this Agreement and its performance of its obligations under this Agreement do not violate or conflict with any law applicable to it; with any provision of its charter or bylaws (or comparable constituent documents); with any

order or judgment of any court or other agency of government applicable to it or any of its assets; or with any contractual restriction binding on or affecting it or any of its assets;

(iv) except as provided in Sections 15.17 and 15.18, all authorizations of and exemptions, actions or approvals by, and all notices to or filings with, any Government Agency that are required to have been obtained or made by it at the time this representation is made with respect to this Agreement have been obtained or made and are in full force and effect, and all conditions of any such authorizations, exemptions, actions or approvals have been complied with;

(v) the Party has knowledge of all laws and business practices that must be followed in performing its obligations under this Agreement and the Party is in compliance with all such laws and business practices except to the extent that failure to comply therewith would not, in the aggregate, have a material adverse effect on the other Party; and

(vi) this Agreement constitutes the Party's legal, valid and binding obligation, enforceable against it in accordance with its terms.

(b) Each Party represents and warrants to the other Party that, as of April 30, 2018, and except as disclosed in the Securities and Exchange Commission filings of a Party, its parent company, or any Affiliate of either, or otherwise, there are no actions, suits, proceedings or investigations pending or, to the knowledge of the Party, threatened against it at law or in equity before any court or tribunal of the United States or any other jurisdiction that individually or in the aggregate could result in any materially adverse effect on the Party's business, properties, or assets or its condition, financial or otherwise, that would materially impair its ability to perform its obligations under this Agreement.

13.2 Seller's Representations and Warranties.

(a) Seller represents and warrants to the Buyer that, as of the Effective Date of the Agreement, there are no (i) existing violations of any environmental laws at the Facility, including those governing Hazardous Substances; (ii) to Seller's knowledge (with reasonable diligence), pending, ongoing, or unresolved administrative or enforcement investigations; or (iii) compliance orders, claims, demands, actions, or other litigation brought by a Government Agency(ies) or other third parties alleging violations of any environmental law or permit that would materially and adversely affect the operation of the Facility as contemplated by this Agreement.

(b) Except as provided in Sections 15.1(b) and 15.1(d) below, Seller represents and warrants that the Facility is and will remain throughout the Term of the Agreement free and clear of all liens, claims, encumbrances and third-party rights of any kind other than liens for taxes which are not yet due and payable and otherwise in accordance with Section 15.1(d) below.

(c) Seller represents and warrants to the Buyer that, based on Seller's best knowledge as of the Effective Date of the Agreement, Seller can comply with the Completion Deadline specified in Section 4.2.

ELECTRONICALLY FILED - 2018 June 5 2:20 PM - SCPSC - Docket # 2018-183-E - Page 47 of 70

13.3 No Implied Warranties. Except as expressly set forth in this Agreement, Seller makes no representations or warranties concerning Net Energy delivered under this Agreement. Seller expressly disclaims any implied warranties of merchantability or fitness for a particular purpose.

ARTICLE XIV

DISPUTE RESOLUTION

14.1 General. It is the intent of the Parties that all breaches of this Agreement or disputes arising out of this Agreement shall be resolved in accordance with the dispute resolution procedure set forth in this Article XIV.

14.2 Informal Resolution. If any such breach or dispute arises between the Parties, then either Party may provide written notice thereof to the other Party, which shall include a detailed description of the subject matter of the dispute. Each Party shall promptly designate a senior executive who shall have authority to resolve the dispute through negotiations. The senior executives shall obtain such information as may be necessary to inform themselves of the substance and particulars of the dispute, provided that no document discovery or depositions shall be required during negotiation and any document exchange shall be voluntary. The negotiation and any documents exchanged in connection with the negotiation shall be confidential and considered statements made in compromise negotiations within the meaning of the Federal Rule of Evidence 408 and any applicable state law, evidentiary rules or doctrines. The senior executives shall meet within twenty (20) Business Days of the notice, at a time and place mutually acceptable to the senior executives.

14.3 Binding Arbitration. If the senior executives are unable to resolve the dispute within twenty (20) Business Days of their first meeting or such later date as the senior executives may mutually agree, then the dispute shall be resolved solely and exclusively by binding arbitration. The following arbitration procedures will be used absent agreement of the Parties to different procedures for a given arbitration:

(a) The dispute shall be finally settled by binding arbitration, before a single arbitrator, in accordance with the Commercial Arbitration Rules of the American Arbitration Association ("AAA") then in effect, except as modified herein.

(b) The Party seeking relief from the other Party shall prepare and submit a request for arbitration (the "Demand"), which will include statements of the facts and circumstances surrounding the dispute, the legal obligation breached by the other Party, the amount in controversy and the requested relief.

(c) Arbitration shall be held in Columbia, South Carolina. The arbitration shall be governed by the United States Arbitration Act, 9 U.S.C. §§ 1 et seq.

(d) The arbitrator must be an individual with knowledge and experience in the electric industry, and shall be selected by the Parties or (failing their agreement on an arbitrator) by the AAA in accordance with Rule 11 of the AAA Commercial Arbitration Rules.

ELECTRONICALLY FILED - 2018 June 5 2:20 PM - SCPSC - Docket # 2018-183-E - Page 48 of 70

(e) The award shall be a reasoned opinion in writing and shall set forth findings of facts and conclusions of law. The award shall be final and binding upon the Parties. The arbitrator shall be authorized in its discretion to grant pre-award and post-award interest at commercial rates. Judgment upon any award may be entered in any court having jurisdiction.

(f) This Agreement and the rights and obligations of the Parties shall remain in full force and effect pending the award in any arbitration proceeding hereunder.

(g) Unless otherwise ordered by the arbitrator, each Party shall bear its own costs and fees, including attorneys' fees and expenses. The Parties expressly agree that the arbitrator shall have no power to consider or award any form of damages barred by this Agreement.

(h) This Section shall not prevent either Party from seeking injunctive or other equitable relief as may be needed to prevent irreparable injury pending the award in any arbitration proceeding hereunder.

(i) The Parties agree to request that a selected arbitrator make best reasonable efforts to complete arbitration in a ninety (90) to one hundred twenty (120) daytime period.

ARTICLE XV

MISCELLANEOUS

15.1 Assignment.

(a) Except as provided below, neither this Agreement nor the Facility may be assigned, directly or indirectly, in whole or in part by either Party without the prior written consent of the other Party, which shall not be unreasonably withheld. Notwithstanding the foregoing, Buyer may pledge, encumber, or assign this Agreement, in whole or in part, to any Person (including any Affiliate of Buyer) without any restriction; provided, however that any such assignment by Buyer (other than an assignment to its Affiliate or after which assignment Buyer remains liable hereunder) that gives Seller reasonable grounds for financial insecurity about the ability of Buyer's assignee or successor to perform the obligations of Buyer hereunder shall be subject to the approval of Seller, which shall not be unreasonably withheld.

(b) Notwithstanding anything else herein to the contrary, subject to prior written consent of Buyer, which shall not be unreasonably withheld, Seller may pledge, encumber, or collaterally assign the Facility (subject to the terms of Section 15.1(d) below), this Agreement, in whole or in part, or the revenues under this Agreement to any Financing Party as security for the applicable financing of the construction and operation of the Facility and Seller shall provide prior written notice to Buyer of such pledge, encumbrance or assignment. To facilitate Seller's obtaining of financing for the Facility, Buyer shall use commercially reasonable efforts to provide a simple consent to such pledge, encumbrance or assignment as may be reasonably requested by Seller or any Financing Party in connection

ELECTRONICALLY FILED - 2018 June 5 2:20 PM - SCPSC - Docket # 2018-183-E - Page 49 of 70

with the financing of the Facility; provided that in responding to any such request, Buyer shall have no obligation to (a) provide any writing or statement other than, or in addition to, a simple consent, (b) provide any consent that in such circumstance affects, or could reasonably be expected to have or result in a material effect on, any of Buyer's rights, benefits, risks and/or obligations under this Agreement which is adverse to Buyer, or (c) incur any unreimbursed expense. Seller shall reimburse, or shall cause the Financing Parties to reimburse, Buyer for any and all incremental direct third-party expenses (including the fees and expenses of counsel) incurred by Buyer in the preparation, negotiation, execution and/or delivery of any consent or other documents requested by Seller or the Financing Parties, and provided by Buyer, pursuant to this Section 15.1(b).

(c) Buyer's consent, which shall not be unreasonably withheld, shall be required for any change in Control over Seller.

(d) Notwithstanding anything else herein to the contrary, Seller shall not, by way of security, charge or otherwise, encumber any interest it has in the Facility unless the secured party (for itself, its successors and assigns) agrees to assume Seller's obligations under this Agreement in the event that such security interest in the Facility is executed upon, enforced or foreclosed upon.

(e) Any purported assignment, pledge, or transfer of this Agreement or the Facility not in compliance with the provisions of this Section 15.1 shall be null and void.

(f) Seller agrees to pay Buyer Ten Thousand Dollars ($10,000.00) per occurrence for each and any proposed transaction for which Seller requests Buyer's consent hereunder. If Seller requests Buyer's consent but fails to consummate the transaction, Seller shall reimburse Buyer for any expenses incurred by Buyer up to Ten Thousand Dollars ($10,000.00).

15.2 Notices. Any notice, demand, request, or communication required or authorized by the Agreement shall be delivered either by hand, overnight courier or mailed by certified mail, return receipt requested, with postage prepaid, to:

If to Seller:	Denmark Solar, LLC 1519 King Street Ext Charleston, SC 29405 ATTN: Paul Fleury
With a copy to:	N/A
If to Buyer:	South Carolina Electric & Gas Company 220 Operation Way, Mail Code P-26 Cayce, SC 29033 ATTN: Power Marketing Manager
With a copy to:	South Carolina Electric & Gas Company

ELECTRONICALLY FILED - 2018 June 5 2:20 PM - SCPSC - Docket # 2018-183-E - Page 50 of 70

220 Operation Way, Mail Code D-308
Cayce, SC 29033
ATTN: General Counsel

The designation and titles of the person to be notified or the address of such person may be changed at any time by written notice. Any such notice, demand, request, or communication shall be deemed delivered on receipt if delivered by hand, the next Business Day after deposit by the sending Party if delivered by overnight courier, and on the third Business Day after deposit by the sending Party if delivered by U.S. mail.

15.3 No Third-Party Beneficiary. No provision of the Agreement is intended to, nor shall it in any way inure to the benefit of, any customer, property owner or any other third party, so as to constitute any such Person a third-party beneficiary under the Agreement, or of any one or more of the terms hereof, or otherwise give rise to any cause of action in any Person not a Party hereto.

15.4 No Dedication. No undertaking by one Party to the other under any provision of the Agreement shall constitute the dedication of that Party's system or any portion thereof to the other Party or to the public or affect the status of Buyer as a body public and corporate or Seller as an independent individual or entity and not a public utility.

15.5 Integration; Amendment. The Agreement, together with all Attachments, constitutes the entire agreement between the Parties relating to the transaction described herein and supersedes any and all prior oral or written understandings. No amendment, addition to, or modification of any provision hereof shall be binding upon the Parties, and neither Party shall be deemed to have waived any provision or any remedy available to it unless such amendment, addition, modification or waiver is in writing and signed by a duly authorized officer or representative of the applicable Party or Parties.

15.6 Governing Law. The Agreement is made in the State of South Carolina and shall be interpreted and governed by the laws of the State of South Carolina and/or the laws of the United States, as applicable, without reference to its conflict of laws provisions.

15.7 Relationship of Parties.

(a) The duties, obligations, and liabilities of the Parties are intended to be several and not joint or collective. The Agreement shall not be interpreted or construed to create an association, joint venture, fiduciary relationship or partnership between Seller and Buyer or to impose any partnership obligation or liability or any trust or agency obligation or relationship upon either Party. Seller and Buyer shall not have any right, power, or authority to enter into any agreement or undertaking for, or act on behalf of, or to act as or be an agent or representative of, or to otherwise bind, the other Party.

(b) The relationship between Buyer and Seller shall be that of contracting party to independent contractor. Accordingly, subject to the specific terms of the Agreement, Buyer shall have no general right to prescribe the means by which Seller shall meet its obligations under the Agreement.

(c) Seller shall be solely liable for the payment of all wages, taxes, and other costs related to the employment of persons to perform Seller's obligations under the Agreement, including all federal, state, and local income, social security, payroll, and employment taxes, and statutorily mandated workers' compensation coverage. None of the persons employed by Seller shall be considered employees of Buyer for any purpose; nor shall Seller represent to any Person that he or she is or shall become a Buyer employee, or agent.

15.8 Good Faith and Fair Dealing. The Parties agree to act in accordance with the principles of good faith and fair dealing in the performance of the Agreement.

15.9 Severability. Should any provision of the Agreement be or become void, illegal, or unenforceable, the validity or enforceability of the other provisions of the Agreement shall not be affected and shall continue in force. The Parties will, however, use their reasonable efforts to agree on the replacement of the void, illegal, or unenforceable provision(s) with legally acceptable clauses which correspond as closely as possible to the sense and purpose of the affected provision and the Agreement as a whole.

15.10 Cooperation. The Parties agree to reasonably cooperate with each other in the implementation and performance of the Agreement. Such duty to cooperate shall not require either Party to act in a manner inconsistent with its rights under the Agreement.

15.11 Forward Contract. The Parties acknowledge and agree that this Agreement and the transactions contemplated by this Agreement constitute a "forward contract" within the meaning of the United States Bankruptcy Code and that Seller and Buyer are "forward contract merchants" within the meaning of the United States Bankruptcy Code.

15.12 Assent Not Waiver of Future Breach. No assent, express or implied, by either Party to any breach of the Agreement by the other Party shall be deemed to be a waiver of any subsequent breach.

15.13 Damage to Project. In the event that the Facility is destroyed or substantially damaged by fire, ice, snow, lightning, wind, explosion, aircraft or other vehicular damage, collapse, or other casualty, Seller shall repair or reconstruct the Facility as soon as reasonably possible. If Seller fails to do so within eight (8) months from the date of such damage or destruction, then Buyer may terminate this Agreement by giving thirty (30) days' written notice to Seller, and Seller shall pay a Termination Payment to Buyer, in accordance with Sections 11.3 or 11.4, as applicable, of Article XI (as well as in accordance with those other provisions of Article XI relevant to the calculation and payment of such Termination Payment). Neither Party shall have any further obligation to the other Party under this Agreement except such obligations which have already accrued at termination, and those obligations surviving the termination or expiration of this Agreement as described in Section 15.19.

15.14 Confidentiality. If either Party provides confidential information, including business plans, strategies, financial information, proprietary, patented, licensed, copyrighted or trademarked information, and/or technical information regarding the Facility or the Party's business ("Confidential Information") to the other Party and identifies the same in writing

ELECTRONICALLY FILED - 2018 June 5 2:20 PM - SCPSC - Docket # 2018-183-E - Page 52 of 70

to the receiving Party as provided below, the receiving Party shall (a) protect the Confidential Information from disclosure to third parties with the same degree of care accorded its own confidential and proprietary information, and (b) refrain from using such Confidential Information, except in the negotiation and performance of this Agreement, including but not limited to obtaining financing for the Facility. Notwithstanding the above, a Party may provide such Confidential Information to its officers, directors, members, managers, employees, agents, contractors and consultants (collectively, "Representatives"), and affiliates, lenders, and potential assignees of this Agreement, if any. Each such recipient of Confidential Information shall be informed by the Party disclosing Confidential Information of its confidential nature and shall be directed to treat such information confidentially and shall agree to abide by these provisions. In any event, each Party shall be liable (with respect to the other Party) for any breach of this provision by any entity to whom that Party discloses Confidential Information. The terms of this Agreement (but not its execution or existence) shall be considered Confidential Information for purposes of this Section 15.14, except as set forth in Sections 15.15 and 15.16, and for purposes of sections 15.17 and 15.18. All Confidential Information shall remain the property of the disclosing Party and shall be returned to the disclosing Party or destroyed after the receiving Party's need for it has expired or upon the request of the disclosing Party (except that the receiving Party may keep a copy of the same as required by law). Each Party agrees that the disclosing Party would be irreparably injured by a breach of this Section 15.14 by the receiving Party or its Representatives or other person to whom the receiving Party discloses Confidential Information of the disclosing Party and that the disclosing Party may be entitled to equitable relief, including injunctive relief and specific performance, in the event of a breach of the provision of this Section 15.14. To the fullest extent permitted by applicable law, such remedies shall not be deemed to be the exclusive remedies for a breach of this Section 15.14, but shall be in addition to all other remedies available at law or in equity. The terms of this Section 15.14 shall control over the provisions of any previous Confidentiality Agreement executed by and between the Parties with regard to the subject matter hereof.

15.15 Permitted Disclosures. Notwithstanding any other provision in this Agreement to the contrary, neither Party shall be required to hold confidential any information that (i) becomes publicly available other than through unlawful acts of the receiving Party, (ii) is required to be disclosed to a Government Agency under applicable law or pursuant to a validly issued subpoena, (iii) is independently developed by the receiving Party or (iv) becomes available to the receiving Party without restriction from a third party under no obligation of confidentiality. If disclosure of information is required by a Government Agency, the disclosing Party shall, to the extent permitted by applicable law, notify the other Party of such required disclosure promptly upon becoming aware of such required disclosure and shall reasonably cooperate with the other Party in efforts to limit the disclosure to the maximum extent permitted by law. In addition, notwithstanding anything else herein to the contrary, nothing herein shall prohibit Buyer from disclosing any information (whether or not Confidential Information) to any Federal and state regulators.

15.16 Goodwill and Publicity. Except as otherwise provided herein, neither Party shall use any name, trade name, service mark or trademark of the other Party in any promotional or advertising material without the prior written consent of such other Party. The Parties shall

ELECTRONICALLY FILED - 2018 June 5 2:20 PM - SCPSC - Docket # 2018-183-E - Page 53 of 70

ELECTRONICALLY FILED - 2018 June 5 2:20 PM - SCPSC - Docket # 2018-183-E - Page 54 of 70

coordinate and cooperate with each other when making prepared public announcements related to the execution and existence of this Agreement, and the construction and operation of the Facility, and each Party shall have the right to promptly review and comment upon, and approve (which shall not be unreasonably denied or delayed) any publicity materials by the other Party that refer to, or that describe any aspect of, this Agreement or the Facility. Neither Party shall make any press release or prepared public announcement of the specific terms of this Agreement (except for filings or other statements or releases as may be required by applicable law) without the specific prior written consent of the other Party which shall be in the discretion of such Party. Without limiting the generality of the foregoing, all prepared public statements must accurately reflect the rights and obligations of the Parties under this Agreement.

15.17 Filing Agreement with the Public Service Commission of South Carolina. This Agreement is required to be filed by Buyer with the SCPSC within ten (10) days of its execution. Buyer and Seller understand and agree that, for purposes of this filing, this Agreement will be filed with the SCPSC in unredacted form. Buyer shall use commercially reasonable efforts to satisfy such filing requirement and shall provide Seller with written notice promptly following the satisfaction of such filing requirement.

15.18 Review by SCPSC. This Agreement is subject to review by the SCPSC upon complaint by either Party, or pursuant to its own motion, and the terms herein may be modified in whole or in part or declared null and void by the SCPSC.

(a) Provision of Information to the SCPSC. Buyer reserves the right to provide to the SCPSC, upon request, information pertaining to this Agreement including, but not limited to records of the Facility's generation output and Buyer's purchases thereof, including copies of monthly statements of power purchases and data from meters and telemetering equipment installed at the Facility. Buyer will advise Seller of the furnishing of any information.

(b) Cooperation with the SCPSC. Buyer and Seller agree to work together in good faith to support the filing of this Agreement with the SCPSC, including providing response to any information requests, data requests, and/or requests for interviews, and participation in any investigation, hearing, and/or appeal, as applicable.

(c) Termination. In the event that the SCPSC issues an order or other such regulatory directive with modification, suspension, investigation or other condition that has an adverse effect on either Party, then the Parties agree to negotiate in good faith for a period of thirty (30) days an amendment to this Agreement that complies with such SCPSC order or directive. If the Parties cannot reach an agreement, either Party may terminate this Agreement upon ten (10) days prior written notice to the other Party and neither Party shall have any obligation, duty or liability to the other arising hereunder under any claim or theory whatsoever except as to costs and balances, any other obligations incurred or accrued prior to the effective date of such termination, and those obligations surviving termination or expiration of this Agreement as described in Section 15.19.

15.19 Survival. The termination of this Agreement shall not discharge any Party from any obligation it owes to the other Party hereunder by reason of any transaction, cost, loss, damage, expense or liability which shall occur or arise (or the circumstances, events or bases which shall occur or arise) prior to or as a consequence of such termination. It is the intent of the Parties hereby that any obligation owed (whether the same shall be known or unknown at the termination of this Agreement or whether the circumstances, events or bases of the same shall be known or unknown at the termination of this Agreement), including, but not limited to, an indemnification obligation arising under Section 12.1 from circumstances occurring prior to termination but not known at termination, will survive the termination of this Agreement. In addition, the provisions within Articles XI, XII, XIV, and XV (and any provisions or definitions referenced therein necessary to the administration of such Articles) shall survive the termination of this Agreement. In addition, for twenty-four (24) months after the expiration or termination of this Agreement, all audit rights of Buyer herein shall survive such termination and expiration of this Agreement. Seller shall retain any and all documents (including, without limitation, paper, written, and electronic) and/or any other records relating to this Agreement and the Facility for a period of twenty-four (24) months after the termination or expiration of this Agreement.

15.20 Limitation of Duty to Buy. If this Agreement is terminated for any reason other than a default by Buyer, neither Seller nor any Affiliate and/or successor of Seller, nor any Affiliate and/or successor of Seller to the Facility, including, without limitation, ownership and/or operation of the Facility, will require or seek to require Buyer to purchase any output (Energy or otherwise) from the Facility under any applicable law (including without limitation PURPA) or otherwise at a price higher than the Net Energy Rate set forth in Attachment B for any period that would have been covered by the Term of this Agreement had this Agreement remained in effect. Seller, on behalf of itself and on behalf of any other Person on whose behalf it may act, and on behalf of any successor to Seller or successor to the Facility, hereby agrees to the terms and conditions in the above sentences, and hereby waives any right it may have to dispute the above sentence.

15.21 Change in Law.

(1) Regulatory Event. A "Regulatory Event" means one or more of the following events:

(i) Illegality. After the Effective Date, due to the adoption of, or change in, any applicable law or in the interpretation thereof by any Government Agency with competent jurisdiction, it becomes unlawful for a Party to perform any obligation under this Agreement.

(ii) Adverse Government Action. After the Effective Date, there occurs any adverse change in any applicable law (including a change regarding a Party's obligation to sell, deliver, purchase, or receive the Net Energy) and any such occurrence renders illegal or unenforceable any performance or requirement under this Agreement.

ELECTRONICALLY FILED - 2018 June 5 2:20 PM - SCPSC - Docket # 2018-183-E - Page 55 of 70

(2) Process. Upon the occurrence of a Regulatory Event the Party affected by the Regulatory Event shall notify the other Party in writing of the occurrence of a Regulatory Event, together with details and explanation supporting the occurrence of a Regulatory Event. Upon receipt of such notice, the Parties agree to undertake, during the thirty (30) days immediately following receipt of the notice, to negotiate such modifications to reform this Agreement to remedy the Regulatory Event and attempt to give effect to the original intention of the Parties. Upon the expiration of the 30-day period, if the Parties are unable to agree upon modifications to the Agreement that are acceptable to each Party, in each Party's sole discretion, then either Party will have the right, in such Party's sole discretion, to terminate this Agreement with a 30-day advance written notice. In the event of any termination pursuant to this Section, neither Party shall have any obligation, duty or liability to the other arising hereunder under any claim or theory whatsoever except as to costs and balances, any other obligations incurred or accrued prior to the effective date of such termination, and those obligations surviving termination or expiration of this Agreement as described in Section 15.19.

15.22 Mobile-Sierra. Notwithstanding any provision of this Agreement, neither Party shall seek, nor shall they support any third party in seeking, to prospectively or retroactively revise the rates, terms or conditions of service of this Agreement through application or complaint to FERC pursuant to the provisions of Section 205, 206 or 306 of the Federal Power Act, or any other provisions of the Federal Power Act, absent prior written agreement of the Parties. Further, absent the prior agreement in writing by both Parties, the standard of review for changes to the rates, terms or conditions of this Agreement proposed by a Party, a non-party or the FERC acting sua sponte shall be the "public interest" application of the "just and reasonable" standard of review set forth in United Gas Pipe Line Co. v. Mobile Gas Service Corp., 350 U.S. 332 (1956) and Federal Power Commission v. Sierra Pacific Power Co., 350 U.S. 348 (1956), and clarified by Morgan Stanley Capital Group, Inc. v. Public Util. Dist. No. 1 of Snohomish, 554 U.S. 527 (2008).

15.23 Construction Safety and Health Training. Seller shall comply with all applicable health and safety rules and regulations and shall be liable for any and all claims that may arise.

[Signature Page Follows]

ELECTRONICALLY FILED - 2018 June 5 2:20 PM - SCPSC - Docket # 2018-183-E - Page 56 of 70

IN WITNESS WHEREOF, the Parties have caused the Agreement to be duly executed as of the day and year first above written.

Seller:

Denmark Solar, LLC
a South Carolina limited liability company

By:_____

Name: Paul Fleury

Title: President

Buyer:

South Carolina Electric & Gas Company,
a South Carolina corporation

By:_____

Name: Daniel F. Kassis

Title: Vice President, Customer Relations & Renewables

ELECTRONICALLY FILED - 2018 June 5 2:20 PM - SCPSC - Docket # 2018-183-E - Page 57 of 70

ELECTRONICALLY FILED - 2018 June 5 2:20 PM - SCPSC - Docket # 2018-183-E - Page 58 of 70

ATTACHMENT A – Description of Facility

ATTACHMENT B – Schedule of Rates

ATTACHMENT C – Net Energy Delivery Requirements

ATTACHMENT D – Insurance Requirements

ATTACHMENT E – VIE CERTIFICATION

ELECTRONICALLY FILED - 2018 June 5 2:20 PM - SCPSC - Docket # 2018-183-E - Page 59 of 70

ATTACHMENT A

Description of Facility

1. Site

See Exhibit A and Single-Line Drawing provided.

2. Structure

Single Axis Tracking with crystalline silicone modules.

3. Equipment

(i) Solar Power Plant Design: see approved One Line

(ii) Technology: see approved One Line

(iii) Solar Power Plant Size (Capacity): 6.0 MW-AC

(iv) Estimated Yr-1 Production: 14,378,000 kWh

(v) Module: Crystalline Silicone Modules

(vi) Inverter: Schneider Electric 2,000 SmartGen PCS SKID

(vii) Monitoring/Data Logging: Details provided to Buyer Three (3) months before Commercial Operation Date

(viii) Operating Voltage(kV): 12.47 kV at the Point of Interconnection as specified in the Interconnection Agreement

(ix) Project Controls: Details provided to Buyer Three (3) months before Commercial Operation Date

4. Interconnection

Interconnection Agreement fully executed October 25, 2017

5. Facility Security

Details provided to Buyer Three (3) months before Commercial Operation Date

6. Metering

Utility Meter provided by SCE&G.

EXECUTION VERSION

Exhibit A

ANSI-D 34"x22" "THIS DOCUMENT CONTAINS INTELLECTUAL, DESIGN, OR COPY WRITE PROPERTY OF SOUTHERN CURRENT LLC WHICH IS PRIVILEGED OR CONFIDENTIAL AND IS NOT TO BE REPRODUCED, DISCLOSED, USED IN ANY MANNER OR DISTRIBUTED WITHOUT WRITTEN PERMISSION OF SOUTHERN CURRENT LLC" ANSI-D 34"x22"

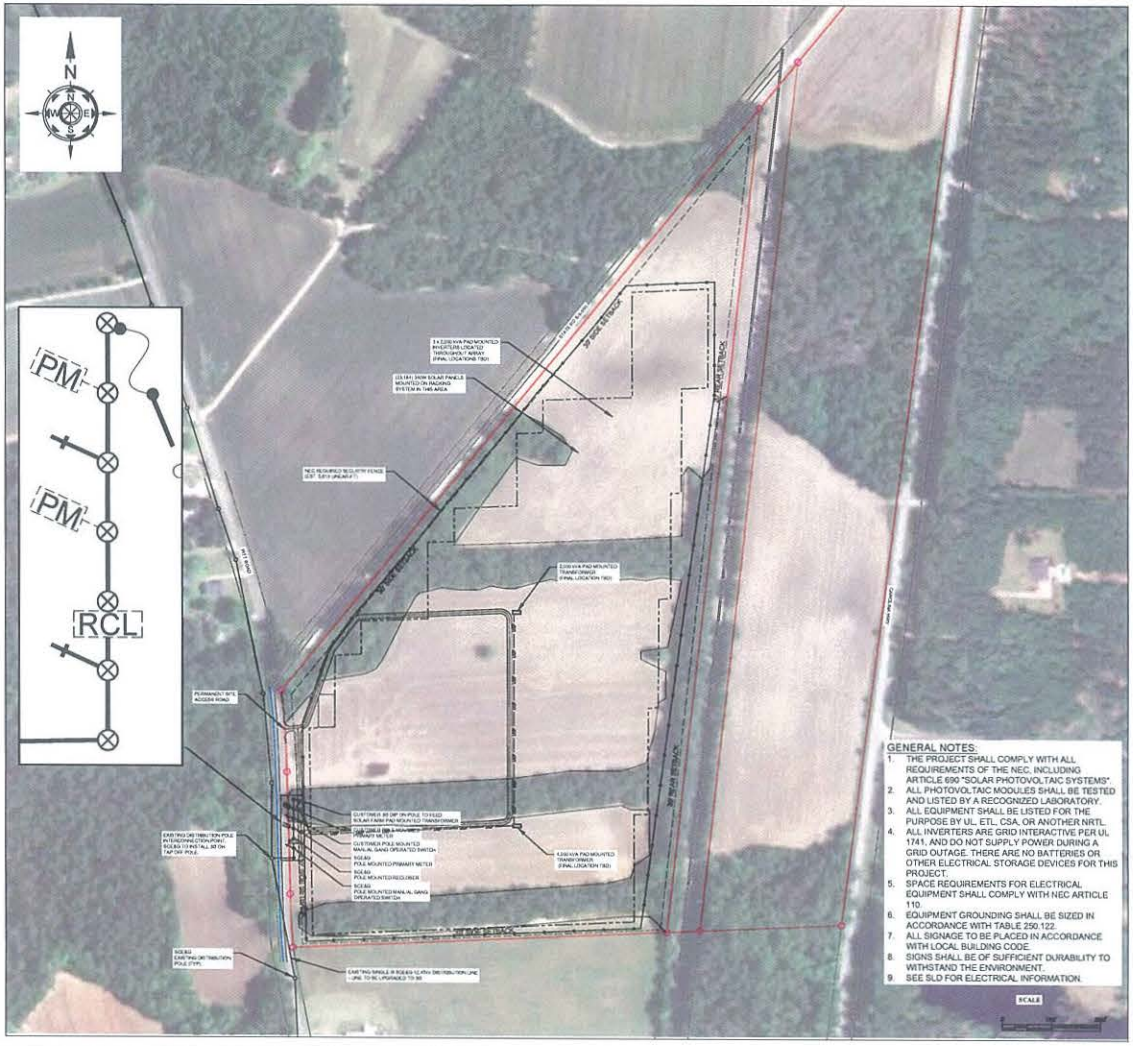

GENERAL NOTES:

1. THE PROJECT SHALL COMPLY WITH ALL REQUIREMENTS OF THE NEC, INCLUDING ARTICLE 690 "SOLAR PHOTOVOLTAIC SYSTEMS".
2. ALL PHOTOVOLTAIC MODULES SHALL BE TESTED AND LISTED BY A RECOGNIZED LABORATORY.
3. ALL EQUIPMENT SHALL BE LISTED FOR THE PURPOSE BY UL, ETL, CSA, OR ANOTHER NRTL.
4. ALL INVERTERS ARE GRID INTERACTIVE PER UL 1741, AND DO NOT SUPPLY POWER DURING A GRID OUTAGE. THERE ARE NO BATTERIES OR OTHER ELECTRICAL STORAGE DEVICES FOR THIS PROJECT.
5. SPACE REQUIREMENTS FOR ELECTRICAL EQUIPMENT SHALL COMPLY WITH NEC ARTICLE 110.
6. EQUIPMENT GROUNDING SHALL BE SIZED IN ACCORDANCE WITH TABLE 250.122.
7. ALL SIGNAGE TO BE PLACED IN ACCORDANCE WITH LOCAL BUILDING CODE.
8. SIGNS SHALL BE OF SUFFICIENT DURABILITY TO WITHSTAND THE ENVIRONMENT.
9. SEE SLD FOR ELECTRICAL INFORMATION.

LEGEND

- PROPERTY LINE
- FENCE LINE
- SOLAR AREA LINE
- AREA ALREADY CLEARED OR WILL BE CLEARED PRIOR TO INSTALLATION

ELECTRIC DISTRIBUTION SYMBOLS

PM	PRIMARY METER		EXISTING POLE
RCL	RECLOSER		INSTALL POLE
	CUTOUT		GANG SWITCH

SOLAR PV SYSTEM OVERVIEW

Module Name:	340W
(#) of Modules:	23,184
(#) Modules in Series:	28
(#) of Strings:	828
Inverter Name:	Schneider Electric 2,000 SmartCom PCS SKID
(#) of Inverters:	3
System Size (DC):	7.88 MW
System Size (AC):	6.00 MVA
System Size (AC):	6.00 MW

SOUTHERN CURRENT
1634 Ashley River Road
Charleston, S.C. 29407

DENMARK SOLAR, LLC
33°20'46.34" N 81°08'34.18" W
Denmark, SC
6 MW AC Ground Mount
UTILITY SITE PLAN

PE STAMP: SOUTH CAROLINA PROFESSIONAL ENGINEER No. 29008 DAVID E. BRUECK

ENGINEER: David Brueck, P.E.
SC LICENSE # 29008
Certified NABCEP
PV Installer # 042013-17

DRAFTER: Sean Taylor
PROJECT #: D-2016-01
SHEET: 001
24"x22" PAPER SIZE
SCALE: 1"=150'

NO.	DATE	BY	REVISION DESCRIPTION	APRV'D
1	10/27/2017	S.TAYLOR	UTILITY SITE PLAN	

ANSI-D 34"x22" "THIS DOCUMENT CONTAINS INTELLECTUAL, DESIGN, OR COPY WRITE PROPERTY OF SOUTHERN CURRENT LLC WHICH IS PRIVILEGED OR CONFIDENTIAL AND IS NOT TO BE REPRODUCED, DISCLOSED, USED IN ANY MANNER OR DISTRIBUTED WITHOUT WRITTEN PERMISSION OF SOUTHERN CURRENT LLC" ANSI-D 34"x22"

Single-Line Drawing

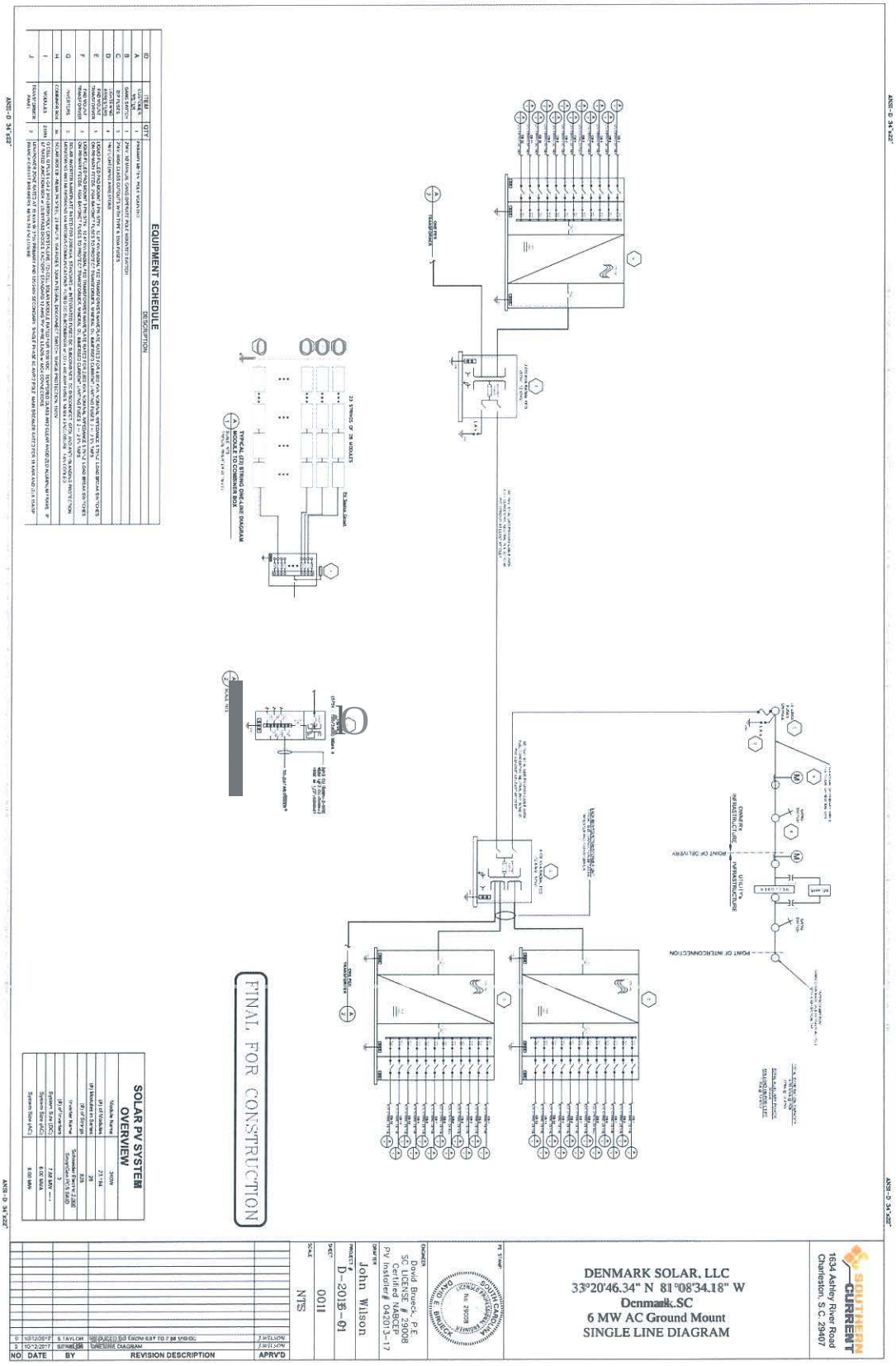

ELECTRONICALLY FILED - 2018 June 5 2:20 PM - SCPSC - Docket # 2018-183-E - Page 62 of 70

ATTACHMENT B

Schedule of Rates

Net Energy Rate

Beginning on the Commercial Operation Date and continuing through the end of the Initial Term, Buyer shall pay Seller the following rates per kWh ("Net Energy Rate") for Net Energy delivered by the Seller to Buyer at the Delivery Point. For each applicable hour, the Net Energy Rate is comprised of the applicable Energy Rate below plus the applicable Capacity Rate below. These rates shall be applied to the hourly integrated values for Net Energy delivered, rounded to the nearest whole kWh.

Energy Rate (per kWh):

For Energy Delivered During the Following Calendar Years	Summer Months On-Peak Hours $/kWh	Summer Months Off-Peak Hours $/kWh	Winter Months On-Peak Hours $/kWh	Winter Months Off-Peak Hours $/kWh
2018-2021	0.03384	0.02845	0.03483	0.03170
2022-2026	0.03648	0.02679	0.03200	0.02726
2027 & Beyond	0.04070	0.03040	0.03587	0.02935

Determination of On-Peak and Off-Peak Hours

1. On-Peak Hours during the summer months of June through September are defined as the hours between 10:00 a.m. and 10:00 p.m., Monday through Friday.

2. On-Peak Hours during the winter months of November through April are defined as the hours between 6:00 a.m. and 1:00 p.m. and 5:00 p.m. through 10:00 p.m., Monday through Friday.

3. On-Peak Hours during the winter months of October and May are defined as the hours between 10:00 a.m. and 10:00 p.m., Monday through Friday.

4. Off-Peak Hours in any month are defined as all hours not specified as on-peak hours.

ELECTRONICALLY FILED - 2018 June 5 2:20 PM - SCPSC - Docket # 2018-183-E - Page 63 of 70

Capacity Rate (per kWh):

For Net Energy delivered to SCE&G's system during Critical Peak Hours only:

Summer Months (June – August) $/kWh	Winter Months (December – February) $/kWh
$0.01965	$0.00675

Determination of Critical Peak Hours:

For the Summer Months of June - August:
The Critical Peak Hours are defined as the hours between 2:00 p.m. - 6:00 p.m., Monday - Friday.

For the Winter Months of December - February:
The Critical Peak Hours are defined as the hours between 6:00 a.m. - 9:00 a.m., Monday - Friday.

The Net Energy Rate per kWh contained herein will be effective until the end of the Term of this Agreement.

Test Energy Rate

Prior to the Commercial Operation Date, Buyer shall pay Seller the following rates per kWh ("Test Energy Rate") for Test Energy delivered by the Seller to Buyer at the Delivery Point. These rates shall be applied to the hourly integrated values for Net Energy delivered, rounded to the nearest whole kWh.

Test Energy Rate (per kWh):

For Energy Delivered During the Following Calendar Years	Summer Months On-Peak Hours $/kWh	Summer Months Off-Peak Hours $/kWh	Winter Months On-Peak Hours $/kWh	Winter Months Off-Peak Hours $/kWh
2018 - 2021	0.03384	0.02845	0.03483	0.03170
2022	0.03648	0.02679	0.03200	0.02726

Determination of On-Peak and Off-Peak Hours

1. On-Peak Hours during the summer months of June through September are defined as the hours between 10:00 a.m. and 10:00 p.m., Monday through Friday.

2. On-Peak Hours during the winter months of November through April are defined as the hours between 6:00 a.m. and 1:00 p.m. and 5:00 p.m. through 10:00 p.m., Monday through Friday.

3. On-Peak Hours during the winter months of October and May are defined as the hours between 10:00 a.m. and 10:00 p.m., Monday through Friday.

4. Off-Peak Hours in any month are defined as all hours not specified as on-peak hours.

Seller Charge:

Seller shall pay the following Seller Charge each monthly billing period: $45.00

Rates for the Additional Term, if elected by Seller pursuant to Section 3.1(a), will be derived from SCE&G's Rate PR-2 (or subsequent approved solar QF rate) in effect at the time the Additional Term Notice is received by Buyer.

ELECTRONICALLY FILED - 2018 June 5 2:20 PM - SCPSC - Docket # 2018-183-E - Page 64 of 70

ELECTRONICALLY FILED - 2018 June 5 2:20 PM - SCPSC - Docket # 2018-183-E - Page 65 of 70

ATTACHMENT C

Net Energy Delivery Requirements

Initial Term

Contract Year	Contract Quantity Net Energy (kWh)
1*	TBD
2	14,306,110
3	14,234,579
4	14,163,407
5	14,092,590
6	14,022,127
7	13,952,016
8	13,882,256
9	13,812,845
10	13,743,780
11*	TBD

*For the Initial Term, the quantities for Contract Year 1 and Contract Year 11 are pro-rated as required, pursuant to Section 3.5, to reflect a partial Calendar Year.

Additional Term

Contract Year	Contract Quantity Net Energy (kWh)
11*	TBD
12	13,606,686
13	13,538,653
14	13,470,959
15	13,403,605
16*	TBD

*For the Additional Term, the quantities for the remaining portion of Contract Year 11 and Contract Year 16 are pro-rated as required, pursuant to Section 3.5, to reflect a partial Calendar Year.

ELECTRONICALLY FILED - 2018 June 5 2:20 PM - SCPSC - Docket # 2018-183-E - Page 66 of 70

ATTACHMENT D

Insurance Requirements

1. Policy Type. The Seller will procure or cause to be procured and will maintain throughout the entire Term of this Agreement, a policy or policies of liability insurance issued by an insurer acceptable to Buyer on a standard "Insurance Services Office" commercial general liability form (such policy or policies, collectively, the "Seller's Insurance"). A certificate of insurance shall be delivered to Buyer at least fifteen (15) calendar days prior to the start of any work at the Facility. At a minimum, Seller's Insurance shall contain (a) an endorsement providing coverage, including products liability/completed operations coverage for the Term of this Agreement, and (b) a broad form contractual liability endorsement covering liabilities (i) that might arise under this Agreement or (ii) caused by operation of the Facility or any of Seller's equipment in satisfactory and safe operating condition. Without limiting the foregoing, Seller's Insurance must be reasonably acceptable to Buyer. Any premium assessment or deductible shall be for the account of Seller and not Buyer.

2. Policy Minimum Limits. Seller's General Liability Insurance shall have a minimum limit of One Million Dollars ($1,000,000) per occurrence and Two Million Dollars ($2,000,000) aggregate, combined single limit, for bodily injury (including death) or property damage.

3. Policy Effective Date. To the extent that Seller's Insurance is on a "claims made" basis, the retroactive date of the policy(ies) shall be the Effective Date of this Agreement or such other date as may be agreed upon to protect the interests of Seller and Buyer. Furthermore, to the extent that Seller's Insurance is on a "claims made" basis, the Seller's duty to provide insurance coverage shall survive the termination of this Agreement until the expiration of the maximum statutory period of limitations in the State of South Carolina for actions based in contract or in tort. To the extent the Seller's Insurance is on an "occurrence" basis, such insurance shall be maintained in effect at all times by the Seller during the Term of this Agreement.

4. Seller must maintain Workers' Compensation insurance regardless of statutory requirements as outlined below:

(a) Workers' Compensation – Statutory Limits
(b) Employer's Liability - $1,000,000
(c) "All-States" endorsement required

5. The Seller must provide Environmental Impairment insurance with minimum limits of $1,000,000 per occurrence.

6. Policy Cancellation or Alteration. Seller's Insurance shall provide that it may not be cancelled or materially altered without prior written notice per the policy terms and

conditions to Buyer. The Seller shall provide Buyer with a copy of any material communication or notice related to the Seller's Insurance within ten (10) Business Days of the Seller's receipt or issuance thereof.

7. Additional Insured. Except for Workers' Compensation coverage, the Seller shall be designated as the named insured and "SCANA Corporation and its subsidiaries" shall be designated as an additional insured on all of Seller's insurance policies. The Seller's insurance policies shall be endorsed to be primary and non-contributory to any coverage maintained by Buyer.

8. All insurance shall be with sound insurance companies which have an A.M. Best rating of A-VII as the minimum and are authorized to do business in the state where the work is performed.

9. Neither a failure of the Seller to provide the required certificate of insurance nor Seller's submission of a certificate of insurance not in conformance with the insurance requirements stated herein shall relieve the Seller from the obligation to have in force the required insurance coverages.

10. None of Seller's insurance policies shall have any "other insurance" clause or language which would jeopardize the primacy of Seller's insurance with respect to Buyer's self-insured retention or excess insurance policies.

11. None of Seller's personnel shall be deemed for any purpose to be solely or dually employed by the Buyer. If any employee of the Seller shall recover benefits under Buyer's Workers' Compensation as a result of injury or disease sustained in, or Unemployment Insurance coverage resulting from, performing work under the Contract while on Seller's payroll, Seller shall reimburse Buyer for the full amount of such benefits and any cost or expenses incurred by Buyer related thereto.

12. Buyer shall accept, in connection with the Contract, the provisions of all the workers' compensation laws of the state in which the work is performed and any re-enactments and supplements thereto. In addition, Buyer shall maintain workers' compensation coverage for all Buyer's employees performing the work, regardless of whether required to do so by state law.

ELECTRONICALLY FILED - 2018 June 5 2:20 PM - SCPSC - Docket # 2018-183-E - Page 67 of 70

ATTACHMENT E

CERTIFICATION OF WHETHER THE AGREEMENT WILL REQUIRE DECONSOLIDATION BY SELLER WITH RESPECT TO VARIABLE INTEREST ENTITY

AGREEMENT – Power Purchase Agreement, dated ____ __, 20_ between South Carolina Electric & Gas Company ("Buyer"), and _____ ("Seller") (the "Agreement"). Capitalized terms used herein will have the meaning assigned in the Agreement.

The undersigned individual, being the Chief Financial Officer of Seller[1] and having responsibilities for financial accounting matters associated with the Agreement, hereby certifies that the Agreement WILL (____)/WILL NOT (____) require Seller, based on U.S. Generally Accepting Accounting Principles in effect as of the date of this certificate, to deconsolidate on its books and records any assets, liabilities, cash flow, profits or losses of Seller as a result of Buyer being determined to be the Primary Beneficiary. My determination of the most likely accounting treatment of this transaction results from my personal consideration after necessary discussions with relevant officers of Accounting Standards Codification ("ASC") Topic 810, Consolidation, and the following factual matters:

1) Seller's accounting policies, procedures, and internal controls are sufficient to provide Buyer with an appropriate basis for confirming the information contained herein.

   _____Yes
   _____No (please explain)

   *Explain:*_____
   _____
   _____

2) Seller qualifies for one of the scope exceptions listed in paragraphs 810-10-15-12 and 810-10-15-17 of ASC Topic 810. Please explain.

   _____Yes
   _____No

   *Explain:*_____
   _____
   _____

3) Seller is financed with equity equal to or greater than ten percent (10%) of Seller's total assets per paragraphs 810-10-25-45 to 47 of ASC Topic 810.

[1] If Seller's business structure does not designate an officer with this or a similar title, Seller must provide written documentation affirming the authority of the individual who attests to this certification.

ELECTRONICALLY FILED - 2018 June 5 2:20 PM - SCPSC - Docket # 2018-183-E - Page 68 of 70

_____ Yes
_____ No

4) The Agreement revenues correlate with fluctuations in Seller's operating cash flows (operating expenses). Please explain.

_____ Yes
_____ No

Explain: _____

5) The Agreement reduces variability in the fair value of Seller's assets, for example by absorbing fuel or electricity price risk. Please explain.

_____ Yes
_____ No

Explain: _____

6) The Agreement Term is for greater than 50% of the remaining economic life of the unit.

_____ Yes
_____ No

7) The Agreement is for substantially all of the proposed Facility's productive output.

_____ Yes
_____ No

8) Buyer and/or its Affiliates participated significantly in the design or redesign of the Facility.

_____ Yes
_____ No

9) The percentage that the Facility's fair value represents, of the fair value of the proposed Seller's total assets, is approximately;

ELECTRONICALLY FILED - 2018 June 5 2:20 PM - SCPSC - Docket # 2018-183-E - Page 69 of 70

_____%

10) The Facility is essentially the only source of payment for specified liabilities or specified other interest (there is specific debt associated with the Facility).

_____Yes
_____No

Confirmation

The above information (and any attachment) has been completed in **full** and agrees with Seller's records as of the date hereof.

By: _____

Title: _____

Company: _____

Date: _____

ELECTRONICALLY FILED - 2018 June 5 2:20 PM - SCPSC - Docket # 2018-183-E - Page 70 of 70