BELLSOUTH® / CLEC Agreement

Customer Name: AT&T Communications of the Southern States, LLC

AT&T Communications of the Southern States, LLC South Carolina	2
General Terms & Conditions	3
Signature Page	40
General Terms & Conditions Exhibit A Disaster Recovery	41
Attachment 1 Resale	51
Attachment 1 Rates	77
Attachment 2 Network Elements and Other Services	78
Attachment 2 Exhibit A Rates	153
Attachment 2 Exhibit B Rates	168
Attachment 3 Local Interconnection	171
Attachment 3 Rates	218
Attachment 4 Collocation SC	220
Attachment 4 Collocation Remote Site	264
Attachment 4 Rates	296
Attachment 5 Access to Numbers and Number Portability	301
Attachment 6 Access to Operations Support Systems	307
Attachment 7 Connectivity Billing and Recording	318
Attachment 8 Rights of Way	337
Attachment 9 Service Quality Measurements	377
Attachment 10 Bona Fide Request and New Business Request	379
Attachment 11 Network Security	385
Attachment 12 Acronyms	387

Note: This page is not part of the actual signed contract/amendment, but is present for record keeping purposes only.

By and Between

BellSouth Telecommunications, Inc.

And

AT&T Communications of the Southern States, LLC

AGREEMENT

between

BellSouth Telecommunications, Inc.

and

AT&T Communications of the Southern States, LLC

South Carolina

TABLE OF CONTENTS

Section **Page**

AGREEMENT 4

PREFACE 4

RECITALS 4

DEFINITIONS and ACRONYMS 4

GENERAL TERMS AND CONDITIONS 4

1. Provision of Local Service and Unbundled Network Elements 5

2. Term of Agreement 5

3. Termination of Agreement; Transitional Support 6

4. Good Faith Performance 7

5. Option to Obtain Services and Elements and Combinations Under Other Agreements 7

6. Responsibility of Each Party 7

7. Governmental Compliance 8

8. Responsibility For Environmental Contamination 8

9. Regulatory Matters 10

10. Liability and Indemnity 11

11. Intellectual Property Rights and Indemnification 14

12. Audits and Inspections 17

13. Performance Measurement 19

14. Force Majeure 19

15. Certain Federal, State and Local Taxes 20

16. Dispute Resolution Process 24

17. Notices 24

18. Confidentiality and Proprietary Information 25

19. Branding 27

20. Directory Listings Requirements 28

21. Insurance Requirements 30

22. Costs 32

23. Disaster Recovery 32

24. Miscellaneous 34

25. Reservation of Rights 37

ATTACHMENTS

Attachment 1 Resale
Attachment 2 Unbundled Network Elements
Attachment 3 Local Interconnection
Attachment 4 Collocation
Attachment 5 Access to Numbers and Number Portability
Attachment 6 Access To Operations Support Systems (OSS)
Attachment 7 Connectivity Billing and Recording
Attachment 8 Rights of Way (ROW), Conduits, and Pole Attachments
Attachment 9 Performance Measures
Attachment 10 Bona Fide Request/New Business Request Process
Attachment 11 Network Security
Attachment 12 Acronyms

Exhibit A Disaster Recovery

AGREEMENT

PREFACE

This Agreement, which shall become effective as of the 14th day of March, 2006, is entered into by and between AT&T Communications of the Southern States, LLC, a Delaware corporation, having an office at 1230 Peachtree Street, N.E., Atlanta, Georgia, 30309, on behalf of itself and its Affiliates (individually and collectively "AT&T"), and BellSouth Telecommunications, Inc. ("BellSouth"), a Georgia corporation, having an office at 675 West Peachtree Street, Atlanta, Georgia 30375, on behalf of itself and its successors and assigns.

RECITALS

WHEREAS, the Telecommunications Act of 1996 (the "Act") was signed into law on February 8, 1996; and

WHEREAS, the Act places certain duties and obligations upon, and grants certain rights to Telecommunications Carriers; and

WHEREAS, BellSouth is an Incumbent Local Exchange Carrier; and

WHEREAS, AT&T is a Telecommunications Carrier and has requested that BellSouth negotiate an Agreement pursuant to sections 251 and 252 of the Act,

NOW, THEREFORE, in consideration of the promises and the mutual covenants of this Agreement, AT&T and BellSouth hereby agree as follows:

DEFINITIONS and ACRONYMS

For purposes of this Agreement, certain terms have been defined in the body of the Agreement to encompass meanings that may differ from, or be in addition to, the normal connotation of the defined word. Unless the context clearly indicates otherwise, any term defined or used in the singular shall include the plural. The words "shall" and "will" are used interchangeably throughout this Agreement and the use of either connotes a mandatory requirement. The use of one or the other shall not mean a different degree of right or obligation for either Party. A defined word intended to convey its special meaning is capitalized when used. Other terms that are capitalized, and not defined in this Agreement, shall have the meaning in the Act. For convenience of reference, Attachment 12 provides a list of acronyms used throughout this Agreement.

GENERAL TERMS AND CONDITIONS

1. **Provision of Local Service and Unbundled Network Elements**

1.1 This Agreement sets forth the terms, conditions and prices under which BellSouth agrees to provide: (a) telecommunications services that BellSouth currently provides, or may offer hereafter for resale; (b) interconnection of BellSouth's network to AT&T's network; (c) certain unbundled Network Elements ("Network Elements") and certain combinations of such unbundled Network Elements ("Combinations"); (d) access to poles, rights of way and conduits; and (e) collocation (resale, interconnection, Network Elements and Combinations, access to rights of way, poles and conduits, and collocation shall collectively be referred to as "Services and Elements"). This Agreement also sets forth the terms, conditions and prices for the Interconnection of AT&T's network to BellSouth's network and the intercarrier compensation between the Parties. BellSouth may fulfill the requirements imposed upon it by this Agreement by itself or**,** in the case of directory listings for white pages may cause BellSouth Advertising and Publishing Company ("BAPCO") to take such actions to fulfill BellSouth's responsibilities. This Agreement includes Attachments 1 – 12 and all accompanying Appendices and Exhibits. Unless otherwise provided in this Agreement, BellSouth will perform all of its obligations hereunder throughout its entire service area.

1.2 Subject to the requirements of this Agreement, AT&T may add, relocate or modify any Services and Elements purchased hereunder. Requests for additions or other changes shall be handled pursuant to the process provided in Attachment 10. Terminations of any Services or Elements shall be handled pursuant to Section 3 of the General Terms and Conditions of this Agreement.

1.3 BellSouth shall not discontinue Services and Elements provided pursuant to this agreement except as set forth herein. BellSouth may discontinue any telecommunications service available for resale as long as BellSouth provides AT&T prior written notice of intent to discontinue any such service. BellSouth further agrees to make any such service available to AT&T for resale to AT&T's end users who are subscribers of such services from AT&T until the date BellSouth discontinues any such service for BellSouth's customers. BellSouth also agrees to adopt a reasonable, nondiscriminatory transition schedule for BellSouth or AT&T end users who may be purchasing any such service.

1.4 This Agreement may be amended from time to time as mutually agreed in writing between the Parties. The Parties agree that neither Party will take any action to proceed, nor shall either have any obligation to proceed on a requested change unless and until a modification to this Agreement is signed by authorized representatives of each Party.

2. **Term of Agreement**

2.1 When executed by authorized representatives of BellSouth and AT&T, this Agreement shall become effective as of the Effective Date stated above, and shall expire three (3) years from the Effective Date unless terminated in accordance with the provisions of Section 3 of the General Terms and Conditions.

2.2 The Parties agree that by no earlier than two hundred seventy (270) days and no later than one hundred and eighty (180) days prior to the expiration of this Agreement, they may commence negotiations for a subsequent agreement ("Subsequent Agreement") with regard to the terms, conditions and obligations contained in this Agreement.

2.3 If, within one hundred and thirty five (135) days of commencing the negotiation referred to in Section 2.2, above, the Parties are unable to satisfactorily negotiate the Subsequent Agreement, either Party may petition the Commission to establish appropriate terms and conditions for those unresolved issues pursuant to 47 U.S.C. 252. If, as of the expiration of this Agreement, a Subsequent Agreement has not been executed by the Parties, and the Parties are not yet in arbitration, this Agreement shall continue on a month-to-month basis while (1) a Subsequent Agreement is actively being negotiated in good faith or alternatively, (2) a timely petition has been filed with the respective state public service commission and the Subsequent Agreement is subject to the respective state Commission arbitration pursuant to 252 of the Act. For the purposes of this Agreement, the Parties are considered in arbitration on the date an arbitration petition is filed with the respective state commission. Upon conversion to a month-to-month term, during such negotiations, provided that the Parties are not in arbitration, then either Party, in its discretion, may terminate this Agreement upon sixty (60) days written notice to the other Party. In the event that BellSouth terminates this Agreement as provided herein, BellSouth shall continue to provide service to AT&T pursuant to (1) the terms, conditions and rates set forth in BellSouth's standard interconnection agreement then in effect and made available to CLECs requesting negotiations pursuant to Section 251 of the Act, or (2) an agreement adopted by AT&T pursuant to Section 5 of this Agreement. Neither Party shall refuse to provide services to the Other Party during the negotiation of the Subsequent Agreement or the transition from this Agreement to the Subsequent Agreement.

3. Termination of Agreement; Transitional Support

3.1 AT&T may terminate any Services and Elements provided under this Agreement upon thirty (30) days written notice to BellSouth unless a different notice period or different conditions are specified for termination of such Services and Elements in this Agreement or pursuant to any applicable tariff, in which event such specific period or conditions shall apply, provided such

period or condition is reasonable, nondiscriminatory and narrowly tailored. Where there is no such different notice period or different condition specified, AT&T's liability shall be limited to payment of the amounts due for any terminated Services and Elements provided up to and including the date of termination. Notwithstanding the foregoing, the provisions of Section 10, infra, shall still apply. Upon termination, BellSouth agrees to cooperate in an orderly and efficient transition to AT&T or another vendor such that the level and quality of the Services and Elements is not degraded and to exercise its best efforts to effect an orderly and efficient transition. AT&T agrees that it may not terminate the entire Agreement pursuant to this section.

3.2 If a Party is in breach of a material term or condition of this Agreement ("Defaulting Party"), the other Party shall provide written notice of such breach to the Defaulting Party. The Defaulting Party shall have ten (10) business days from receipt of notice to cure the breach. If the breach is not cured, the Parties shall follow the dispute resolution procedure set forth in Section 16 of the General Terms and Conditions of this Agreement.

4. **Good Faith Performance**

4.1 In the performance of their obligations under this Agreement, the Parties shall act in good faith and consistently with the intent of the Act. Where notice, approval or similar action by a Party is permitted or required by any provision of this Agreement, (including, without limitation, the obligation of the Parties to further negotiate the resolution of new or open issues under this Agreement) such action shall not be unreasonably delayed, withheld or conditioned.

5. **Option to Obtain Services and Elements and Combinations Under Other Agreements**

5.1 BellSouth shall make available and AT&T may elect to adopt pursuant to 47 U.S.C. § 252 and the FCC rules and regulations regarding such availability any interconnection, service, or network element provided under an agreement approved pursuant to 47 U.S.C. § 252. The Parties shall adopt all rates, terms and conditions concerning such other interconnection, service or network element. The adopted interconnection, service, or network element and agreement shall apply to the same states as such other agreement. The term of the adopted agreement or provisions shall expire on the same date as set forth in the agreement that was adopted. AT&T may exercise this option by delivering written notice to BellSouth.

5.2 Any dispute between the Parties concerning any election or exercise of an option by AT&T under this Section 5 shall be resolved pursuant to the dispute resolution procedure set forth in Section 16 of the General Terms and Conditions of this Agreement.

6. **Responsibility of Each Party**

6.1 Each Party is an independent contractor, and has and hereby retains the right to exercise full control of and supervision over its own performance of its obligations under this Agreement and retains full control over the employment, direction, compensation and discharge of all employees assisting in the performance of such obligations. Each Party will be solely responsible for all matters relating to payment of such employees, including compliance with social security taxes, withholding taxes and all other regulations governing such matters. Each Party will be solely responsible for proper handling, storage, transport and disposal at its own expense of all (i) substances or materials that it or its contractors or agents bring to, create or assume control over at Work Locations or, (ii) Waste resulting therefrom or otherwise generated in connection with its or its contractors' or agents' activities at the Work Locations. Subject to the limitations on liability and except as otherwise provided in this Agreement, each Party shall be responsible for (i) its own acts and performance of all obligations imposed by Applicable Law in connection with its activities, legal status and property, real or personal and, (ii) the acts of its own affiliates, employees, agents and contractors during the performance of that Party's obligations hereunder.

7. **Governmental Compliance**

7.1 AT&T and BellSouth each shall comply at its own expense with all Applicable Law that relates to (i) its obligations under or activities in connection with this Agreement or (ii) its activities undertaken at, in connection with or relating to Work Locations. AT&T and BellSouth each agree to indemnify, defend (at the other Party's request) and save harmless the other, each of its officers, directors and employees from and against any losses, damages, claims, demands, suits, liabilities, fines, penalties and expenses (including reasonable attorneys' fees) that arise out of or result from (i) its failure or the failure of its contractors or agents to so comply or (ii) any activity, duty or status of it or its contractors or agents that triggers any legal obligation to investigate or remediate environmental contamination. BellSouth, at its own expense, will be solely responsible for obtaining from governmental authorities, building owners, other carriers, and any other persons or entities, all rights and privileges (including, but not limited to, space and power), which are necessary for BellSouth to provide the Services and Elements pursuant to this Agreement. AT&T, at its own expense, will be solely responsible for obtaining from governmental authorities, building owners, other carriers, and any other persons or entities, all rights and privileges which are AT&T's obligation as a provider of telecommunications services to its end users pursuant to this Agreement.

8. Responsibility For Environmental Contamination

8.1 AT&T shall in no event be liable to BellSouth for any costs whatsoever resulting from the presence or Release of any Environmental Hazard or

Hazardous Materials that AT&T did not introduce to the affected Work Location so long as AT&T's actions do not cause or substantially contribute to the Release of any Environmental Hazard or Hazardous Materials. BellSouth shall indemnify, defend (at AT&T's request) and hold harmless AT&T and each of its officers, directors and employees from and against any losses, damages, claims, demands, suits, liabilities, fines, penalties and expenses (including reasonable attorneys' fees) that arise out of or result from (i) any Environmental Hazard or Hazardous Materials that BellSouth, its contractors or its agents introduce to any Work Location or (ii) the presence or Release of any Environmental Hazard or Hazardous Materials for which BellSouth is responsible under Applicable Law**,** to the extent the Release of any Environmental Hazard or Hazardous Materials is not caused or substantially contributed to by AT&T's actions.

8.2 BellSouth shall in no event be liable to AT&T for any costs whatsoever resulting from the presence or Release of any Environmental Hazard or Hazardous Materials that BellSouth did not introduce to the affected Work Location, so long as BellSouth's actions do not cause or substantially contribute to the Release of any Environmental Hazards or Hazardous Materials. AT&T shall indemnify, defend (at BellSouth's request) and hold harmless BellSouth and each of its officers, directors and employees from and against any losses, damages, claims, demands, suits, liabilities, fines, penalties and expenses (including reasonable attorneys' fees) that arise out of or result from (i) any Environmental Hazard or Hazardous Materials that AT&T, its contractors or its agents introduce to any Work Location or (ii) the presence or Release of any Environmental Hazard or Hazardous Materials for which AT&T is responsible under Applicable Law, to the extent the release of any Environmental Hazard or Hazardous Materials is not caused or substantially contributed to by BellSouth's actions.

8.3 For purposes of this Section 8, the following terms shall have the following meaning:

8.3.1 "Environmental Hazard" means (1) that a Release (as hereinafter defined) of Hazardous Materials has occurred on premises or property that is related to the performance of this Agreement and that such Hazardous Material is demonstrated through applicable or appropriate testing methods to require remediation or removal as determined by all laws, ordinances, statutes, codes, rules, regulations, orders and decrees of the United States or of the state, county, city or any other political subdivision in which the Release has occurred, and any other political subdivision, agency or instrumentality exercising jurisdiction over the Release, including any applicable federal and state case law and common law interpreting any of the foregoing; or (2) any event involving, or exposure to, Hazardous Materials which poses risks to human health, safety or the environment (including, without limitation, indoor

or outdoor environments) and is regulated under any applicable laws or regulations as described in (1);

8.3.2 "Hazardous Materials" means any hazardous or toxic substance, material or waste listed in the United States Department of Transportation Hazardous Materials Table at 49 CFR 172.101; any hazardous substance listed by the Environmental Protection Agency ("EPA") under the Comprehensive Environmental, Response, Compensation, and Liability Act ("CERCLA"), 42 U.S.C. §§ 9601, et seq., as amended, and found at 40 CFR Part 302; any hazardous waste listed under the Resource Conservation and Recovery Act ("RCRA"), 42 U.S.C. §§ 6901, et seq., as amended, and found at 40 CFR Part 261; any toxic substance regulated by the Toxic Substances Control Act, 15 U.S.C. §§ 2601, et seq., as amended; any insecticide, fungicide, or rodenticide regulated by the Federal Insecticide, Fungicide, and Rodenticide Act, 7 U.S.C. §§ 136, et seq.; and the following specified substances or materials that may or may not be regulated by the above: (1) asbestos or asbestos-containing materials; (2) petroleum or petroleum-based or -derived products or by-products; (3) polychlorinated biphenyls ("PCBs"); and (4) radon.

8.3.3 "Release" means any release, spill, emission, leaking, pumping, injection, deposit, disposal, discharge, dispersal, leaching, or migration, including without limitation, the movement of Environmental Hazards through or in the air, soil, surface water or groundwater, or any action or omission that causes Environmental Hazards to spread or become more toxic or more expensive to investigate or remediate.

8.3.4 "Waste" means all hazardous and non-hazardous substances and materials which are intended to be discarded, scrapped, or recycled, associated with activities AT&T or BellSouth or their respective contractors or agents perform at Work Locations. It shall be presumed that all substances or materials associated with such activities, that are not in use or incorporated into structures (including without limitation damaged components or tools, leftovers, containers, garbage, scrap, residues or byproducts), except for substances and materials that AT&T, BellSouth or their respective contractors or agents intend to use in their original form in connection with similar activities, are Waste. "Waste" shall not include substances, materials or components incorporated into structures (such as cable routes) even after such components or structure are no longer in current use.

9. **Regulatory Matters**

9.1 BellSouth shall be responsible for obtaining and keeping in effect all Federal Communications Commission, State Commission, franchise authority and other regulatory approvals that may be required in connection with the performance of its obligations under this Agreement. AT&T shall be responsible for obtaining and keeping in effect all Federal Communications Commission, State

Commission, franchise authority and other regulatory approvals that may be required in connection with its offering of services to AT&T end users contemplated by this Agreement. AT&T shall reasonably cooperate with BellSouth in obtaining and maintaining any required approvals for which BellSouth is responsible, and BellSouth shall reasonably cooperate with AT&T in obtaining and maintaining any required approvals for which AT&T is responsible.

9.2 In the event that BellSouth is required by any governmental authority to file a tariff or make another similar filing ("Filing") in order to implement this Agreement, BellSouth shall (i) consult with AT&T reasonably in advance of such Filing about the form and substance of such Filing, (ii) provide to AT&T its proposed tariff and obtain AT&T's agreement on the form and substance of such Filing, and (iii) take all steps reasonably necessary to ensure that such Filing imposes obligations upon BellSouth that are no less favorable than those provided in this Agreement and preserves for AT&T the full benefit of the rights otherwise provided in this Agreement. In no event shall BellSouth file any tariff to implement this Agreement that purports to govern Services and Elements that is inconsistent with the rates and other terms and conditions set forth in this Agreement unless such rate or other terms and conditions are more favorable than those set forth in this Agreement.

9.3 In the event that any legally binding legislative, regulatory, judicial or other legal action materially affects any material terms of this Agreement, or the ability of AT&T or BellSouth to perform any material terms of this Agreement, AT&T or BellSouth may, on thirty (30) days' written notice (delivered not later than thirty (30) days following the date on which such action has become legally binding) require that such terms be renegotiated, and the Parties shall renegotiate in good faith such mutually acceptable new terms as may be required. In the event that such new terms are not renegotiated within thirty (30) days after such notice, the dispute shall follow the dispute resolution procedures set forth in Section 16 of the General Terms and Conditions of this Agreement. For purposes of this Section 9.3, legally binding means that the legal ruling has not been stayed; no request for a stay is pending, and if any deadline for requesting a stay is designated by statute or regulation, it has passed.

10. Liability and Indemnity

10.1 Liabilities of BellSouth - Unless expressly stated otherwise in this Agreement, the financial liability of BellSouth to AT&T during any Contract Year resulting from any and all causes of action arising under this Agreement shall not exceed the amount due and owing by BellSouth to AT&T during the Contract Year in which such cause arises or accrues.

10.2 Liabilities of AT&T - Unless expressly stated otherwise in this Agreement, the financial liability of AT&T to BellSouth during any Contract Year resulting

from any and all causes of action arising under this Agreement shall not exceed the amount due and owing by AT&T to BellSouth during the Contract Year in which such cause arises or accrues.

10.3 Each Party shall, to the greatest extent permitted by Applicable Law, include in its local switched service tariff (if it files one in a particular State) or in any State where it does not file a local service tariff, in an appropriate contract with its end users that relates to the Services and Elements provided under this Agreement, a limitation of liability (i) that covers the other Party to the same extent the first Party covers itself and (ii) that limits the amount of damages a customer may recover to the amount charged the applicable customer for the service that gave rise to such loss. To the extent that a Party elects not to place in its tariffs or contracts such limitations of liability, and the other Party incurs a loss as a result thereof, such Party shall indemnify and reimburse the other Party for that portion of the loss that would have been limited had the first Party included in its tariffs and contracts the limitations of liability that such other Party included in its own tariffs at the time of such loss. Neither BellSouth nor AT&T shall be liable for damages to the other Party's terminal location, equipment or end user premises resulting from the furnishing of a service, including, but not limited to, the installation and removal of equipment or associated wiring, except to the extent caused by a Party's negligence or willful misconduct or by a Party's failure to ground properly a local loop after disconnection.

10.4 No Consequential Damages - NEITHER AT&T NOR BELLSOUTH SHALL BE LIABLE TO THE OTHER PARTY FOR ANY INDIRECT, INCIDENTAL, CONSEQUENTIAL, RELIANCE, OR SPECIAL DAMAGES SUFFERED BY SUCH OTHER PARTY (INCLUDING WITHOUT LIMITATION DAMAGES FOR HARM TO BUSINESS, LOST REVENUES, LOST SAVINGS, OR LOST PROFITS SUFFERED BY SUCH OTHER PARTIES), REGARDLESS OF THE FORM OF ACTION, WHETHER IN CONTRACT, WARRANTY, STRICT LIABILITY, OR TORT, INCLUDING WITHOUT LIMITATION NEGLIGENCE OF ANY KIND WHETHER ACTIVE OR PASSIVE, AND REGARDLESS OF WHETHER THE PARTIES KNEW OF THE POSSIBILITY THAT SUCH DAMAGES COULD RESULT. EACH PARTY HEREBY RELEASES THE OTHER PARTY AND SUCH OTHER PARTY'S SUBSIDIARIES AND AFFILIATES, AND THEIR RESPECTIVE OFFICERS, DIRECTORS, EMPLOYEES AND AGENTS FROM ANY SUCH CLAIM. NOTHING CONTAINED IN THIS SECTION 10 SHALL LIMIT BELLSOUTH'S OR AT&T'S LIABILITY TO THE OTHER FOR (i) WILLFUL OR INTENTIONAL MISCONDUCT (INCLUDING GROSS NEGLIGENCE); (ii) BODILY INJURY, DEATH OR DAMAGE TO TANGIBLE REAL OR TANGIBLE PERSONAL PROPERTY PROXIMATELY CAUSED BY BELLSOUTH'S OR AT&T'S NEGLIGENT ACT OR OMISSION OR THAT OF THEIR RESPECTIVE AGENTS, SUBCONTRACTORS OR

EMPLOYEES, NOR SHALL ANYTHING CONTAINED IN THIS SECTION 10 LIMIT THE PARTIES' INDEMNIFICATION OBLIGATIONS AS SPECIFIED HEREIN. FOR PURPOSES OF THIS SECTION 10, BELLSOUTH'S FAILURE TO MEET PERFORMANCE STANDARDS OR MEASUREMENTS PURSUANT TO ATTACHMENT 9 OF THIS AGREEMENT, TO THE EXTENT APPLICABLE, SHALL NOT BE CONSIDERED TO BE INDIRECT, INCIDENTAL, CONSEQUENTIAL, RELIANCE, OR SPECIAL DAMAGES.

10.5 Obligation to Indemnify – Except as provided in Section 11 (Intellectual Property Rights and Indemnification), each Party shall, and hereby agrees to, defend at the other's request, indemnify and hold harmless the other Party and each of its officers, directors, employees and agents, Licensees or Joint Users in relation to Attachment 8, (each, an "Indemnitee") against and in respect of any loss, debt, liability, damage, obligation, claim, demand, judgment or settlement of any nature or kind, known or unknown, liquidated or unliquidated, including without limitation all reasonable costs and expenses incurred (legal, accounting or otherwise) (collectively, "Damages") arising out of, resulting from or based upon any pending or threatened claim, action, proceeding or suit by any third Party (a "Claim") (i) alleging any breach of any representation, warranty or covenant made by such indemnifying Party (the "Indemnifying Party") in this Agreement, or (ii) based upon injuries or damage to any person or property or the environment arising out of or in connection with this Agreement that are the result of the Indemnifying Party's actions, breach of Applicable Law, or status of its employees, agents and subcontractors.

10.6 Obligation to Defend; Notice; Cooperation - Whenever a Claim shall arise for indemnification under this Section 10, the relevant Indemnitee, as appropriate, shall promptly notify the Indemnifying Party and request the Indemnifying Party to defend the same. Failure to so notify the Indemnifying Party shall not relieve the Indemnifying Party of any liability that the Indemnifying Party might have, except to the extent that such failure prejudices the Indemnifying Party's ability to defend such Claim. The Indemnifying Party shall have the right to defend against such liability or assertion in which event the Indemnifying Party shall give written notice to the Indemnitee of acceptance of the defense of such Claim and the identity of counsel selected by the Indemnifying Party. Except as set forth below, such notice to the relevant Indemnitee shall give the Indemnifying Party full authority to defend, adjust, compromise or settle such Claim with respect to which such notice shall have been given, except to the extent that any compromise or settlement shall prejudice the Intellectual Property Rights of the relevant Indemnitees. The Indemnifying Party shall consult with the relevant Indemnitee prior to any compromise or settlement that would affect the Intellectual Property Rights or other rights of any Indemnitee, and the relevant Indemnitee shall have the right to refuse such compromise or settlement and, at the refusing Party's or refusing Parties' cost,

to take over such defense, provided that in such event the Indemnifying Party shall not be responsible for, nor shall it be obligated to indemnify the relevant Indemnitee against, any cost or liability in excess of such refused compromise or settlement. With respect to any defense accepted by the Indemnifying Party, the relevant Indemnitee shall be entitled to participate with the Indemnifying Party in such defense if the Claim requests equitable relief or other relief that could affect the rights of the Indemnitee and also shall be entitled to employ separate counsel for such defense at such Indemnitee's expense. In the event the Indemnifying Party does not accept the defense of any indemnified Claim as provided above, the relevant Indemnitee shall have the right to employ counsel for such defense at the expense of the Indemnifying Party. Each Party agrees to cooperate and to cause its employees and agents to cooperate with the other Party in the defense of any such Claim and the relevant records of each Party shall be available to the other Party with respect to any such defense.

10.7 Disclaimer. EXCEPT AS SPECIFICALLY PROVIDED TO THE CONTRARY IN THIS AGREEMENT, OR UNLESS ANY APPLICABLE PERFORMANCE MEASUREMENT OBLIGATIONS ESTABLISHED BY THE STATE COMMISSION PROVIDE OTHERWISE, NEITHER PARTY MAKES ANY REPRESENTATIONS OR WARRANTIES TO THE OTHER PARTY CONCERNING THE SPECIFIC QUALITY OF ANY SERVICES, OR FACILITIES PROVIDED UNDER THIS AGREEMENT. EXCEPT AS SPECIFICALLY PROVIDED TO THE CONTRARY IN THIS AGREEMENT, OR UNLESS ANY APPLICABLE PERFORMANCE MEASUREMENT OBLIGATIONS ESTABLISHED BY THE STATE COMMISSION PROVIDE OTHERWISE, THE PARTIES DISCLAIM, WITHOUT LIMITATION, ANY WARRANTY OR GUARANTEE OF MERCHANTABILITY OR FITNESS FOR A PARTICULAR PURPOSE, ARISING FROM COURSE OF PERFORMANCE, COURSE OF DEALING, OR FROM USAGES OF TRADE.

11. Intellectual Property Rights and Indemnification

11.1 Use of Mark. No patent, copyright, trademark or any other Intellectual property right is licensed, granted or otherwise transferred by this Agreement except as expressly provided for in this Agreement. Both Parties are strictly prohibited from any use, including but not limited to, in selling, marketing, promoting or advertising of telecommunications services of any name, trade name, service mark or trademark, trade dress or other indicia of origin (collectively, the “Marks”) of the Other Party. Notwithstanding the foregoing, either Party may (i) make factual references to the Other Party’s name as necessary to respond to direct inquiries from customers or potential customers regarding the source of underlying services or the identity of repair technicians, and (ii) use the Other Party’s name in comparative advertising so long as the

reference is truthful and factual, is not likely to cause confusion, mistake or deception, and does not imply any agency relationship, partnership, endorsement, sponsorship, or affiliation by or with the Other Party and provided that the Other Party's name appears in standard type, non-logo format. The Marks include those Marks owned directly by a Party or its Affiliate(s) and those Marks that a Party has a legal and valid license to use. The Parties acknowledge that they are separate and distinct and that each provides a separate and distinct service and agree that neither Party may, expressly or impliedly, state, advertise or market that it is or offers the same service as Other Party or engage in any other activity that may result in a likelihood of confusion between its own service and the service of the Other Party. Notwithstanding the foregoing, neither Party is prohibited from stating, advertising and marketing the types of services it provides (e.g., local service, long distance service, etc.).

11.2 Ownership of Intellectual Property. Any intellectual property that originates from or is developed by a Party shall remain in the exclusive property of that Party. Except for a limited, non assignable, non-exclusive, non-transferable license to use patents or copyrights to the extent necessary for the Parties to use any facilities or equipment (including software) or to receive any service solely as provided under this Agreement, no license in patent, copyright, trademark, trade secret or other proprietary or intellectual property right, now or hereafter owned, controlled or licensable by a Party, is granted to the other Party. Neither shall it be implied nor arise by estoppel. Any trademark, copyright or other proprietary notices appearing in association with the use of any facilities or equipment (including software) shall remain on the documentation, material, product, service, equipment or software. It is the responsibility of each Party to ensure at no additional cost to the other Party that it has obtained any necessary licenses in relation to intellectual property of third Parties used in its network that may be required to enable the other Party to use any facilities or equipment (including software), to receive any service, or to perform its respective obligations under this Agreement.

11.3 BellSouth and AT&T (if and to the extent BellSouth uses AT&T facilities or equipment, including software) warrants that each other may use any facilities or equipment, including software, provided hereunder that contains intellectual property owned or controlled by third parties without being subject to any claims of infringement by such third parties. Each Party further warrants that it will not enter into any licensing agreements with respect to any facilities or equipment, including software, that contain provisions that would disqualify the other Party from using or interconnecting with such facilities or equipment, including software, pursuant to the terms of this Agreement. Each Party further warrants that it has not and will not intentionally modify any existing license agreements for any network facilities or equipment, including software, in whole or in part for the purpose of disqualifying the other Party from using or interconnecting with such facilities or equipment, including software,

pursuant to the terms of this Agreement. To the extent that providers of facilities or equipment, including software, in either Party's network provide indemnities covering intellectual property liabilities and those indemnities allow a flow-through of protection to third parties, the indemnified party shall flow those indemnity protections through to the other Party. Finally each Party shall indemnify the other pursuant to the terms of this Agreement, with respect to the other Party's use of intellectual property associated with any new network facilities or equipment, including software, acquisitions.

11.4 BellSouth Indemnification. BellSouth will defend AT&T against claims of infringement arising solely from the use by AT&T of Services and Elements and will indemnify AT&T for any damages awarded based solely on such claims in accordance with Section 11 of this Agreement.

11.4.1 For purposes of Section 11.4 of this Agreement, BellSouth's obligation to indemnify AT&T shall include the obligation to indemnify and hold AT&T harmless from and against any loss, cost, expense or liability arising out of a claim that AT&T's use, pursuant to the terms of this Agreement, of BellSouth's facilities, equipment or software infringes the intellectual property rights of a third party. Should any such facilities, equipment or software, or any portion thereof, provided by BellSouth hereunder become, or, in BellSouth's reasonable opinion, be likely to become the subject of a claim of infringement, or should BellSouth's use thereof be finally enjoined, then BellSouth shall, at its expense and at its option, , (i) procure for AT&T the right to continue using such facilities, equipment or software or portion thereof; or (ii) replace or modify such facilities, equipment or software or portion thereof to make it non-infringing, provided, however, that such replacement or modification shall be functionally equivalent to the facilities, equipment or software or portion thereof that is replaced or modified.

11.5 AT&T Indemnification. AT&T (if and only to the extent AT&T provides BellSouth access to its facilities and equipment, including software) will defend BellSouth against claims of infringement arising solely from the use by BellSouth of AT&T facilities or equipment, including software, and to the extent BellSouth uses AT&T facilities or equipment, including software, and will indemnify BellSouth for any damages awarded based solely on such claims in accordance with Section 11 of this Agreement.

11.5.1 For purposes of Section 11.5 of this Agreement, AT&T's obligation to indemnify BellSouth shall include the obligation to indemnify and hold BellSouth harmless from and against any loss, cost, expense or liability arising out of a claim that BellSouth's use, pursuant to the terms of this Agreement, of AT&T facilities or equipment, including software, infringes the intellectual property rights of a third party. Should any such facilities or equipment, including software, or any portion thereof, provided by AT&T hereunder become, or, in AT&T's reasonable opinion, be likely to become the subject of

a claim of infringement, or should AT&T's use thereof be finally enjoined, then AT&T shall, at its expense and at its option, (i) procure for BellSouth the right to continue using such facilities, equipment or software or portion thereof; or (ii) replace or modify such facilities, equipment or software or portion thereof to make it non-infringing, provided, however, that such replacement or modification shall be functionally equivalent to the facilities, equipment or software or portion thereof that is replaced or modified.

11.6 In the event that the provisions of Section 11.4.1 or Section 11.5.1 of this Agreement are unreasonable for the indemnifying Party to perform or if the indemnifying Party is permanently enjoined by a court of law from providing any infringing facilities or equipment, including software, then either Party shall have the right, in its sole discretion, to terminate the portion of the Agreement, upon thirty (30) days written notice, solely with respect to the infringing facilities or equipment, including software.

11.7 The Party providing access to its facilities or equipment, including software, will inform the other Party of any pending or threatened intellectual property claims of which it is aware and will provide to the other Party periodic and timely updates of such notification, as appropriate, so that the other Party receives maximum notice of any intellectual property risks that it may want to address.

11.8 Exception to Obligations. Neither Party's obligations under this Section shall apply to the extent the infringement is caused by: (i) modification of the facilities or equipment (including software) by the indemnitee; (ii) use by the indemnitee of the facilities or equipment (including software) in combination with equipment or facilities (including software) not provided or authorized by the indemnitor provided the facilities or equipment (including software) would not be infringing if used alone; (iii) conformance to specifications of the indemnitee which would necessarily result in infringement; (iv) continued use by the indemnitee of the affected facilities or equipment (including software) after being placed on notice to discontinue use as set forth herein; or (v) use of the facilities or equipment (including software) by indemnitee in violation of this Agreement.

11.9 Exclusive Remedy. The foregoing shall constitute the Parties' sole and exclusive remedies and obligations with respect to a third party claim of intellectual property infringement arising out of the conduct of business under this Agreement.

11.10 Dispute Resolution. Any claim arising under this Section 11 shall be excluded from the dispute resolution procedures set forth in Section 16 and shall be brought in a court of competent jurisdiction.

12. Audits and Inspections

12.1.1 Subject to BellSouth's reasonable security requirements and except as may be otherwise specifically provided in this Agreement, AT&T may audit BellSouth's books, records and other documents once in each Contract Year for the purpose of evaluating the accuracy of BellSouth's billing and invoicing including the evaluation authorized in Section 12.2 following. AT&T may employ other persons or firms for this purpose. Such audit shall take place at a time and place agreed on by the Parties no later than thirty (30) days after notice thereof to BellSouth, and shall be conducted over a reasonable period of time.

12.1.2 BellSouth shall promptly correct any billing error that is revealed in an audit, including making refund of any overpayment by AT&T in the form of a credit on the invoice as well as placing a debit on the invoice for underbilling. The credit or debit will be accomplished within two billing cycles after the Parties have agreed upon the accuracy of the audit results. Any Disputes concerning audit results shall be resolved pursuant to the dispute resolution procedures described in Section 16 of the General Terms and Conditions of this Agreement.

12.1.3 BellSouth shall cooperate in any such audit, providing reasonable access to all necessary BellSouth employees and books, records and other documents reasonably necessary to assess the accuracy of BellSouth's bills.

12.1.4 AT&T may audit BellSouth's books, records and documents more than once during any Contract Year if the previous audit found previously uncorrected net variances or errors in invoices in BellSouth's favor with an aggregate value of at least two percent (2%) of the amounts payable by AT&T for Services and Elements or Combinations provided during the period covered by the audit.

12.1.5 Audits shall be at AT&T's expense, subject to reimbursement by BellSouth of any reasonably incurred expense in the event that an audit finds an adjustment in the charges or in any invoice paid or payable by AT&T hereunder by an amount that is, on an annualized basis, greater than four percent (4%) of the aggregate charges for the Services and Elements during the period covered by the audit.

12.1.6 Upon (i) the discovery by BellSouth of overcharges not previously reimbursed to AT&T or (ii) the resolution of disputed audits, BellSouth shall promptly reimburse AT&T the amount of any overpayment times the highest interest rate (in decimal value) which may be levied by law for commercial transactions, compounded daily for the number of days from the date of overpayment to and including the date that payment is actually made. In no event, however, shall interest be assessed on any previously assessed or accrued late payment charges.

12.2 Subject to reasonable security requirements, either Party may audit the books, records and other documents of the other for the purpose of evaluating usage pertaining to transport and termination of local traffic. Where such usage data is being transmitted through CABS, the audit shall be conducted in accordance with CABS or other applicable requirements approved by the appropriate State Commission. If data is not being transferred via CABS, either Party may request an audit for such purpose once each Contract Year. Either Party may employ other persons or firms for this purpose. Any such audit shall take place no later than thirty (30) days after notice thereof to the other Party and shall be conducted over a reasonable period of time.

12.2.1 Either Party shall promptly correct any reported usage error that is revealed in an audit, including making a refund of any overpayment by AT&T in the form of a credit on the invoice as well as placing a debit on the invoice for underbilling. The credit or debit will be accomplished within two billing cycles after the Parties have agreed upon the accuracy of the audit results. Any Disputes concerning audit results shall be resolved pursuant to the dispute resolution procedures described in Section 16 of the General Terms and Conditions of this Agreement.

12.2.2 The Parties shall cooperate in any such audit, providing reasonable access to all necessary employees and books, records and other documents reasonably necessary to assess the usage pertaining to transport and terminating of local traffic.

13. Service Quality Measurement

13.1 Service Quality Measurements shall be as set forth in Attachment 9 of this Agreement.

13.2 BellSouth shall provide telecommunications services pursuant to Attachment 1 to AT&T for resale that are equal in quality, subject to the same conditions, and provided within the same provisioning time intervals that BellSouth provides these services to others, including end users.

13.3 BellSouth shall provide, for the facilities and equipment of AT&T, interconnection with BellSouth's network that is at a level of quality that is equal to that which BellSouth provides itself, a subsidiary, an affiliate, or any other Party to which BellSouth provides interconnection.

13.4 To the extent technically feasible, the quality of a Network Element, as well as the quality of the access to such Network Element, provided to AT&T by BellSouth shall be at least equal in quality to that which BellSouth provides to itself.

14. Force Majeure

14.1 Neither Party shall be liable for any delay or failure in performance of any part of this Agreement caused by a Force Majeure condition, including acts of the United States of America or any state, territory or political subdivision thereof, acts of God or a public enemy, fires, floods, disputes, freight embargoes, strikes**,** labor disputes, earthquakes, volcanic actions, wars, civil disturbances, or other causes beyond the reasonable control of the Party claiming excusable delay or other failure to perform. Force Majeure shall not include acts of any Governmental Authority relating to environmental, health or safety conditions at Work Locations. If any Force Majeure condition occurs, the Party whose performance fails or is delayed because of such Force Majeure condition shall give prompt notice to the other Party, and upon cessation of such Force Majeure condition, shall give like notice and commence performance hereunder as promptly as reasonably practicable.

14.2 Notwithstanding Section 14.1 of this Agreement, no delay or other failure to perform shall be excused pursuant to this Section 14 by the acts or omission of a Party's subcontractors, material persons, suppliers or other third persons providing products or services to such Party unless: (i) there is a Force Majeure condition that affects the performance of said subcontractors, material persons, suppliers or other third persons, (ii) such acts or omissions do not relate to environmental, health or safety conditions at Work Locations and, (iii) unless such delay or failure and the consequences thereof are beyond the control and without the fault or negligence of the Party claiming excusable delay or other failure to perform. Notwithstanding the foregoing, this Section 14 shall not excuse failure or delays where either Party is required to implement Disaster Recovery plans to avoid such failures and delays in performance and the Party failed to implement such plan. This limitation applies only to the extent that the Party's implementation of the Disaster Recovery Plans would have avoided the failure or delay.

15 Certain Federal, State and Local Taxes

15.1 Definition. For purposes of this Section 15, the terms "taxes" and "fees" shall include but not be limited to federal, state or local sales, use, excise, gross receipts or other taxes or tax-like fees of whatever nature and however designated (including tariff surcharges and any fees, charges or other payments, contractual or otherwise, for the use of public streets or rights of way, whether designated as franchise fees or otherwise) imposed, or sought to be imposed, on either of the Parties, and measured by the charges or payments for the services furnished hereunder, excluding any taxes levied on income.

15.2 Taxes And Fees Imposed Directly On Either Seller Or Purchaser

15.2.1 Taxes and fees imposed on the providing Party, which are neither permitted nor required to be passed on by the providing Party to its Customer, shall be borne and paid by the providing Party.

15.2.2 Taxes and fees imposed on the purchasing Party, which are not required to be collected and/or remitted by the providing Party, shall be borne and paid by the purchasing Party.

15.3 Taxes And Fees Imposed On Purchaser But Collected And Remitted By Seller

15.3.1 Taxes and fees imposed on the purchasing Party shall be borne by the purchasing Party, even if the obligation to collect and/or remit such taxes or fees is placed on the providing Party.

15.3.2 To the extent permitted by applicable law, any such taxes and/or fees shall be shown as separate items on applicable billing documents between the Parties. Notwithstanding the foregoing, the purchasing Party shall remain liable, to the extent permitted by Applicable law, for any such taxes and fees regardless of whether they are actually billed by the providing Party at the time that the respective service is billed.

15.3.3 If the purchasing Party determines that in its opinion any such taxes or fees are not lawfully due, the providing Party shall not bill such taxes or fees to the purchasing Party if the purchasing Party provides written certification, reasonably satisfactory to the providing Party, stating that it is exempt or otherwise not subject to the tax or fee, setting forth the basis therefor, and satisfying any other requirements under applicable law. If any authority seeks to collect any such tax or fee that the purchasing Party has determined and certified not to be lawfully due, or any such tax or fee that was not billed by the providing Party, the purchasing Party may contest the same in good faith, at its own expense. In the event that such contest must be pursued in the name of the providing Party, the providing Party shall permit the purchasing Party to pursue and control the contest in the name of providing Party and providing Party shall have the opportunity to participate fully in the preparation of such contest. In any such contest, the purchasing Party shall promptly furnish the providing Party with copies of all filings in any proceeding, protest, or legal challenge, all rulings issued in connection therewith, and all correspondence between the purchasing Party and the taxing authority.

15.3.4 In the event that all or any portion of an amount sought to be collected must be paid in order to contest the imposition of any such tax or fee, or to avoid the existence of a lien on the assets of the providing Party during the pendency of such contest, the purchasing Party shall be responsible for such payment and shall be entitled to the benefit of any refund or recovery.

15.3.5 If it is ultimately determined that any additional amount of such a tax or fee is due to the imposing authority, the purchasing Party shall pay such additional amount, including any interest and penalties thereon.

15.3.6 Notwithstanding any provision to the contrary, the purchasing Party shall protect, indemnify and hold harmless (and defend at the purchasing Party's expense) the providing Party from and against any such tax or fee, interest or penalties thereon, or other charges or payable expenses (including reasonable attorney fees) with respect thereto, which are reasonably and necessarily incurred by the providing Party in connection with any claim for or contest of any such tax or fee.

15.3.7 Each Party shall notify the other Party in writing of any assessment, proposed assessment or other claim for any additional amount of such a tax or fee by a taxing authority; such notice to be provided, if possible, at least ten (10) days prior to the date by which a response, protest or other appeal must be filed, but in no event later than thirty (30) days after receipt of such assessment, proposed assessment or claim.

15.4 Taxes And Fees Imposed On Seller But Passed On To Purchaser

15.4.1 Taxes and fees imposed on the providing Party, which are permitted or required to be passed on by the providing Party to its Customer, shall be borne by the purchasing Party.

15.4.2 To the extent permitted by applicable law, any such taxes and/or fees shall be shown as separate items on applicable billing documents between the Parties. Notwithstanding the foregoing, to the extent permitted by Section 15 with respect to the billing of services provided hereunder, the purchasing Party shall remain liable for any such taxes and fees regardless of whether they are actually billed by the providing Party at the time that the respective service is billed.

15.4.3 If the purchasing Party disagrees with the providing Party's determination as to the application or basis for any such tax or fee, the Parties shall consult with respect to the imposition and billing of such tax or fee and with respect to whether to contest the imposition of such tax or fee. Notwithstanding the foregoing, the providing Party shall retain responsibility for determining whether and to what extent any such taxes or fees are applicable. The providing Party shall further retain responsibility for determining whether and how to contest the imposition of such taxes or fees, provided, however, the Parties agree to consult in good faith as to such contest and that any such contest undertaken at the request of the purchasing Party shall be at the purchasing Party's expense. In the event that such contest must be pursued in the name of the providing Party, providing Party shall permit purchasing Party to pursue the contest in the name of the providing Party and the providing Party shall have the opportunity to participate fully in the preparation of such contest.

15.4.4 If, after consultation in accordance with the preceding Section 15.4.3, the purchasing Party does not agree with the providing Party's final determination as to the application or basis of a particular tax or fee, and if the providing Party, after receipt of a written request by the purchasing Party to contest the imposition of such tax or fee with the imposing authority, fails or refuses to pursue such contest or to allow such contest by the purchasing Party, the purchasing Party may utilize the dispute resolution process outlined in Section 16 of the General Terms and Conditions of this Agreement. Utilization of the dispute resolution process shall not relieve the purchasing Party from liability for any tax or fee billed by the providing Party pursuant to this subsection during the pendency of such dispute resolution proceeding. In the event that the purchasing Party prevails in such dispute resolution proceeding, it shall be entitled to a refund in accordance with the final decision therein. Notwithstanding the foregoing, if at any time prior to a final decision in such dispute resolution proceeding the providing Party initiates a contest with the imposing authority with respect to any of the issues involved in such dispute resolution proceeding, the dispute resolution proceeding shall be dismissed as to such common issues and the final decision rendered in the contest with the imposing authority shall control as to such issues.

15.4.5 In the event that all or any portion of an amount sought to be collected must be paid in order to contest the imposition of any such tax or fee with the imposing authority, or to avoid the existence of a lien on the assets of the providing Party during the pendency of such contest, the purchasing Party shall be responsible for such payment and shall be entitled to the benefit of any refund or recovery.

15.4.6 If it is ultimately determined that any additional amount of such a tax or fee is due to the imposing authority, the purchasing Party shall pay such additional amount, including any interest and penalties thereon.

15.4.7 Notwithstanding any provision to the contrary, the purchasing Party shall protect, indemnify and hold harmless (and defend at the purchasing Party's expense) the providing Party from and against any such tax or fee, interest or penalties thereon, or other reasonable charges or payable expenses (including reasonable attorney fees) with respect thereto, which are incurred by the providing Party in connection with any claim for or contest of any such tax or fee which purchasing Party elects to contest or which purchasing Party provides written authorization for the providing Party to undertake on behalf of the purchasing Party.

15.4.8 Each Party shall notify the other Party in writing of any assessment, proposed assessment or other claim for any additional amount of such a tax or fee by a taxing authority, such notice to be provided, if possible, at least ten (10) days prior to the date by which a response, protest or other appeal

must be filed, but in no event later than thirty (30) days after receipt of such assessment, proposed assessment or claim.

15.5 Mutual Cooperation

15.5.1 In any contest of a tax or fee by one Party, the other Party shall cooperate fully by providing records, testimony and such additional information or assistance as may reasonably be necessary to pursue the contest. Further, the other Party shall be reimbursed for any reasonable and necessary out-of-pocket copying and travel expenses incurred in assisting in such contest. Each Party agrees to indemnify and hold harmless the other Party from and against any losses, damages, claims, demands, suits, liabilities, and expenses, including reasonable attorney's fees, that arise out of its failure to perform its obligations under this section.

16 Dispute Resolution Process

Except as otherwise stated in this Agreement, i.e. the process for resolving billing disputes as described in Attachment 7, Section 1.13, the Parties agree that any other dispute that arises as to the interpretation of any provision of this Agreement or as to the proper implementation of this Agreement, may be taken to the Commission for resolution. The Parties may, by mutual agreement, agree to an alternative dispute resolution mechanism for any dispute, except billing disputes shall be resolved as described in Attachment 7, Section 1.13. Each Party reserves the rights it may have to seek judicial review of any ruling made by the Commission concerning this Agreement.

17 Notices

17.1 Any notices or other communications required or permitted to be given or delivered under this Agreement shall be in hard-copy writing (unless otherwise specifically provided herein) and shall be sufficiently given if delivered personally or delivered by prepaid overnight express service to the following (unless otherwise specifically required by this Agreement to be delivered to another representative or point of contact):

If to AT&T:

Bill Peacock
AT&T
6304 Highway 5
Douglasville, GA 30135
bpeacock@att.com

Chief Commercial Attorney
AT&T
Legal Department

1230 Peachtree St., N.E.
Fourth Floor
Atlanta, GA 30309

If to BellSouth:

Assistant Vice President
AT&T Account Team
Interconnection Services
Suite 410
1960 W. Exchange Place
Tucker, GA 30064

General Counsel -Commercial Unit
BellSouth
Legal Department
675 W. Peachtree St., Suite 4300
Atlanta, GA 30375

17.2 Either Party may unilaterally change its designated representative and/or address for the receipt of notices by giving seven (7) days prior written notice to the other Party in compliance with this Section. Any notice or other communication shall be deemed given when received.

18 Confidentiality and Proprietary Information

18.1 For the purposes of this Agreement, "Confidential Information" means confidential or proprietary technical or business Information given by one Party (the "Discloser") to the other Party (the "Recipient") and identified by the Discloser as Confidential Information in accordance with this Section. All information which is to be treated as Confidential Information under this Agreement shall:

18.1.1 If in written, graphic, electromagnetic, or other tangible form, be marked as "Confidential Information"; and

18.1.2 If oral, (i) be identified by the Discloser at the time of disclosure to be "Confidential Information", and (ii) be set forth in a written summary which identifies the information as "Confidential Information" and which is delivered by the Discloser to the Recipient within ten (10) days after the oral disclosure.

18.1.3 Each Party shall have the right to correct an inadvertent failure to identify information as Confidential Information by giving written notification within thirty (30) days after the information is disclosed. The Recipient shall, from that time forward, treat such information as Confidential Information.

However, the Recipient is not responsible for its disclosure of any information conveyed prior to such correction.

18.2 In addition to any requirements imposed by 47 U.S.C. § 222, for a period of five (5) years from the receipt of Confidential Information from the Discloser, except as otherwise specified in this Agreement, the Recipient agrees (a) to use it only for the purpose of performing under this Agreement, (b) to hold it in confidence and disclose it to no one other than its employees having a need to know for the purpose of performing under this Agreement, and (c) to safeguard it from unauthorized use or disclosure with at least the same degree of care with which the Recipient safeguards its own Confidential Information. If the Recipient wishes to disclose the Discloser's Confidential Information to a third Party agent or consultant, the agent or consultant must have executed a written agreement of non-disclosure and non-use comparable in scope to the terms of this Section.

18.3 The Recipient may make copies of Confidential Information only as reasonably necessary to perform its obligations under this Agreement. All such copies shall bear the same copyright and proprietary rights notices as are contained on the original.

18.4 The Recipient agrees to return all Confidential Information in tangible form received from the Discloser, including any copies made by the Recipient, within thirty (30) days after a written request is delivered to the Recipient, or to destroy all such Confidential Information, except for Confidential Information that the Recipient reasonably requires to perform its obligations under this Agreement. If either Party loses or makes an unauthorized disclosure of the other Party’s Confidential Information, it shall notify such other Party immediately and use reasonable efforts to retrieve the lost or wrongfully disclosed information.

18.5 The Recipient shall have no obligation to safeguard Confidential Information: (a) which was in the possession of the Recipient free of restriction prior to its receipt from the Discloser; (b) after it becomes publicly known or available through no breach of this Agreement by the Recipient; (c) after it is rightfully acquired by the Recipient free of restrictions on its disclosure; or (d) after it is independently developed by personnel of the Recipient to whom the Discloser's Confidential Information had not been previously disclosed. In addition, either Party shall have the right to disclose Confidential Information to any mediator, arbitrator, state or federal regulatory body, the Department of Justice or any court in the conduct of any mediation, arbitration or approval of this Agreement or in any proceedings concerning the provision of interLATA services by BellSouth that are or may be required by the Act. Additionally, the Recipient may disclose Confidential Information if so required by law, a court, or governmental agency, so long as the Discloser has been notified of the

requirement promptly after the Recipient becomes aware of the requirement. In all cases, the Recipient must undertake all lawful measures to avoid disclosing such information until Discloser has had reasonable time to seek and comply with a protective order that covers the Confidential Information to be disclosed.

18.6 Each Party's obligations to safeguard Confidential Information disclosed prior to expiration or termination of this Agreement shall survive such expiration or termination and continue in effect until two (2) years after the expiration or termination date of this Agreement with regard to all Information exchanged during the term of this Agreement. Thereafter, the Parties' rights and obligations hereunder survive and continue in effect with respect to any Information that is a trade secret under applicable law.

18.7 Except as otherwise expressly provided elsewhere in this Agreement, no license is hereby granted under any patent, trademark, or copyright, nor is any such license implied, solely by virtue of the disclosure of any Confidential Information.

18.8 Each Party agrees that the Discloser would be irreparably injured by a breach of this Agreement by the Recipient or its representatives and that the Discloser shall be entitled to seek equitable relief, including injunctive relief and specific performance, in the event of any breach of the provisions of this Agreement. Such remedies shall not be deemed to be the exclusive remedies for a breach of this Agreement, but shall be in addition to all other remedies available at law or in equity.

19 Branding

19.1 In those instances where AT&T requires BellSouth personnel or systems to interface with AT&T end users, such personnel shall identify themselves as representing AT&T, and shall not identify themselves as representing BellSouth. Except for material provided by AT&T, all forms, business cards or other business materials furnished by BellSouth to AT&T end users shall be subject to AT&T's prior review and approval. In no event shall BellSouth, acting on behalf of AT&T pursuant to this Agreement, provide information to AT&T local service Customers about BellSouth products or services**.** BellSouth agrees to provide in sufficient time for AT&T to review and provide comments, the methods and procedures, training and approaches, to be used by BellSouth to assure that BellSouth meets AT&T's branding requirement. For installation and repair services, AT&T agrees to provide BellSouth with branded material at no charge for use by BellSouth ("Leave Behind Material"). AT&T will reimburse BellSouth for the reasonable and demonstrable costs BellSouth would otherwise incur as a result of the use of the generic leave behind material. BellSouth will notify AT&T of material supply exhaust in sufficient time that material will always

be available. BellSouth will not be liable for any error, mistake or omission, other than intentional acts or omissions or gross negligence, resulting from the requirements to distribute AT&T's Leave Behind Material.

20 Directory Listings Requirements

20.1 BellSouth shall make available to AT&T, for AT&T subscribers, non-discriminatory access to its telephone number and address directory listings ("Directory Listings"), under the following terms and conditions. In no event shall AT&T subscribers receive Directory Listings that are at less favorable rates, terms or conditions than the rates, terms or conditions that BellSouth provides its subscribers.

20.2 BellSouth has delegated certain authority to its affiliate, BellSouth Advertising & Publishing Corporation ("BAPCO"), and has required BAPCO to carry out certain BellSouth obligations imposed by the Act regarding the publication of directories. AT&T and BAPCO have entered into an agreement regarding BAPCO's treatment of AT&T's end users' directory listing information in directories published by BAPCO. BellSouth shall maintain the Directory Listings database, which includes AT&T's end users' directory listing information, used by BAPCO in publishing such directories in accordance with Section 20.2.1 below. Subject to execution of such agreement between AT&T and BAPCO, BAPCO shall publish directory listings as follows:

20.3 White Pages Basic Directory Listings. BellSouth shall publish in all BellSouth's white pages Directories at no charge to AT&T or any AT&T Customer other than the applicable OSS service order charges as described in Attachment 6 of this Agreement, one white pages basic Directory Listing for each AT&T Customer for all of such Customer's phone numbers located in the geographic region covered by any white pages Directory. Notwithstanding the foregoing, BellSouth shall not publish any white pages basic Directory Listing for any AT&T Customer whose Directory Listing has been identified as non-published. AT&T will be required to provide to BellSouth the names, addresses and telephone numbers of all AT&T end users that wish to be omitted from directories.

20.4 Enhanced White Pages Listings. Where BellSouth offers to publish, at no charge, in its white pages directory Enhanced White Pages Listings to its retail customers, BellSouth shall publish such listings, at no charge and under the same terms and conditions, for AT&T for its end users. Where BellSouth charges its retail customers for Enhanced White Pages Listings, BellSouth shall publish such listings under the same terms and conditions to AT&T for its Customers at the applicable wholesale discount set forth in Attachment 1.

20.5 Yellow Pages Basic Directory Listings. Where BellSouth offers to publish in its Yellow Pages Directory free Yellow Pages listings to its retail end users, BellSouth shall publish such listings, at no charge and under the same terms and conditions to AT&T for its end users. Where BellSouth charges business customers for Yellow Pages basic Directory Listings, BellSouth shall provide one Yellow Pages basic Directory Listing for each AT&T end user, who subscribes to business services, at BellSouth tariffed rates at the applicable wholesale discount set forth in Attachment 1. BellSouth shall not provide "lead" information on AT&T end users to its Yellow Pages directory publishing Affiliate without written permission from AT&T.

20.6 Treatment of Directory Listings. BellSouth shall treat all Directory Listings with the same level of confidentiality that BellSouth accords its own directory listing information, and BellSouth shall limit access to AT&T's end user proprietary confidential directory information to those BellSouth employees who are involved in the preparation of listings. Directory Listings of AT&T Customers shall be alphabetically commingled with the Directory Listings of all other telecommunications carriers, including BellSouth. All Directory Listings published by BellSouth will be as accurate and complete as BellSouth's own listings or those of its Affiliates.

20.7 Reserved Rights. AT&T reserves the right to withhold Directory Listing information from BellSouth if BellSouth charges AT&T a rate for inclusion of AT&T's unlisted numbers in the BellSouth directory databases exceeding the BellSouth retail tariffed charge for unlisted numbers.

20.8 Directory Listings Database

20.8.1 Maintenance. BellSouth shall maintain a Directory Listings database that shall include the directory listings of BellSouth, AT&T and any other carrier for whom BellSouth has agreed to publish Directory Listings. AT&T and BellSouth shall cooperate to ensure that Directory Listing information relating to AT&T end users is delivered to BellSouth and reflected in such database in a timely and accurate manner (and in no event in a manner that is less timely or accurate than the manner in which BellSouth's Directory Listings database is updated for information relating to BellSouth's end user). Data should be generated from the local service order process and other data feeds for facility-based carriers and should be subject to the same rigorous edits that are applied to BellSouth local service orders. BellSouth shall use all commercially reasonable efforts to maintain the Directory Listings database in good order. BellSouth shall advise AT&T as soon as possible, but in no event fewer than six (6) months in advance, of any changes in the maintenance of the Directory Listings database or any mechanisms or interfaces, whether industry standard or not, pursuant to which BellSouth will provide Directory Listings to AT&T.

20.8.2 Third Party Access to Directory Listings Database. AT&T authorizes BellSouth to provide Directory Listings of AT&T end users to third parties on terms and conditions that comport with the Communications Act and the relevant FCC rules and orders and on the same terms and conditions applicable to the release of Directory Listings of BellSouth end users to third parties. This data shall not be used for any other purpose than publishing a directory.

20.8.3 Co-operation. AT&T and BellSouth agree to co-operate in good faith to resolve any issue regarding a Directory Listing raised by an AT&T end user (e.g., publication of a nonpublished Directory Listing, etc.) Upon request by either Party, AT&T and BellSouth will in good faith mutually develop a process for escalating and resolving such issues. Neither BellSouth nor its agent shall be liable for the content and accuracy of any SLI provided by AT&T under this Agreement.

21 Insurance Requirements

21.1 Insurance

21.1.1 AT&T shall, at its sole cost and expense, procure, maintain, and keep in force insurance as specified in this Section and with the exception of insurance policies issued by AT&T's affiliated captive insurance company underwritten by insurance companies licensed to do business in the states applicable under this Agreement and having a Best's Insurance Rating of A-.

21.2 AT&T shall maintain the following specific coverage, with BellSouth as an additional named insured:

21.2.1 Commercial General Liability coverage in the amount of ten million dollars ($10,000,000.00) or a combination of Commercial General Liability and Excess/Umbrella coverage totaling not less than ten million dollars ($10,000,000.00). BellSouth shall be included as an Additional Insured on the Commercial General Liability policy with respect to the activities of AT&T pursuant to this Agreement, for which AT&T has legally assumed responsibility.

21.2.2 Business auto coverage for all owned, non-owned, hired and leased vehicles with limits of not less than $1,000,000 per occurrence and in the aggregate.

21.2.3 Statutory Workers Compensation coverage and Employers Liability coverage in the amount of one hundred thousand dollars ($100,000.00) each accident, one hundred thousand dollars ($100,000.00) each employee by disease, and five hundred thousand dollars ($500,000.00) policy limit by disease.

21.2.4 All Risk Property coverage on a full replacement cost basis insuring all of AT&T's real and personal property situated on or within BellSouth's Central Office location(s).

21.2.5 AT&T may elect to purchase business interruption and contingent business interruption.

21.3 The limits set forth in Section 21.2 above may be increased by BellSouth from time to time during the term of this Agreement upon thirty (30) calendar days notice to AT&T to at least such minimum limits as shall then be customary with respect to comparable occupancy of BellSouth structures.

21.4 To the extent of BellSouth's coverage as an additional insured under AT&T's Commercial General and Excess/Umbrella Liability policies, such policies shall be deemed to be primary and not contributing to any similar coverage purchased by BellSouth. All insurance must be in effect on or before the date equipment is delivered to BellSouth's Premises and shall remain in effect for the term of this Attachment or until all AT&T's property has been removed from BellSouth's Premises, whichever period is longer. If AT&T fails to maintain required coverage, BellSouth may, after a cure period of thirty (30) business days following AT&T's receipt of written notice from BellSouth of such lapse, pay the premiums thereon and seek reimbursement of same from AT&T.

21.5 AT&T shall submit certificates of insurance reflecting the coverage required pursuant to this Section a minimum of ten (10) business days prior to the commencement of any work pursuant to this agreement. Failure to meet this interval may result in construction and equipment installation delays. AT&T shall arrange for BellSouth to receive thirty (30) calendar days' advance notice of cancellation from AT&T's insurance company except for cancellation due to the nonpayment of premium, for which such advance notice shall be ten (10) calendar days. AT&T shall forward a certificate of insurance and notice of cancellation/non-renewal to BellSouth at the following address:

BellSouth Telecommunications, Inc.

Attn.: Risk Management Coordinator

17H53 BellSouth Center

675 W. Peachtree Street

Atlanta, Georgia 30375

21.7 AT&T must conform to recommendations made by BellSouth's fire insurance company to the extent BellSouth has agreed to, or shall hereafter agree to, such recommendations.

21.8 Self-Insurance. If AT&T's net worth, including that of its parent company, AT&T Corporation, exceeds five hundred million dollars ($500,000,000), AT&T may elect to self insure in lieu of obtaining any of the insurance required in Section 21. AT&T shall provide the most recent audited financial statements for AT&T Corporation to BellSouth thirty (30) calendar days prior to the commencement of any work pursuant to this agreement and each year thereafter, as soon as reasonably practical following publication. The ability to self-insure shall continue so long as AT&T meets all of the requirements of this Section. If AT&T subsequently no longer satisfies this Section, AT&T is required to purchase insurance as indicated by Section 21.2.

21.9 The net worth requirements set forth in Section 21.8 may be increased by BellSouth from time to time during the term of this Attachment upon thirty (30) calendar days' notice to AT&T to at least such minimum limits as shall then be customary with respect to comparable occupancy of BellSouth structures.

21.10 Failure to comply with the provisions of this Section will be deemed a material breach of this Attachment.

21.11 Costs

21.11.1 Except as otherwise specified in this Agreement, the Act, or any Commission order, each Party shall be responsible for all costs and expenses that it incurs to comply with its obligations under this Agreement.

22 Disaster Recovery

22.1 The Party's Disaster Recovery Plan is as set forth in Exhibit A of this Agreement.

23 Other Matters

23.1 The Parties acknowledge that certain provisions of this Agreement incorporate by reference various BellSouth documents and industry publications (collectively referred to herein as the "Provisions"), and that such Provisions may change from time to time. The Parties agree that: 1) Any change or alteration made as a result of the Change Control Process (CCP), a revision to ANSI or Telcordia guidelines or OBF guidelines or where AT&T agrees in writing to such change or alteration, any such change or any change or alteration shall become effective with respect to AT&T pursuant to the terms of the notice to AT&T via the applicable Internet website posting; 2) Any

changes that (a) alter, amend or conflict with any term of this Agreement, (b) changes any charge or rate, or the application of any charge or rate, specified in this Agreement, will be implemented through amendment of this Agreement; and 3) any changes made by BellSouth to any other provisions that are referenced in this agreement, may be challenged by AT&T and such challenge will be subject to the dispute resolution provisions of this Agreement. In the event the Parties disagree as to whether any alteration or amendment described in this Section is effective as to AT&T pursuant to the requirements of this Section, either Party may file a complaint with the Commission pursuant to the dispute resolution provisions of this Agreement, and until a Commission issues its order regarding the dispute, the change shall not take effect. Challenges made by AT&T after changes have become effective will be subject to the dispute resolution provisions, however the change shall remain in place until a Commission issues its order regarding the dispute.

24 Miscellaneous

24.1 Delegation or Assignment

24.1.1 Subject to Section 24.2.1 below, BellSouth may not assign any of its rights or delegate any of its obligations under this Agreement without the prior written consent of AT&T, which will not be unreasonably withheld. Notwithstanding the foregoing, BellSouth may assign its rights and benefits and delegate its duties and obligations under this Agreement without the consent of AT&T to a 100 percent owned Affiliate company of BellSouth if such Affiliate provides wireline communications, provided that the performance of any such assignee is guaranteed by the assignor. Any prohibited assignment or delegations shall be null and void. In no event shall BellSouth require that this Agreement be assigned to an Affiliate of AT&T in order for such Affiliate to order Interconnection, Network Elements or services hereunder.

24.2 **Transfer of Exchanges**

24.2.1 If BellSouth wishes to sell, exchange, or otherwise transfer ownership of any exchange in a portion of Mississippi served by BellSouth as an incumbent local exchange carrier ("Transfer") to a third party, BellSouth shall first apply to and gain written approval of the Mississippi Commission. As used in the previous sentence, the term incumbent local exchange carrier shall be defined as stated in 47 U.S.C. § 251(h). BellSouth will use its best efforts to facilitate discussions between AT&T and the purchaser or transferee of the exchange. BellSouth is not obligated to advocate on behalf of AT&T for the purchaser or transferee to adopt the interconnection terms.

24.3 **Subcontracting**

24.3.1 If any Party's obligation under this Agreement is performed by a subcontractor or Affiliate, the Party subcontracting the obligation nevertheless shall remain fully responsible for the performance of this Agreement in accordance with its terms, and shall be solely responsible for payments due its subcontractors or Affiliate. In entering into any contract, subcontract or other agreement for the performance of any obligation under this Agreement, the Party shall not enter into any agreement that it would not enter into if the supplier was performing services directly for said Party.

24.4 Nonexclusive Remedies

24.4.1 Except as otherwise expressly provided in this Agreement, each of the remedies provided under this Agreement is cumulative and is in addition to any remedies that may be available at law or in equity.

24.5 No Third-Party Beneficiaries

24.5.1 Except as may be specifically set forth in this Agreement, this Agreement does not provide and shall not be construed to provide third Parties with any remedy, claim, liability, reimbursement, cause of action, or other privilege.

24.6 Referenced Documents

24.6.1 Whenever any provision of this Agreement refers to a technical reference, technical publication, AT&T Practice, BellSouth Practice, any publication of telecommunications industry administrative or technical standards, or any other document specifically incorporated into this Agreement, it will be deemed to be a reference to the most recent version or edition (including any amendments, supplements, addenda, or successors) of such document that is in effect, and will include the most recent version or edition (including any amendments, supplements, addenda, or successors) of each document incorporated by reference in such a technical reference, technical publication, AT&T Practice, BellSouth Practice, or publication of industry standards (unless AT&T elects otherwise). Should there be an inconsistency between or among publications or standards, the Parties shall mutually agree upon which requirement shall apply. If the Parties cannot reach agreement, the matter shall be handled pursuant to Section 16 of the General Terms and Conditions of this Agreement.

24.7 Applicable Law

24.7.1 The validity of this Agreement, the construction and enforcement of its terms, and the interpretation of the rights and duties of the Parties shall be governed by the laws of the State of Georgia other than as to conflicts of laws, except insofar as federal law may control any aspect of this Agreement, in which case

federal law shall govern such aspect. The Parties submit to personal jurisdiction in Atlanta, Georgia, and waive any objections to a Georgia venue.

24.8 Amendments or Waivers

24.8.1 Except as otherwise provided in this Agreement, no amendment or waiver of any provision of this Agreement, and no consent to any default under this Agreement, shall be effective unless the same is in writing and signed by an officer of the Party against whom such amendment, waiver or consent is claimed. In addition, no course of dealing or failure of a Party strictly to enforce any term, right or condition of this Agreement shall be construed as a waiver of such term, right or condition. By entering into this Agreement, neither Party waives any rights granted to them pursuant to the Act.

24.9 Severability

24.9.1 If any term, condition or provision of this Agreement is held to be invalid or unenforceable for any reason, such invalidity or unenforceability shall not invalidate the entire Agreement, unless such construction would be unreasonable. The Agreement shall be construed as if it did not contain the invalid or unenforceable provision or provisions, and the rights and obligations of each Party shall be construed and enforced accordingly; provided, however, that in the event such invalid or unenforceable provision or provisions are essential elements of this Agreement and substantially impair the rights or obligations of either Party, the Parties shall promptly negotiate a replacement provision or provisions.

24.10 Entire Agreement

24.10.1 This Agreement, which shall include the Attachments, Appendices and other documents referenced herein, constitutes the entire Agreement between the Parties concerning the subject matter hereof and supersedes any prior agreements, representations, statements, negotiations, understandings, proposals or undertakings, oral or written, with respect to the subject matter expressly set forth herein.

24.11 Survival of Obligations

24.11.1 Any liabilities or obligations of a Party for acts or omissions prior to the cancellation or termination of this Agreement, any obligation of a Party under the provisions regarding indemnification, Confidential Information, limitations on liability, and any other provisions of this Agreement which, by their terms, are contemplated to survive (or to be performed after) termination of this Agreement, shall survive cancellation or termination thereof.

24.12 Executed in Counterparts

24.12.1 This Agreement may be executed in any number of counterparts, each of which shall be deemed an original, but such counterparts shall together constitute one and the same instrument.

24.13 Headings of No Force or Effect

24.13.1 The headings of Articles and Sections of this Agreement are for convenience of reference only, and shall in no way define, modify or restrict the meaning or interpretation of the terms or provisions of this Agreement.

24.14 Notice of Network Changes

24.14.1 BellSouth shall comply with the requirements of 47 C.F.R. § 51.325, et seq., regarding notice to AT&T of any network change that will affect AT&T's performance or ability to provide service or that will affect BellSouth's interoperability with AT&T. This section shall be construed in accordance with the obligations contained within 47 C.F.R. § 51.325, et seq.

24.15 Court Ordered Requests for Call Detail Records and Other Subscriber Information

24.15.1 To the extent technically feasible, BellSouth maintains call detail records for AT&T end users for limited time periods and can respond to subpoenas and court ordered requests for this information. BellSouth shall maintain such information for AT&T end users for the same length of time it maintains such information for its own end users.

24.15.2 AT&T agrees that BellSouth will respond to subpoenas and court ordered requests delivered directly to BellSouth for the purpose of providing call detail records when the targeted telephone numbers belong to AT&T end users. Billing for such requests will be generated by BellSouth and directed to the law enforcement agency initiating the request.

24.15.3 Where BellSouth is providing to AT&T telecommunications services for resale then AT&T agrees that in those cases where AT&T receives subpoenas or court ordered requests regarding targeted telephone numbers belonging to AT&T end users, if AT&T does not have the requested information, AT&T will advise the law enforcement agency initiating the request to redirect the subpoena or court ordered request to BellSouth. Where the request has been forwarded to BellSouth, billing for call detail information will be generated by BellSouth and directed to the law enforcement agency initiating the request.

24.15.4 In all other instances, AT&T will provide AT&T end user and/or other customer information that is available to AT&T in response to subpoenas and court orders for their own end user records. When BellSouth receives subpoenas or court ordered requests regarding targeted telephone numbers

belonging to AT&T end users, BellSouth will advise the law enforcement agency initiating the request to redirect the subpoena or court ordered request to AT&T.

24.16 Filing of Agreement

24.16.1 Upon execution of this Agreement, it shall be filed with the appropriate state regulatory agency pursuant to the requirements of Section 252 of the Act. If the regulatory agency imposes any filing or public interest notice fees regarding the filing or approval of the Agreement, the Parties shall equally share the cost of such filing and/or public interest notice fee.

24.17 Other Proceedings

24.17.1 Upon written request by AT&T, BellSouth agrees to negotiate rates, (if appropriate), terms and conditions to incorporate into this Agreement any obligation or commitment regarding interconnection, resale or access to Network Elements made by BellSouth to any state or federal regulatory authority or the U.S. Department of Justice ("Governmental Body") in connection with any merger or regulatory proceeding regarding BellSouth's obligations under the Act, including 47 U.S.C.§ 271 thereunder. If the Parties cannot reach an agreement regarding the rates, terms and conditions, either Party may, within sixty (60) days after receipt of the request from AT&T, petition the state regulatory commission for resolution of the issue(s). The language to be negotiated and incorporated within this Agreement will be effective consistent with the effective date of the commitment or obligation made by BellSouth to the Governmental Body. AT&T's rights pursuant to this Section shall be cumulative with, and not in lieu of or in limitation of, any other rights provided to AT&T under this Agreement.

25. Reservation of Rights

25.1 Execution of the Interconnection Agreement by either Party does not confirm or infer that the executing Party agrees with any decision(s) issued pursuant to the Telecommunications Act of 1996 and the consequences of those decisions on specific language in this Agreement. Neither Party waives its rights to appeal or otherwise challenge any such decision(s) and each Party reserves all of its rights to pursue any and all legal and/or equitable remedies, including appeals of any such decision(s). If such appeals or challenges result in changes in the decision(s), the Parties agree that appropriate modifications to this Agreement will be made promptly to make its terms consistent with those changed decision(s).

General Terms and Conditions
Signature Page

IN WITNESS WHEREOF, the Parties have executed this Agreement the day and year written below.

BellSouth Telecommunications, Inc.

By: Kristen E. Shore

Name: Kristen E. Shore

Title: Director

Date: 3/14/06

AT&T Communications of the Southern States, LLC

By: Stephen G. Huels

Name: Stephen G. Huels

Title: Region Vice President - Global Access Management

Date: 3-09-06

Version: 4Q04 Standard ICA
12/09/04

SC

CCCS 40 of 395

EXHIBIT A
BellSouth Disaster Recovery Plan

CONTENTS

PAGE

1.0 Purpose 4
2.0 Single Point of Contact 4
3.0 Identifying the Problem 4
3.1 Site Control 5
3.2 Environmental Concerns 6
4.0 The Emergency Control Center (ECC) 6
5.0 Recovery Procedures 7
5.1 CLEC Outage 7
5.2 BellSouth Outage 7
5.2.1 Loss of Central Office 8
5.2.2 Loss of a Central Office with Serving Wire Center Functions 8
5.2.3 Loss of a Central Office with Tandem Functions 8
5.2.4 Loss of a Facility Hub 9
5.3 Combined Outage (CLEC and BellSouth Equipment) 9
6.0 T1 Identification Procedures 9
7.0 Acronyms 10

1.0 PURPOSE

In the unlikely event of a disaster occurring that affects BellSouth's long-term ability to deliver traffic to a Competitive Local Exchange Carrier ("CLEC"), general procedures have been developed to hasten the recovery process. Since each location is different and could be affected by an assortment of potential problems, a detailed recovery plan is impractical. However, in the process of reviewing recovery activities for specific locations, some basic procedures emerge that appear to be common in most cases.

These general procedures should apply to any disaster that affects the delivery of traffic for an extended time period. Each CLEC will be given the same consideration during an outage and service will be restored as quickly as possible.

This document will cover the basic recovery procedures that would apply to every CLEC.

2.0 SINGLE POINT OF CONTACT

When a problem is experienced, regardless of the severity, the BellSouth Network Management Center ("NMC") will observe traffic anomalies and begin monitoring the situation. Controls will be appropriately applied to insure the sanity of BellSouth's network; and, in the event that a switch or facility node is lost, the NMC will attempt to circumvent the failure using available reroutes.

BellSouth's NMC will remain in control of the restoration efforts until the problem has been identified as being a long-term outage. At that time, the NMC will contact BellSouth's Emergency Control Center ("ECC") and relinquish control of the recovery efforts. Even though the ECC may take charge of the situation, the NMC will continue to monitor the circumstances and restore traffic as soon as damaged network elements are revitalized.

The telephone number for the BellSouth Network Management Center in Atlanta, as published in Telcordia's National Network Management Directory, is 404-321-2516.

3.0 IDENTIFYING THE PROBLEM

During the early stages of problem detection, the NMC will be able to tell which CLECs are affected by the catastrophe. Further analysis and/or first hand observation will determine if the disaster has affected CLEC equipment only; BellSouth equipment only or a combination. The initial restoration activity will be largely determined by the equipment that is affected.

Once the nature of the disaster is determined and after verifying the cause of the problem, the NMC will initiate reroutes and/or transfers that are jointly agreed upon by the affected CLECs' NMC and the BellSouth NMC. The type and percentage of controls used will depend upon available network capacity. Controls necessary to stabilize the situation will be invoked and the NMC will attempt to re-establish as much traffic as possible.

For long term outages, recovery efforts will be coordinated by the ECC. Traffic controls will continue to be applied by the NMC until facilities are re-established. As equipment is made

available for service, the ECC will instruct the NMC to begin removing the controls and allow traffic to resume.

3.1 SITE CONTROL

In the total loss of building use scenario, what likely exists will be a smoking pile of rubble. This rubble will contain many components that could be dangerous. It could also contain any personnel on the premises at the time of the disaster. For these reasons, the local fire marshal with the assistance of the police will control the site until the building is no longer a threat to surrounding properties and the companies have secured the site from the general public.

During this time, the majority owner of the building should be arranging for a demolition contractor to mobilize to the site with the primary objective of reaching the cable entrance facility for a damage assessment. The results of this assessment would then dictate immediate plans for restoration, both short term and permanent.

In a less catastrophic event, i.e., the building is still standing and the cable entrance facility is usable, the situation is more complex. The site will initially be controlled by local authorities until the threat to adjacent property has diminished. Once the site is returned to the control of the companies, the following events should occur.

An initial assessment of the main building infrastructure systems (mechanical, electrical, fire and life safety, elevators, and others) will establish building needs. Once these needs are determined, the majority owner should lead the building restoration efforts. There may be situations where the site will not be totally restored within the confines of the building. The companies must individually determine their needs and jointly assess the cost of permanent restoration to determine the overall plan of action.

Multiple restoration trailers from each company will result in the need for designated space and installation order. This layout and control is required to maximize the amount of restoration equipment that can be placed at the site, and the priority of placements.

Care must be taken in this planning to insure other restoration efforts have logistical access to the building. Major components of telephone and building equipment will need to be removed and replaced. A priority for this equipment must also be jointly established to facilitate overall site restoration. (Example: If the AC switchgear has sustained damage, this would be of the highest priority in order to regain power, lighting, and HVAC throughout the building.)

If the site will not accommodate the required restoration equipment, the companies would then need to quickly arrange with local authorities for street closures, rights of way or other possible options available.

3.2 ENVIRONMENTAL CONCERNS

In the worse case scenario, many environmental concerns must be addressed. Along with the police and fire marshal, the state environmental protection department will be on site to monitor the situation.

Items to be concerned with in a large central office building could include:

1. Emergency engine fuel supply. Damage to the standby equipment and the fuel handling equipment could have created "spill" conditions that have to be handled within state and federal regulations.

2. Asbestos containing materials that may be spread throughout the wreckage. Asbestos could be in many components of building, electrical, mechanical, outside plant distribution, and telephone systems.

3. Lead and acid. These materials could be present in potentially large quantities depending upon the extent of damage to the power room.

4. Mercury and other regulated compounds resident in telephone equipment.

5. Other compounds produced by the fire or heat.

Once a total loss event occurs at a large site, local authorities will control immediate clean up (water placed on the wreckage by the fire department) and site access.

At some point, the companies will become involved with local authorities in the overall planning associated with site clean up and restoration. Depending on the clean up approach taken, delays in the restoration of several hours to several days may occur.

In a less severe disaster, items listed above are more defined and can be addressed individually depending on the damage.

In each case, the majority owner should coordinate building and environmental restoration as well as maintain proper planning and site control.

4.0 THE EMERGENCY CONTROL CENTER (ECC)

The ECC is located in the Colonnade Building in Birmingham, Alabama. During an emergency, the ECC staff will convene a group of pre-selected experts to inventory the damage and initiate corrective actions. These experts have regional access to BellSouth's personnel and equipment and will assume control of the restoration activity anywhere in the nine-state area.

In the past, the ECC has been involved with restoration activities resulting from hurricanes, ice storms and floods. They have demonstrated their capabilities during these calamities as well as

during outages caused by human error or equipment failures. This group has an excellent record of restoring service as quickly as possible.

During a major disaster, the ECC may move emergency equipment to the affected location, direct recovery efforts of local personnel and coordinate service restoration activities with the CLECs. The ECC will attempt to restore service as quickly as possible using whatever means is available; leaving permanent solutions, such as the replacement of damaged buildings or equipment, for local personnel to administer.

Part of the ECC's responsibility, after temporary equipment is in place, is to support the NMC efforts to return service to the CLECs. Once service has been restored, the ECC will return control of the network to normal operational organizations. Any long-term changes required after service is restored will be made in an orderly fashion and will be conducted as normal activity.

5.0 RECOVERY PROCEDURES

The nature and severity of any disaster will influence the recovery procedures. One crucial factor in determining how BellSouth will proceed with restoration is whether or not BellSouth's equipment is incapacitated. Regardless of whose equipment is out of service, BellSouth will move as quickly as possible to aid with service recovery; however, the approach that will be taken may differ depending upon the location of the problem.

5.1 CLEC OUTAGE

For a problem limited to one CLEC (or a building with multiple CLECs), BellSouth has several options available for restoring service quickly. For those CLECs that have agreements with other CLECs, BellSouth can immediately start directing traffic to a provisional CLEC for completion. This alternative is dependent upon BellSouth having concurrence from the affected CLECs.

Whether or not the affected CLECs have requested a traffic transfer to another CLEC will not impact BellSouth's resolve to re-establish traffic to the original destination as quickly as possible.

5.2 BELLSOUTH OUTAGE

Because BellSouth's equipment has varying degrees of impact on the service provided to the CLECs, restoring service from damaged BellSouth equipment is different. The outage will probably impact a number of Carriers simultaneously. However, the ECC will be able to initiate immediate actions to correct the problem.

A disaster involving any of BellSouth's equipment locations could impact the CLECs, some more than others. A disaster at a Central Office (“CO”) would only impact the delivery of traffic to and from that one location, but the incident could affect many Carriers. If the Central Office is a Serving Wire Center (“SWC”), then traffic from the entire area to those Carriers served from that switch would also be impacted. If the switch functions as an Access Tandem, or there is a tandem in the building, traffic from every CO to every CLEC could be interrupted. A disaster that destroys a facility hub could disrupt various traffic flows, even though the switching equipment may be unaffected.

The NMC would be the first group to observe a problem involving BellSouth's equipment. Shortly after a disaster, the NMC will begin applying controls and finding re-routes for the completion of as much traffic as possible. These reroutes may involve delivering traffic to alternate Carriers upon receiving approval from the CLECs involved. In some cases, changes in translations will be required. If the outage is caused by the destruction of equipment, then the ECC will assume control of the restoration.

5.2.1 Loss of a Central Office

When BellSouth loses a Central Office, the ECC will

a) Place specialists and emergency equipment on notice;

b) Inventory the damage to determine what equipment and/or functions are lost;

c) Move containerized emergency equipment and facility equipment to the stricken area, if necessary;

d) Begin reconnecting service for Hospitals, Police and other emergency agencies; and

e) Begin restoring service to CLECs and other customers.

5.2.2 Loss of a Central Office with Serving Wire Center Functions

The loss of a Central Office that also serves as a SWC will be restored as described in section 5.2.1.

5.2.3 Loss of a Central Office with Tandem Functions

When BellSouth loses a Central Office building that serves as an Access Tandem and as a SWC, the ECC will

a) Place specialists and emergency equipment on notice;

b) Inventory the damage to determine what equipment and/or functions are lost;

c) Move containerized emergency equipment and facility equipment to the stricken area, if necessary;

d) Begin reconnecting service for Hospitals, Police and other emergency agencies;

e) Re-direct as much traffic as possible to the alternate access tandem (if available) for delivery to those CLECs utilizing a different location as a SWC;

f) Begin aggregating traffic to a location near the damaged building. From this location, begin re-establishing trunk groups to the CLECs for the delivery of traffic normally found on the direct trunk groups. (This aggregation point may be the alternate access tandem location or another CO on a primary facility route.)

g) Begin restoring service to CLECs and other customers.

5.2.4 Loss of a Facility Hub

In the event that BellSouth loses a facility hub, the recovery process is much the same as above. Once the NMC has observed the problem and administered the appropriate controls, the ECC will assume authority for the repairs. The recovery effort will include

a) Placing specialists and emergency equipment on notice;

b) Inventorying the damage to determine what equipment and/or functions are lost;

c) Moving containerized emergency equipment to the stricken area, if necessary;

d) Reconnecting service for Hospitals, Police and other emergency agencies; and

e) Restoring service to CLECs and other customers. If necessary, BellSouth will aggregate the traffic at another location and build temporary facilities. This alternative would be viable for a location that is destroyed and building repairs are required.

5.3 COMBINED OUTAGE (CLEC AND BELLSOUTH EQUIPMENT)

In some instances, a disaster may impact BellSouth's equipment as well as the CLECs'. This situation will be handled in much the same way as described in section 5.2.3. Since BellSouth and the CLECs will be utilizing temporary equipment, close coordination will be required.

6.0 T1 IDENTIFICATION PROCEDURES

During the restoration of service after a disaster, BellSouth may be forced to aggregate traffic for delivery to a CLEC. During this process, T1 traffic may be consolidated onto DS3s and may become unidentifiable to the Carrier. Because resources will be limited, BellSouth may be forced to "package" this traffic entirely differently then normally received by the CLECs. Therefore, a method for identifying the T1 traffic on the DS3s and providing the information to the Carriers is required.

7.0 ACRONYMS

CO	-	Central Office (BellSouth)
DS3	-	Facility that carries 28 T1s (672 circuits)
ECC	-	Emergency Control Center (BellSouth)
CLEC	-	Competitive Local Exchange Carrier
NMC	-	Network Management Center
SWC	-	Serving Wire Center (BellSouth switch)
T1	-	Facility that carries 24 circuits

Hurricane Information

During a hurricane, BellSouth will make every effort to keep CLECs updated on the status of our network. Information centers will be set up throughout BellSouth Telecommunications. These centers are not intended to be used for escalations, but rather to keep the CLEC informed of network related issues, area damages and dispatch conditions, etc.

Hurricane-related information can also be found on line at http://www.interconnection.bellsouth.com/network/disaster/dis_resp.htm. Information concerning Mechanized Disaster Reports can also be found at this website by clicking on CURRENT MDR REPORTS or by going directly to http://www.interconnection.bellsouth.com/network/disaster/mdrs.htm.

BST Disaster Management Plan

BellSouth maintenance centers have geographical and redundant communication capabilities. In the event of a disaster removing any maintenance center from service another geographical center would assume maintenance responsibilities. The contact numbers will not change and the transfer will be transparent to the CLEC.

Attachment 1

Resale

Table of Contents

1. Discount Rates 3

2. Definition of Terms 3

3. General Provisions 4

4. BellSouth's Provision of Services to AT&T 8

5. Maintenance of Services 9

6. Discontinuance of Service 10

7. Operator Services (Operator Call Processing and Directory Assistance) 10

8. Line Information Database (LIDB) 14

9. RAO Hosting 14

10. Optional Daily Usage File (ODUF) 14

11. Enhanced Optional Daily Usage File (EODUF) 14

Resale Restrictions **Exhibit A**

Line Information Database (LIDB) Storage Agreemt **Exhibit B**

Optional Daily Usage File (ODUF) **Exhibit C**

Enhanced Option Daily Usage File (EODUF) **Exhibit D**

Resale Discounts and Rates **Exhibit E**

RESALE

1. Discount Rates

1.1 The discount rates applied to AT&T purchases of BellSouth Telecommunications Services for the purpose of resale shall be as set forth in Exhibit E. Such discounts have been determined by the applicable Commission to reflect the costs avoided by BellSouth when selling a service for wholesale purposes.

1.2 The telecommunications services available for purchase by AT&T for the purposes of resale to AT&T's End Users shall be available at BellSouth's tariffed rates less the discount set forth in Exhibit E to this Agreement and subject to the exclusions and limitations set forth in Exhibit A to this Agreement. In no event shall AT&T be required to agree to volume or term commitments as a condition for obtaining Resold services at wholesale rates.

2. Definition of Terms

2.1 COMPETITIVE LOCAL EXCHANGE COMPANY (CLEC) means a telephone company certificated by the Commission to provide local exchange service within BellSouth's franchised area and is not an incumbent Local Exchange Carrier.

2.2 CUSTOMER OF RECORD means the entity responsible for placing application for service; requesting additions, rearrangements, maintenance or discontinuance of service; payment in full of charges incurred such as non-recurring, monthly recurring, toll, directory assistance, etc.

2.3 DEPOSIT means assurance provided by a customer in the form of cash, surety bond or bank letter of credit to be held by BellSouth.

2.4 END USER means the ultimate user of the Telecommunications Service.

2.5 END USER CUSTOMER LOCATION means the physical location of the premises where an End User makes use of the telecommunications services.

2.6 NEW SERVICES means functions, features or capabilities that are not currently offered by BellSouth. This includes packaging of existing services or combining a new function, feature or capability with an existing service.

2.7 RESALE means an activity wherein a certificated CLEC, such as AT&T, subscribes to the telecommunications services of BellSouth and then offers those telecommunications services to the public.

3. General Provisions

3.1 All of the negotiated rates, terms and conditions set forth in this Attachment pertain to the resale of BellSouth's retail telecommunications services and other services specified in this Attachment. Subject to effective and applicable FCC and Commission rules and orders, BellSouth shall make available to AT&T for resale those telecommunications services BellSouth makes available, at retail to subscribers, pursuant to its General Subscriber Services Tariff and Private Line Services Tariff, who are not telecommunications carriers.

3.1.1 When AT&T provides Resale service in a cross boundary area (areas that are part of the local serving area of another state's exchange) the rates, regulations and discounts for the tariffing state will apply. Billing will be from the serving state. For purposes of this agreement, the tariffing state is defined as the state the central office is in that provides dialtone. The serving state is defined as the state where the end user is located.

3.2 AT&T may purchase resale services from BellSouth for its own use in operating its business. The resale discount will apply to those services under the following conditions:

3.2.1 AT&T must resell services to other End Users.

3.2.2 AT&T cannot be a competitive local exchange telecommunications company for the single purpose of selling to itself.

3.2.3 The provision of services by BellSouth to AT&T does not constitute a joint undertaking for the furnishing of any service.

3.3 AT&T will be the customer of record for all services purchased from BellSouth. Except as specified herein, BellSouth will take orders from, bill and receive payment from AT&T for said services.

3.4 AT&T will be BellSouth's single point of contact for all services purchased pursuant to this Agreement. BellSouth shall have no contact with the End User except to the extent provided for herein. Each Party shall provide to the other a nation wide (50 states) toll-free contact number for purposes of repair and maintenance.

3.5 BellSouth will continue to bill the End User for any services that the End User specifies it wishes to receive directly from BellSouth. BellSouth may directly serve any End User within the service area of AT&T. BellSouth will continue to market directly its own telecommunications products and services and in doing so may establish independent relationships with End Users of AT&T. Neither Party shall interfere with the right of any person or entity to obtain service directly from the other Party.

3.5.1 When an End User of AT&T or BellSouth elects to change his/her carrier to the other Party, both Parties agree to release the End User's service to the other Party concurrent with the due date of the service order, which shall be established based on the standard interval for the End User's requested service as set forth in the BellSouth Product and Services Interval Guide.

3.5.2 When either Party contacts an End User who has placed, or whose selected carrier has placed on the End User's behalf, an order to change the End User's service provider, the Party will comply with all applicable orders of the state Commissions regarding such contact.

3.6 Current telephone numbers may normally be retained by the End User and are assigned to the service furnished. However, neither Party nor the End User has a property right to the telephone number or any other call number designation associated with services furnished by BellSouth, and no right to the continuance of service through any particular central office. BellSouth reserves the right to change such numbers, or the central office designation associated with such numbers, or both, in accordance with BellSouth practices and procedures on a nondiscriminatory basis.

3.7 Service is furnished subject to the condition that it will not be used for any unlawful purpose.

3.8 Service will be discontinued if any law enforcement agency advises that the service being used is in violation of the law.

3.9 BellSouth can refuse service when it has grounds to believe that service will be used in violation of the law.

3.10 BellSouth will cooperate with law enforcement agencies with subpoenas and court orders relating to AT&T's End Users, pursuant to Section 6 of the General Terms and Conditions.

3.11 If AT&T or its End Users utilize a BellSouth resold telecommunications service in a manner other than that for which the service was originally intended as described in BellSouth's retail tariffs, AT&T has the responsibility to notify BellSouth. BellSouth will only provision and maintain said service consistent with the terms and conditions of the tariff describing said service.

3.12 Facilities and/or equipment utilized by BellSouth to provide service to AT&T remain the property of BellSouth.

3.13 White page directory listings for AT&T End Users will be provided in accordance with Section 20 of the General Terms and Conditions.

3.14 Service Ordering and Operational Support Systems (OSS)

3.14.1 AT&T must order services through resale interfaces, i.e., the Local Carrier Service Center (LCSC) and/or appropriate Complex Resale Support Group (CRSG) pursuant to this Agreement. BellSouth has developed and made available the interactive interfaces by which AT&T may submit a Local Service Request (LSR) electronically as set forth in Attachment 2 of this Agreement. Service orders will be in a standard format designated by BellSouth.

3.14.2 LSRs submitted by means of one of these interactive interfaces will incur an OSS electronic charge as set forth in Exhibit E to this Agreement. An individual LSR will be identified for billing purposes by its Purchase Order Number (PON). LSRs submitted by means other than one of these interactive interfaces (Mail, fax, courier, etc.) will incur a manual order charge as set forth in Exhibit E to this Agreement. Supplements or clarifications to a previously billed LSR will not incur another OSS charge.

3.14.3 Denial/Restoral OSS Charge. In the event AT&T provides a list of End Users to be denied and restored, rather than an LSR, each location on the list will require a separate PON and therefore will be billed as one LSR per location.

3.14.4 Cancellation OSS Charge. AT&T will incur an OSS charge for an accepted LSR that is later canceled.

3.15 Where available to BellSouth's End Users, BellSouth shall provide the following telecommunications services at a discount to allow for voice mail services**:**

- Message Waiting Indicator ("MWI"), stutter dialtone and message waiting light feature capabilities
- Call Forward Busy Line ("CF/B")
- Call Forward Don't Answer ("CF/DA")
- Call Forward on Busy/Don't Answer ("CF/B/DA)
- Simple Message Desk Interface – Enhanced ("SMDI-E")
- Simple Message Desk Interface ("SMDI")
- Foreign Exchange ("FX") Interconnect Lines (DS0 and T1) with Multi-Line Hunt Groups ("MLHG"), DID

3.15.1 Further, BellSouth messaging services set forth in BellSouth's Messaging Service Information Package shall be made available for resale without the wholesale discount.

3.16 BellSouth shall provide branding for, or shall unbrand, voice mail services for AT&T per the Bona Fide Request/New Business Request process as set forth in Attachment 10 of this Agreement.

3.17 BellSouth's Inside Wire Maintenance Service Plan is available for resale at rates, terms and conditions as set forth by BellSouth and without the wholesale discount.

3.18 In the event AT&T acquires an end user whose service is provided pursuant to a BellSouth Special Assembly, BellSouth shall make available to AT&T that Special Assembly at the wholesale discount at AT&T's option. The costs will be provided to AT&T prior to providing the service. Such costs could include both recurring and non-recurring charges. AT&T shall be responsible for all terms and conditions of such Special Assembly including but not limited to termination liability if applicable.

3.19 BellSouth shall provide 911/E911 for AT&T End Users in the same manner that it is provided to BellSouth End Users. BellSouth shall provide and validate AT&T End User information to the PSAP. BellSouth shall use its service order process to update and maintain, on the same schedule that it uses for its End Users, the AT&T End User service information in the Automatic Location Identification/Location Information (:"ALI/DMS") databases used to support 911/E911 services.

3.20 BellSouth shall bill, and AT&T shall pay, the End User line charge associated with implementing Number Portability as set forth in BellSouth's FCC No. 1 tariff. This charge is not subject to the wholesale discount.

3.21 Pursuant to 47 CFR Section 51.617, BellSouth shall bill to AT&T, and AT&T shall pay, the End User common line charges identical to the End User common line charges BellSouth bills its End Users.

3.22 BellSouth will notify AT&T 30 days in advance via Internet posting of any changes in the terms and conditions under which it offers telecommunications services to its retail end users, pursuant to Commission Orders, that AT&T is purchasing for resale to its End Users that increases the prices of such services or proposed the discontinuance of any such services or the function and features associated with such services in whole or in part. AT&T recognizes that certain revisions may occur between the time BellSouth notifies AT&T of a change pursuant to this Section and BellSouth's tariff filing of such change. BellSouth shall notify AT&T of such revisions consistent with BellSouth's internal notification process, but AT&T accepts the consequences of such mid-stream changes as an uncertainty of doing business and, therefore, will not hold BellSouth responsible for any resulting inconvenience or cost incurred by AT&T unless caused by the intentional misconduct of BellSouth for the purposes of this Section. With regard to any other information of general applicability to CLECs, BellSouth will also post changes to business processes and policies applicable to existing end

user services not being purchased by AT&T for resale, notices of new service offerings, and any changes to existing service offerings not being purchased by AT&T for resale, or otherwise not requiring an amendment to this Agreement.

3.23 Where BellSouth discontinues a Resale Telecommunications Service, AT&T shall enjoy the same rights (e.g. transition or grandfather period) that BellSouth's own retail End Users may be subject to with respect to the service.

3.24 BellSouth and AT&T shall provide local and toll dialing parity to each other with no unreasonable dialing delays. The post-dial delay (time elapsed between the last digit dialed and the first network response), call completion rate and transmission quality experienced by an AT&T End User is at last equal in quality to that experienced by a similarly situated BellSouth End User. Except for the loss of features that may be occasioned by the use of remote call forwarding or other number portability technologies, the AT&T End User may retain its local telephone number with no loss of features or functionality according to the provisions in Attachment 5. Dialing parity shall be provided for all originating telecommunications services that require dialing to route a call. BellSouth and AT&T shall permit similarly situated telephone exchange service end users to dial the same number of digits to make a local telephone call notwithstanding the identity of the end user's or the called party's telecommunication service provider.

4. BellSouth's Provision of Services to AT&T

4.1 Resale of BellSouth services shall be as follows:

4.1.1 The resale of telecommunications services shall be limited to users and uses conforming to the class of service restrictions.

4.1.2 Hotel and Hospital PBX services are the only telecommunications services available for resale to Hotel/Motel and Hospital End Users, respectively. Similarly, Access Line Service for Customer Provided Coin Telephones is the only local service available for resale to Payphone Service Provider (PSP) customers. Shared Tenant Service customers can only be sold those local exchange access services available in BellSouth's A23 Shared Tenant Service Tariff in the states of Florida, Georgia, North Carolina and South Carolina, and in A27 in the states of Alabama, Kentucky, Louisiana, Mississippi and Tennessee.

4.1.3 BellSouth reserves the right to periodically audit services purchased by AT&T to establish compliance with the terms and conditions set forth above. Such audit shall not occur more than once in a calendar year. AT&T shall make any and all records and data available to BellSouth or BellSouth's auditors on a reasonable basis. BellSouth shall bear the cost of said audit. Any information provided by AT&T for purposes of such audit shall be deemed Confidential Information pursuant to the General Terms and Conditions of this Agreement.

4.2 Subject to Exhibit A hereto, resold services can only be used in the same manner as specified in BellSouth's Tariffs. Resold services are subject to the same terms and conditions as are specified for such services when furnished to an individual End User of BellSouth in the appropriate section of BellSouth's Tariffs. Specific tariff features (e.g. a usage allowance per month) shall not be aggregated across multiple resold services.

4.3 AT&T may resell services within the service area as authorized by its certificate of operation approved by the Commission.

4.4 If AT&T cancels an order for resold services, any costs incurred by BellSouth in conjunction with provisioning of such order will be recovered in accordance with BellSouth's General Subscriber Services Tariffs and Private Line Services Tariffs.

4.5 **Service Jointly Provisioned with an Independent Company or Competitive Local Exchange Company Areas**

4.5.1 When AT&T resells a BellSouth private line service that BellSouth is jointly provisioning with an ICO, the parties agree that the discount is not applicable on the ICO portion of the service.

5. Maintenance of Services

5.1 Services resold pursuant to this Attachment and BellSouth's General Subscriber Service Tariff and Private Line Service Tariff and facilities and equipment provided by BellSouth shall be maintained by BellSouth.

5.2 AT&T or its End Users may not rearrange, move, disconnect, remove or attempt to repair any facilities owned by BellSouth except with the written consent of BellSouth.

5.3 AT&T accepts responsibility to notify BellSouth of situations that arise that may result in a service problem.

5.4 AT&T will contact the appropriate repair centers in accordance with procedures established by BellSouth.

5.5 For all repair requests, AT&T shall adhere to BellSouth's prescreening guidelines prior to referring the trouble to BellSouth.

5.6 BellSouth will bill AT&T for handling troubles that are found not to be in BellSouth's network pursuant to its standard time and material charges. The standard time and material charges will be no more than what BellSouth charges to its retail End Users for the same services.

5.7 BellSouth reserves the right to contact AT&T's End Users, if deemed necessary, for maintenance purposes.

6. Annoyance Calls

6.1 BellSouth will continue to process calls made to the Annoyance Call Center and will advise AT&T when it is determined that annoyance calls are originated from one of its End User's locations. BellSouth shall be indemnified, defended and held harmless by AT&T and/or the End User against any claim, loss or damage arising from providing this information to AT&T. It is the responsibility of AT&T to take the corrective action necessary with its End Users who make annoying calls. Failure to do so will result in BellSouth's disconnecting the End User's service pursuant to Attachment 7 of this Agreement, incorporated herein by reference.

7. Operator Services (Operator Call Processing and Directory Assistance)

7.1 Operator Call Processing provides: (1) operator handling for call completion (for example, collect, third number billing, and manual calling-card calls). (2) operator or automated assistance for billing after the end user has dialed the called number (for example, calling card calls); and (3) special services including but not limited to Busy Line Verification and Emergency Line Interrupt (ELI), Emergency Agency Call, Operator-assisted Directory Assistance, and rate quotes.

7.1.1 Upon request for BellSouth Operator Call Processing, BellSouth shall:

7.1.2 Process 0+ and 0- dialed local calls

7.1.2 .2 Process 0+ and 0- intraLATA toll calls.

7.1.3 Process calls that are billed to AT&T end user's calling card that can be validated by BellSouth.

7.1.4 Process person-to-person calls.

7.1.5 Process collect calls.

7.1.6 Provide the capability for callers to bill a third party and shall also process such calls.

7.1.7 Process station-to-station calls.

7.1.8 Process Busy Line Verify and Emergency Line Interrupt requests.

7.1.9 Process emergency call trace originated by Public Safety Answering Points.

7.1.10 Process operator-assisted directory assistance calls.

7.1.11 Adhere to equal access requirements, providing AT&T local end users the same IXC access that BellSouth provides its own operator service.

7.1.12 Exercise at least the same level of fraud control in providing Operator Service to AT&T that BellSouth provides for its own operator service.

7.1.13 Perform Billed Number Screening when handling Collect, Person-to-Person, and Billed-To-Third-Party calls.

7.1.14 Direct End User account and other similar inquiries to the customer service center designated by AT&T.

7.1.15 Provide call records to AT&T in accordance with ODUF standards.

7.1.16 The interface requirements shall conform to the interface specifications for the platform used to provide Operator Services as long as the interface conforms to industry standards.

7.2 Directory Assistance Service

7.2.1 Directory Assistance Service provides local and non-local end user telephone number listings with the option to complete the call at the caller's direction separate and distinct from local switching.

7.2.2 Directory Assistance Service shall provide up to two listing requests per call, if available and if requested by AT&T's end user. BellSouth shall provide caller-optional directory assistance call completion service at rates set forth in BellSouth's General Subscriber Services Tariff to one of the provided listings.

7.3 Directory Assistance Service Updates

7.3.1 BellSouth shall update end user listings changes daily via the Directory Assistance Database. In addition, BellSouth will provide service to AT&T that is equal to the service it provides to itself and its end users. These changes include:

7.3.2 New end user connections

7.3.3 End user disconnections

7.3.4 End user address changes

7.3.5 These updates shall also be provided for non-listed and non-published numbers for use in emergencies.

7.4 Branding for Operator Call Processing and Directory Assistance

7.4.1 BellSouth's branding feature provides a definable announcement to AT&T end users using Directory Assistance (DA)/ Operator Call Processing (OCP) prior to placing such end users in queue or connecting them to an available operator or automated operator system. This feature allows AT&T's name on whose behalf

BellSouth is providing Directory Assistance and/or Operator Call Processing. Rates for the branding features are set forth in Exhibit E of this Attachment.

7.4.2 BellSouth offers three branding offering options to AT&T when ordering BellSouth's Directory Assistance and Operator Call Processing: BellSouth Branding, Unbranding and Custom Branding.

7.4.3 Upon receipt of the branding order from AT&T, the order is considered firm after ten (10) business days. Should AT&T decide to cancel the order, written notification to AT&T's BellSouth Account Executive is required. If AT&T decides to cancel after ten (10) business days from receipt of the branding order, AT&T shall pay all charges per the branding order as set forth in Exhibit E to this Attachment.

7.4.4 Branding via Originating Line Number Screening (OLNS)

7.4.4.1 BellSouth Branding, Unbranding and Custom Branding are also available for Directory Assistance, Operator Call Processing or both via OLNS software. When utilizing this method of Unbranding or Custom Branding AT&T shall not be required to purchase dedicated trunking.

7.4.4.2 BellSouth Branding is the default branding offering.

7.4.4.3 For BellSouth to provide Unbranding or Custom Branding via OLNS software for Operator Call Processing or for Directory Assistance, AT&T must have its Operating Company Number ("OCN(s)") and telephone numbers reside in BellSouth's LIDB; however, a BellSouth LIDB Storage Agreement is not required. To Implement Unbranding and Custom Branding via OLNS software, AT&T must submit a manual order form which requires, among other things, AT&T's OCN and a forecast for the traffic volume anticipated for each BellSouth TOPS during the peak busy hour. AT&T shall provide updates to such forecast on a quarterly basis and at any time such forecasted traffic volumes are expected to change significantly. Upon AT&T's purchase of Unbranding and Custom Branding using OLNS software for any particular TOPS, all AT&T end users served by that TOPS will receive the Unbranded "no announcement" or the Custom Branded announcement. Orders for Unbranding or Custom Branding via OLNS software shall be completed in approximately sixty (60) days.

7.4.4.4 Rates for Unbranding and Custom Branding via OLNS software for Directory Assistance and for Operator Call Processing are as set forth in Exhibit E of this Attachment. In addition to the charges for Unbranding and Custom Branding via OLNS software, AT&T shall continue to pay BellSouth applicable labor and other charges for the use of BellSouth's Directory Assistance and Call Processing platforms as set forth in Exhibit E of this Attachment.

7.4.5 Selective Call Routing using Line Class Codes (SCR-LCC)

7.4.5.1 Where AT&T resells BellSouth's services and utilizes an operator services provider other than BellSouth, BellSouth will route AT&T's end user calls to that provider through Selective Call Routing.

7.4.5.2 Selective Call Routing using Line Class Codes (SCR-LCC) provides the capability for AT&T to have its OCP/DA calls routed to BellSouth's OCP/DA platform for BellSouth provided Custom Branded or Unbranded OCP/DA or to its own or an alternate OCP/DA platform for Self-Branded OCP/DA. SCR-LCC is only available if line class code capacity is available in the requested BellSouth end office switches.

7.4.5.3 Custom Branding for Directory Assistance is not available for certain classes of service, including but not limited to Hotel/Motel services, WATS service and certain PBX services.

7.4.5.4 Where available, AT&T specific and unique line class codes are programmed in each BellSouth end office switch where AT&T intends to service end users with customized OCP/DA branding. The line class codes specifically identify AT&T's end users so OCP/DA calls can be routed over the appropriate trunk group to the requested OCP/DA platform. Additional line class codes are required in each end office if the end office serves multiple NPAs (i.e., a unique LCC is required per NPA), and/or if the end office switch serves multiple rate areas and AT&T intends to provide AT&T-branded OCP/DA to its end users in these multiple rate areas.

7.4.5.5 BellSouth Branding is the default branding offering.

7.4.5.6 SCR-LCC supporting Custom Branding and Self Branding require AT&T to order dedicated transport and trunking from each BellSouth end office identified by AT&T, either to the BellSouth Traffic Operator Position System (TOPS) for Custom Branding or to the AT&T Operator Service Provider for Self Branding. Separate trunk groups are required for Operator Services and for Directory Assistance. Rates for transport and trunks are set forth in applicable BellSouth Tariffs.

7.4.5.7 The rates for SCR-LCC are as set forth in Exhibit E of this Attachment. There is a nonrecurring charge for the establishment of each Line Class Code in each BellSouth central office.

7.4.5.8 Unbranded Directory Assistance and/or Operator Call Processing calls ride common trunk groups provisioned by BellSouth from those end offices identified by AT&T to the BellSouth Tops. The calls are routed to "No Announcement."

7.4.6 Customized Branding includes charges for the recording of the branding announcement and the loading of the audio units in each TOPS Switch and Network Applications Vehicle (NAV) equipment for which AT&T requires service.

7.4.6.1 Directory Assistance customized branding uses:

7.4.6.2 the recording of AT&T

7.4.6.3 the loading of the recording in each switch.

7.4.6.4 Operator Call Processing customized branding uses:

7.4.6.5 the recording of AT&T

7.4.6.6 the loading of the recording in each switch.

7.4.6.7 the loading on the Network Applications Vehicle (NAV). All NAV shelves within the region where the End User is offering service must be loaded.

8. Line Information Database (LIDB)

8.1 BellSouth will store in its Line Information Database (LIDB) records relating to service only in the BellSouth region. The LIDB Storage Agreement is included in this Attachment as Exhibit B.

9. RAO Hosting

9.1 RAO Hosting is not required for resale in the BellSouth region.

10. Optional Daily Usage File (ODUF)

10.1 The Optional Daily Usage File (ODUF) Agreement with terms and conditions is included in this Attachment as Exhibit C. Rates for ODUF are as set forth in Exhibit E of Attachment 1.

11. Enhanced Optional Daily Usage File (EODUF)

11.1 The Enhanced Optional Daily Usage File (EODUF) service Agreement with terms and conditions is included in this Attachment as Exhibit D. Rates for EODUF are as set forth in Exhibit E of Attachment 1.

EXCLUSIONS AND LIMITATIONS ON SERVICES AVAILABLE FOR RESALE (Note 3)

	Type of Service	AL		FL		GA		KY		LA		MS		NC		SC		TN	
		Resale	Discount	Resale	Discount	Resale	Discount	Resale	Discount	Resale	Discount	Resale	Discount	Resale	Discount	Resale	Discount	Resale	Discount
1	Grandfathered Services (Note 1)	Yes	Yes	Yes	Yes	Yes	Yes	Yes	Yes	Yes	Yes	Yes	Yes	Yes	Yes	Yes	Yes	Yes	Yes
2	Promotions - > 90 Days (Note 2)	Yes	Yes	Yes	Yes	Yes	Yes	Yes	Yes	Yes	Yes	Yes	Yes	Yes	Yes	Yes	Yes	Yes	Yes
3	Promotions - ≤ 90 Days (Note 2)	Yes	No	Yes	No	Yes	No	Yes	No	Yes	No	Yes	No	Yes	No	Yes	No	Yes	No
4	Lifeline/Link Up Services	Yes	Yes	Yes	Yes	Yes	Yes	No	No	Yes	Yes	Yes	Yes	Yes	Yes	Yes	Yes	Yes	Yes
5	911/E911 Services	Yes	Yes	Yes	Yes	Yes	Yes	Yes	Yes	No	No	Yes	Yes	Yes	Yes	Yes	Yes	Yes	Yes
6	N11 Services	Yes	Yes	Yes	Yes	Yes	Yes	No	No	No	No	Yes	Yes	Yes	Yes	No	No	Yes	Yes
7	MemoryCall®Service	Yes	No	Yes	No	Yes	No	Yes	No	Yes	No	Yes	No	Yes	No	Yes	No	Yes	No
8	Mobile Services	Yes	No	Yes	No	Yes	No	Yes	No	Yes	No	Yes	No	Yes	No	Yes	No	Yes	No
9	Federal Subscriber Line Charges	Yes	No	Yes	No	Yes	No	Yes	No	Yes	No	Yes	No	Yes	No	Yes	No	Yes	No
10	Non-RecurCharges	Yes	Yes	Yes	Yes	Yes	Yes	Yes	Yes	Yes	Yes	Yes	Yes	Yes	Yes	Yes	Yes	Yes	No
11	End User Line Chg-Number Portability	Yes	No	Yes	No	Yes	No	Yes	No	Yes	No	Yes	No	Yes	No	Yes	No	Yes	No
12	Public Telephone Access Svc (PTAS)	Yes	Yes	Yes	Yes	Yes	Yes	Yes	Yes	Yes	Yes	Yes	Yes	Yes	Yes	Yes	No	Yes	Yes
13	Inside Wire Maint Service Plan	Yes	No	Yes	No	Yes	No	Yes	No	Yes	No	Yes	No	Yes	No	Yes	No	Yes	No

	Applicable Notes:
1.	**Grandfathered services** can be resold only to existing subscribers of the grandfathered service.
2.	Where available for resale, **promotions** will be made available only to End Users who would have qualified for the promotion had it been provided by BellSouth directly.
3.	Some of BellSouth's local exchange and toll telecommunications services are not available in certain central offices and areas.

LINE INFORMATION DATA BASE (LIDB)

RESALE STORAGE AGREEMENT

I. Definitions (from Addendum)

A. Billing number - a number used by BellSouth for the purpose of identifying an account liable for charges. This number may be a line or a special billing number.

B. Line number - a ten-digit number assigned by BellSouth that identifies a telephone line associated with a resold local exchange service.

C. Special billing number - a ten-digit number that identifies a billing account established by BellSouth in connection with a resold local exchange service.

D. Calling Card number - a billing number plus PIN number assigned by BellSouth.

E. PIN number - a four-digit security code assigned by BellSouth that is added to a billing number to compose a fourteen-digit calling card number.

F. Toll billing exception indicator - associated with a billing number to indicate that it is considered invalid for billing of collect calls or third number calls or both, by AT&T.

G. Billed Number Screening - refers to the query service used to determine whether a toll billing exception indicator is present for a particular billing number.

H. Calling Card Validation - refers to the query service used to determine whether a particular calling card number exists as stated or otherwise provided by a caller.

I. Billing number information - information about billing number or Calling Card number as assigned by BellSouth and toll billing exception indicator provided to BellSouth by AT&T.

J. Get-Data - refers to the query service used to determine, at a minimum, the Account Owner and/or Regional Accounting Office for a line number. This query service may be modified to provide additional information in the future.

K. Originating Line Number Screening ("OLNS") - refers to the query service used to determine the billing, screening and call handling indicators, station type and Account Owner provided to BellSouth by AT&T for originating line numbers.

L. Account Owner - name of the local exchange telecommunications company that is providing dialtone on a subscriber line.

II. General

A. This Agreement sets forth the terms and conditions pursuant to which BellSouth agrees to store in its LIDB certain information at the request of AT&T and pursuant to which BellSouth, its LIDB customers and AT&T shall have access to such information. In addition, this Agreement sets forth the terms and conditions for AT&T's provision of billing number information to BellSouth for inclusion in BellSouth's LIDB. AT&T understands that BellSouth provides access to information in its LIDB to various telecommunications service providers pursuant to applicable tariffs and agrees that information stored at the request of AT&T, pursuant to this Agreement, shall be available to those telecommunications service providers. The terms and conditions contained herein shall hereby be made a part of this Resale Agreement upon notice to AT&T's account team and/or Local Contract Manager to activate this LIDB Storage Agreement. The General Terms and Conditions of the Resale Agreement shall govern this LIDB Storage Agreement. The terms and conditions contained in the attached Addendum are hereby made a part of this LIDB Storage Agreement as if fully incorporated herein.

B. BellSouth will provide responses to on-line, call-by-call queries to billing number information for the following purposes:

1. Billed Number Screening

   BellSouth is authorized to use the billing number information to determine whether AT&T has identified the billing number as one that should not be billed for collect or third number calls.

2. Calling Card Validation

   BellSouth is authorized to validate a 14-digit Calling Card number where the first 10 digits are a line number or special billing number assigned by BellSouth, and where the last four digits (PIN) are a security code assigned by BellSouth.

3. OLNS

   BellSouth is authorized to provide originating line screening information for billing services restrictions, station type, call handling indicators, presubscribed interLATA and local carrier and account owner on the lines of AT&T from which a call originates.

4. GetData

   BellSouth is authorized to provide, at a minimum, the account owner and/or Regional Accounting Office information on the lines of AT&T indicating the local service provider and where billing records are to be sent for settlement purposes. This query service may be modified to provide additional information in the future.

5. Fraud Control

   BellSouth will provide seven days per week, 24-hours per day, fraud monitoring on Calling Cards, bill-to-third and collect calls made to numbers in BellSouth's LIDB, provided that such information is included in the LIDB query. BellSouth will establish fraud alert thresholds and will notify AT&T of fraud alerts so that AT&T may take action it deems appropriate.

III. Responsibilities of the Parties

A. BellSouth will administer all data stored in the LIDB, including the data provided by AT&T pursuant to this Agreement, in the same manner as BellSouth's data for BellSouth's End User customers. BellSouth shall not be responsible to AT&T for any lost revenue which may result from BellSouth's administration of the LIDB pursuant to its established practices and procedures as they exist and as they may be changed by BellSouth in its sole discretion from time to time.

B. Billing and Collection Customers

BellSouth currently has in effect numerous billing and collection agreements with various interexchange carriers and billing clearing houses and as such these billing and collection customers ("B&C Customers") query BellSouth's LIDB to determine whether to accept various billing options from End Users. Until such time as BellSouth implements in its LIDB and its supporting systems the means to differentiate AT&T's data from BellSouth's data, the following shall apply:

(1) BellSouth will identify AT&T end user originated long distance charges and will return those charges to the interexchange carrier as not covered by the existing B&C agreement. AT&T is responsible for entering into the appropriate agreement with interexchange carriers for handling of long distance charges by their end users.

(2) BellSouth shall have no obligation to become involved in any disputes between AT&T and B&C Customers. BellSouth will not issue adjustments for charges billed on behalf of any B&C Customer to AT&T. It shall be the responsibility of AT&T and the B&C Customers to negotiate and arrange for any appropriate adjustments.

IV. Fees for Service and Taxes

A. AT&T will not be charged a fee for storage services provided by BellSouth to AT&T, as described in this LIDB Resale Storage Agreement.

B. Sales, use and all other taxes (excluding taxes on BellSouth's income) determined by BellSouth or any taxing authority to be due to any federal, state or local taxing jurisdiction with respect to the provision of the service set forth herein will be paid by AT&T in accordance with the tax provisions set forth in the General Terms and Conditions of this Agreement.

OPTIONAL DAILY USAGE FILE

1 Upon written request from AT&T, BellSouth will provide the Optional Daily Usage File ("ODUF") service to AT&T pursuant to the terms and conditions set forth in this section.

2 AT&T shall furnish all relevant information required by BellSouth for the provision of the Optional Daily Usage File.

3 Optional Daily Usage File ("ODUF") contains completed messages and operator attempted messages that were carried over the BellSouth Network and processed by BellSouth but belongs to AT&T. BellSouth will provide AT&T usage data for AT&T customers only and will not submit other local carrier usage data as part of the AT&T usage data. In the rare event an order error causes BellSouth to deliver other carriers messages in the AT&T ODUF feed, BellSouth will send AT&T killer/cancel records to back out such records and if billed, BellSouth will credit all charges associated with such records.

Charges for delivery of the Optional Daily Usage File will appear on AT&Ts' monthly bills for the previous month's usage. The charges are as set forth in Exhibit A to this Attachment 7, incorporated herein by this reference.

4 The Optional Daily Usage File will contain both rated and unrated messages. All messages will be in the standard Alliance for Telecommunications Industry Solutions ("ATIS") EMI record format.

5 Messages that error in the billing system of AT&T will be the responsibility of AT&T. If, however, AT&T should encounter significant volumes of errored messages that prevent processing by the AT&T within its systems, BellSouth will work with AT&T to determine the source of the errors and the appropriate resolution.

6. The following specifications shall apply to the Optional Daily Usage Feed.

6.1 Usage To Be Transmitted

6.1.1 The following messages recorded by BellSouth will be transmitted to AT&T:

- message recording for per use/per activation type services (examples: Three Way Calling, Verify, Interrupt, Call Return, ETC.)
- measured Local
- Directory Assistance messages
- intraLATA Toll
- WATS & 800 Service
-N11
-Information Service Provider Messages
-Operator Services Messages
-Operator Services Message Attempted Calls (UNE only)
-Credit/Cancel Records
-Usage for Voice Mail Message Service

6.1.2 Rated Incollects (originated in BellSouth and from other companies) can also be on Optional Daily Usage File. Rated Incollects will be intermingled with BellSouth recorded rated and unrated usage. Rated Incollects will not be packed separately.

6.1.3 BellSouth will perform duplicate record checks on records processed to Optional Daily Usage File. Any duplicate messages detected will be deleted and not sent to AT&T.

6.1.4 In the event that AT&T detects a duplicate on Optional Daily Usage File they receive from BellSouth, AT&T will drop the duplicate message (AT&T will not return the duplicate to BellSouth).

6.2 Physical File Characteristics

6.2.1 The Optional Daily Usage File will be distributed to AT&T via an agreed medium with CONNECT:Direct being the preferred transport method. The Daily Usage File will be a variable block format (The data on the Daily Usage File will be in a non-compacted EMI format (175 byte format plus modules). It will be created on a daily basis (Monday through Friday except holidays). Details such as dataset name and delivery schedule will be addressed during negotiations of the distribution medium. There will be a maximum of one dataset per workday per OCN.

6.2.2 Data circuits (private line or dial-up) may be required between BellSouth and AT&T for the purpose of data transmission. Where a dedicated line is required, AT&T will be responsible for ordering the circuit, overseeing its installation and coordinating the installation with BellSouth. AT&T will also be responsible for any charges associated with this line. Equipment required

on the BellSouth end to attach the line to the mainframe computer and to transmit successfully ongoing will be negotiated on a case by case basis. Where a dial-up facility is required, dial circuits will be installed in the BellSouth data center by BellSouth and the associated charges assessed to AT&T. Additionally, all message toll charges associated with the use of the dial circuit by AT&T will be the responsibility of AT&T. Associated equipment on the BellSouth end, including a modem, will be negotiated on a case by case basis between the parties. All equipment, including modems and software, that is required on AT&T end for the purpose of data transmission will be the responsibility of AT&T.

6.3 Packing Specifications

6.3.1 A pack will contain a minimum of one message record or a maximum of 99,999 message records plus a pack header record and a pack trailer record. One transmission can contain a maximum of 99 packs and a minimum of one pack.

6.3.2 The OCN, From RAO, and Invoice Number will control the invoice sequencing. The From RAO will be used to identify to AT&T which BellSouth RAO is sending the message. BellSouth and AT&T will use the invoice sequencing to control data exchange. BellSouth will be notified of sequence failures identified by AT&T and resend the data as appropriate.

THE DATA WILL BE PACKED USING ATIS EMI RECORDS.

6.4 Pack Rejection

6.4.1 AT&T will notify BellSouth within one business day of rejected packs (via the mutually agreed medium). Packs could be rejected because of pack sequencing discrepancies or a critical edit failure on the Pack Header or Pack Trailer records (i.e., out-of-balance condition on grand totals, invalid data populated). Standard ATIS EMI Error Codes will be used. AT&T will not be required to return the actual rejected data to BellSouth. Rejected packs will be corrected and retransmitted to AT&T by BellSouth.

6.5 Control Data

AT&T will send one confirmation record per pack that is received from BellSouth. This confirmation record will indicate AT&T received the pack and the acceptance or rejection of the pack. Pack Status Code(s) will be populated using standard ATIS EMI error codes for

packs that were rejected by AT&T for reasons stated in the above section.

6.6 Testing

6.6.1 Upon request from AT&T, BellSouth shall send test files to AT&T for the Optional Daily Usage File. The parties agree to review and discuss the file's content and/or format. For testing of usage results, BellSouth shall request that AT&T set up a production (LIVE) file. The live test may consist of AT&T's employees making test calls for the types of services AT&T requests on the Optional Daily Usage File. These test calls are logged by AT&T, and the logs are provided to BellSouth. These logs will be used to verify the files. Testing will be completed within 30 calendar days from the date on which the initial test file was sent.

ENHANCED OPTIONAL DAILY USAGE FILE

1 Upon written request from AT&T, BellSouth will provide the Enhanced Optional Daily Usage File ("EODUF") service to AT&T pursuant to the terms and conditions set forth in this section. EODUF will only be sent to existing ODUF subscribers who request the EODUF option.

2 AT&T shall furnish all relevant information required by BellSouth for the provision of the Enhanced Optional Daily Usage File.

3 The EODUF will provide usage data for local calls originating from resold Flat Rate Business and Residential Lines.

4 Charges for delivery of the Enhanced Optional Daily Usage File will appear on AT&Ts' monthly bills for the previous month's usage. The charges are as set forth in Exhibit A to this Attachment 7, incorporated herein by this reference.

5 All messages will be in the standard Alliance for Telecommunications Industry Solutions ("ATIS") EMI record format.

6 Messages that error in the billing system of AT&T will be the responsibility of AT&T. If, however, AT&T should encounter significant volumes of errored messages that prevent processing by AT&T within its systems, BellSouth will work with AT&T to determine the source of the errors and the appropriate resolution.

7 The following specifications shall apply to the Optional Daily Usage File.

7.1 Usage To Be Transmitted

7.1.1 The following messages recorded by BellSouth will be transmitted to AT&T:

Customer usage data for flat rated local call originating from CLEC end user lines (1FB or 1FR). The EODUF record for flat rate messages will include:

Date of Call
From Number
To Number
Connect Time
Conversation Time

Method of Recording
From RAO
Rate Class
Message Type
Billing Indicators
Bill to Number

7.1.2 BellSouth will perform duplicate record checks on EODUF records processed to Optional Daily Usage File. Any duplicate messages detected will be deleted and not sent to AT&T.

7.1.3 In the event that AT&T detects a duplicate on Enhanced Optional Daily Usage File they receive from BellSouth, AT&T will drop the duplicate message (AT&T will not return the duplicate to BellSouth).

7.2 Physical File Characteristics

7.2.1 The Enhanced Optional Daily Usage File will be distributed to AT&T over their existing ODUF File. The EODUF messages will be intermingled among AT&T's ODUF messages. The EODUF will be a variable block format. The data on the EODUF will be in a non-compacted EMI format (175 byte format plus modules). It will be created on a daily basis (Monday through Friday except holidays).

7.2.2 Data circuits (private line or dial-up) may be required between BellSouth and AT&T for the purpose of data transmission. Where a dedicated line is required, AT&T will be responsible for ordering the circuit, overseeing its installation and coordinating the installation with BellSouth. AT&T will also be responsible for any charges associated with this line. Equipment required on the BellSouth end to attach the line to the mainframe computer and to transmit successfully ongoing will be negotiated on a case by case basis. Where a dial-up facility is required, dial circuits will be installed in the BellSouth data center by BellSouth and the associated charges assessed to AT&T. Additionally, all message toll charges associated with the use of the dial circuit by AT&T will be the responsibility of AT&T. Associated equipment on the BellSouth end, including a modem, will be negotiated on a case by case basis between the parties. All equipment, including modems and software, that is required on AT&T end for the purpose of data transmission will be the responsibility of AT&T.

7.3 Packing Specifications

7.3.1 A pack will contain a minimum of one message record or a maximum of 99,999 message records plus a pack header record and a pack trailer record. One transmission can contain a maximum of 99 packs and a minimum of one pack.

7.3.2 The Operating Company Number ("OCN"), From Revenue Accounting Office ("RAO"), and Invoice Number will control the invoice sequencing. The From RAO will be used to identify to AT&T which BellSouth RAO that is sending the message. BellSouth and AT&T will use the invoice sequencing to control data exchange. BellSouth will be notified of sequence failures identified by AT&T and resend the data as appropriate.

THE DATA WILL BE PACKED USING ATIS EMI RECORDS.

RESALE DISCOUNTS & RATES - South Carolina														Attachment: 1 Exh E			
CATEGORY		RATE ELEMENTS	Interim	Zone	BCS	USOC	RATES($)					Svc Order Submitted Elec per LSR	Svc Order Submitted Manually per LSR	Incremental Charge - Manual Svc Order vs. Electronic-1st	Incremental Charge - Manual Svc Order vs. Electronic-Add'l	Incremental Charge - Manual Svc Order vs. Electronic-Disc 1st	Incremental Charge - Manual Svc Order vs. Electronic-Disc Add'l
							Rec	Nonrecurring		Nonrecurring Disconnect		OSS Rates($)					
								First	Add'l	First	Add'l	SOMEC	SOMAN	SOMAN	SOMAN	SOMAN	SOMAN
APPLICABLE DISCOUNTS																	
		Residence %					14.80										
		Business %					14.80										
		CSAs %					8.98										
OPERATIONS SUPPORT SYSTEMS (OSS) - "REGIONAL RATES"																	
	NOTE: (1) CLEC should contact its contract negotiator if it prefers the "state specific" OSS charges as ordered by the State Commissions. The OSS charges currently contained in this rate exhibit are the BellSouth "regional" service ordering charges. CLEC may elect either the state specific Commission ordered rates for the service ordering charges, or CLEC may elect the regional service ordering charge, however, CLEC can not obtain a mixture of the two regardless if CLEC has a interconnection contract established in each of the 9 states.															
		OSS - Electronic Service Order Charge, Per Local Service Request (LSR) - Resale Only				SOMEC		4.03	0.00	3.41	0.00						
		OSS - Manual Service Order Charge, Per Local Service Request (LSR) - Resale Only				SOMAN		18.86	0.00	18.86	0.00						
DIRECTORY ASSISTANCE CUSTOM BRANDING ANNOUNCEMENT via OLNS SOFTWARE																	
		Recording of DA Custom Branded Announcement						3,000.00	3,000.00								
		Loading of DA Custom Branded Anouncement per Switch per OCN						1,170.00	1,170.00								
DIRECTORY ASSISTANCE UNBRANDING via OLNS SOFTWARE																	
		Loading of DA per OCN (1 OCN per Order)						420.00	420.00								
		Loading of DA per Switch per OCN						16.00	16.00								
OPERATOR ASSISTANCE CUSTOM BRANDING ANNOUNCEMENT via OLNS SOFTWARE																	
		Recording of Custom Branded OA Announcement						7,000.00	7,000.00								
		Loading of Custom Branded OA Announcement per shelf/NAV per OCN						500.00	500.00								
		Loading of OA Custom Branded Announcement per Switch per OCN						1,170.00	1,170.00								
OPERATOR ASSISTANCE UNBRANDING via OLNS SOFTWARE																	
		Loading of OA per OCN (Regional)															
ODUF/EODUF SERVICES																	
	OPTIONAL DAILY USAGE FILE (ODUF)																
		ODUF: Recording, per message					0.0000216										
		ODUF: Message Processing, per message					0.004704										
		ODUF: Message Processing, per Magnetic Tape provisioned					48.87										
		ODUF: Data Transmission (CONNECT:DIRECT), per message					0.00010863										
	ENHANCED OPTIONAL DAILY USAGE FILE (EODUF)																
		EODUF: Message Processing, per message					0.258301										

Attachment 2

Network Elements and Other Services

TABLE OF CONTENTS

1 INTRODUCTION 3

2 UNBUNDLED LOOPS 7

3 LINE SHARING 45

4 UNBUNDLED NETWORK ELEMENT COMBINATIONS 51

5 DEDICATED TRANSPORT AND DARK FIBER TRANSPORT 55

6 LINE INFORMATION DATABASE (LIDB) 66

7 AUTOMATIC LOCATION IDENTIFICATION/DATA MANAGEMENT SYSTEM (ALI/DMS) 67

8 SERVICE CREATION ENVIRONMENT AND SERVICE MANAGEMENT SYSTEM (SCE/SMS) ADVANCED INTELLIGENT NETWORK (AIN) ACCESS 68

9 911/E911 69

Rates ..... Exhibit A

Rates ..... Exhibit B

ACCESS TO NETWORK ELEMENTS AND OTHER SERVICES

1 Introduction

1.1 This Attachment sets forth rates, terms and conditions for Network Elements and combinations of Network Elements that BellSouth agrees to offer to AT&T in accordance with its obligations under Section 251(c)(3) of the Act. Additionally, this Attachment sets forth the rates, terms and conditions for other facilities and services BellSouth makes available to AT&T (Other Services). The rates for each Network Element and combination of Network Elements and Other Services are set forth in Exhibit A and B of this Attachment. If no rate is identified in this Agreement, the rate will be as negotiated by the Parties. If AT&T purchases service(s) from a tariff, all terms and conditions and rates as set forth in such tariff shall apply. Additionally, the provision of a particular Network Element or Other Service may require AT&T to purchase other Network Elements or services. In the event of a conflict between this Attachment and any other section or provision of this Agreement, the provisions of this Attachment shall control.

1.1.1 BellSouth shall price each unbundled Network Element separately, and shall offer each unbundled Network Element individually, and in any technically feasible combination with any other Network Element, service or functionality. In no event shall BellSouth require AT&T to purchase any unbundled Network Element in conjunction with any other service or element. BellSouth shall place no use restrictions or other limiting conditions on Network Elements and Combinations purchased by AT&T under the terms of this Agreement, except as provided in 47 CFR 51.309. Notwithstanding the above, if AT&T requests access to a Loop or subloop, NID functionality shall be provided with such Loop and no additional NID charge shall be included.

1.2 For purposes of this Agreement**, "**Network Element**"** is defined to mean a facility or equipment used in the provision of a telecommunications service, as defined by the FCC that BellSouth is obligated to offer AT&T pursuant to section 251(c)(3) of the Act. Such term also includes features, functions and capabilities that are provided by means of such facility or equipment. AT&T shall not obtain a Network Element for the exclusive provision of mobile wireless services or interexchange services. For purposes of this Agreement, combinations of Network Elements shall be referred to as "Combinations."

1.3 BellSouth shall, upon request of AT&T, and to the extent technically feasible, provide to AT&T access to its Network Elements for the provision of AT&T's telecommunications services. If no rate is identified in this Agreement, the rate will be as negotiated by the Parties.

1.4 AT&T may purchase and use Network Elements and Other Services from BellSouth in accordance with 47 C.F.R 51.309, and BellSouth must perform its obligations under 47 C.F.R. 51.309 as well.

1.5 BellSouth shall comply with the requirements as set forth in the technical references within this Attachment 2.

1.6 Conversion of Wholesale Services to Network Elements or Network Elements to Wholesale Services. The conversion process should be a seamless process that does not affect the customer's perception of service quality. Upon request, BellSouth shall convert a wholesale service, or group of wholesale services, to the equivalent Network Element or Combination that is available to AT&T pursuant to Section 251 of the Act and under this Agreement or convert a Network Element or Combination that is available to AT&T pursuant to Section 251 of the Act and under this Agreement to an equivalent wholesale service or group of wholesale services offered by BellSouth (collectively "Conversion"). BellSouth shall charge the applicable nonrecurring switch-as-is rates for Conversions to specific Network Elements or Combinations found in Exhibit A. BellSouth shall also charge the same nonrecurring switch-as-is rates when converting from Network Elements or Combinations. Any rate change resulting from the Conversion will be effective as of the next billing cycle following BellSouth's receipt of a complete and accurate Conversion request from AT&T. A Conversion shall be considered termination for purposes of any tariffed volume and/or term commitments and/or grandfathered status between AT&T and BellSouth. Any change from a wholesale service/group of wholesale services to a Network Element/Combination, or from a Network Element/Combination to a wholesale service/group of wholesale services, that requires a physical rearrangement will not be considered to be a Conversion for purposes of this Agreement. BellSouth will not require physical rearrangements if the Conversion can be completed through record changes only. Orders for Conversions will be handled in accordance with the guidelines set forth in the Ordering Guidelines and Processes and CLEC Information Packages as referenced in Sections 1.10 and 1.10.1 below.

1.6.1 Prior to submitting an order pursuant to this Agreement for high capacity (DS1 or above) Dedicated Transport or high capacity Loops, AT&T shall undertake a reasonably diligent inquiry to determine whether AT&T is entitled to unbundled access to such Network Elements in accordance with the terms of this Agreement. By submitting any such order, AT&T self-certifies that to the best of AT&T's knowledge, the high capacity Dedicated Transport or high capacity Loop requested is available as a Network Element pursuant to this Agreement. Upon receiving such order, BellSouth shall process the request in reliance upon AT&T's self-certification. To the extent BellSouth believes that such request does not comply with the terms of this Agreement, BellSouth shall seek dispute resolution in accordance with the General Terms and Conditions of this Agreement.

1.6.2 Except to the extent expressly provided otherwise in this Attachment, AT&T may not maintain unbundled network elements or combinations of unbundled network elements, that are no longer offered pursuant to this Agreement (collectively "Arrangements"). In the event BellSouth determines that AT&T has in place any Arrangements after the Effective Date of this Agreement, BellSouth will provide AT&T with thirty (30) days written notice to disconnect or convert such Arrangements. If AT&T fails to submit orders to disconnect or convert such Arrangements within such thirty (30) day period, BellSouth will transition such circuits to the equivalent tariffed BellSouth service(s). Those circuits identified and transitioned by BellSouth pursuant to this Section 1.6.2 shall be subject to all applicable disconnect charges as set forth in this Agreement and the full nonrecurring charges for installation of the equivalent tariffed BellSouth service as set forth in BellSouth's tariffs. The applicable recurring tariff charge shall apply to each circuit as of the Effective Date of this Agreement.

1.7 The Triennial Review

1.7.1 BellSouth is required to make, in a nondiscriminatory manner, and as set forth in 47 CFR 51.319(a)(8) and 51.319(e)(5), routine network modifications to transmission facilities used by AT&T when the requested facility has already been constructed. Routine network modifications will be made without regard to whether the Loop or facility being accessed was constructed on behalf, or in accordance with, the specifications of any carrier. Where BellSouth has recovered the costs for a routine network modification through its recurring and nonrecurring charges for the element provided, BellSouth will not seek to double recover such costs.

1.7.1.2 BellSouth's obligation to make routine network modifications applies to all transmission facilities (e.g., Loops and dedicated transport facilities) including, but not limited to, dark fiber facilities.

1.8 Commingling of Services

1.8.1 Commingling means the connecting, attaching, or otherwise linking of a Network Element, or a Network Element combination, to one or more telecommunications services or facilities that AT&T has obtained at wholesale from BellSouth, or the combining of a Network Element or Network Element combination with one or more such wholesale telecommunications services or facilities.

1.8.1.1 Unless otherwise required by an appropriate regulatory agency, BellSouth shall not be obligated to commingle or combine Network Elements or Combinations with any service, network element or other offering that it is obligated to make available only pursuant to Section 271 of the Act. For the purpose of

implementing this section, any change of law shall be accomplished through the process set forth in section 9.3 of the General Terms and Conditions.

1.8.2 Subject to the limitations set forth elsewhere in this Attachment, BellSouth shall not deny access to a Network Element or a combination of Network Elements on the grounds that one or more of the elements: 1) is connected to, attached to, linked to, or combined with such a facility or service obtained from BellSouth; or 2) shares part of BellSouth's network with access services or inputs for mobile wireless services and/or interexchange services; 3) is offered for resale pursuant to Section 251(c) 4 of the Act.

1.8.3 BellSouth shall also permit AT&T to combine any Network Element or Combination of Network Elements provided by BellSouth with compatible network components or services provided by AT&T or by third parties to AT&T to provide telecommunications services to AT&T, its affiliates and to AT&T customers.

1.8.4 In the provisioning of the Network Element circuit connected to a channelized wholesale transport, where AT&T requests that BellSouth perform the commingling, BellSouth shall be subject to the performance measures and penalty provisions of the performance measurement plans approved by the Commission for that particular Network Element.

1.8.5 BellSouth will not "ratchet" a commingled circuit. Unless otherwise agreed to by the Parties, the Network Element portion of such circuit will be billed at the rates set forth in this Agreement and the remainder of the circuit or service will be billed in accordance with BellSouth's tariffed rates.

1.8.6 BellSouth will bill AT&T for multiplexing according to the underlying product consistent with what is ordered by AT&T. For example, if AT&T orders unbundled transport with multiplexing, BellSouth will charge AT&T the unbundled rate for multiplexing. If AT&T orders special access transport with multiplexing, BellSouth will charge AT&T the special access rate for multiplexing. Central Office Channel Interfaces will be billed from the same jurisdictional authorization (agreement or tariff) as the lower grade of service. To the extent that special access DS3 circuits include multiplexing across the entire DS3, no additional DS3/DS1 multiplexing shall be charged for the EELs provisioned on the same DS3.

1.9 If AT&T reports a trouble on a Network Element or Other Service and no trouble actually exists on the BellSouth portion, BellSouth will charge AT&T for any dispatching and testing (both inside and outside the Central Office (CO)) required by BellSouth in order to confirm the working status. AT&T is not obligated to pay for the dispatch if a subsequent (within 10 days of original trouble) new trouble

ticket addressing the same condition is opened and trouble is found on BellSouth's network and corrected.

1.10 For information regarding Ordering Guidelines and Processes for various Network Elements, Combinations and Other Services, AT&T should refer to the "Guides" section of the BellSouth Interconnection Web site.

1.10.1 Additional information may also be found in the individual CLEC Information Packages located at the "CLEC UNE Products" on BellSouth's Interconnection Web site at: www.interconnection.bellsouth.com/guides/html/unes.html.

1.11 Rates

1.11.1 The prices that AT&T shall pay to BellSouth for Network Elements and Other Services are set forth in Exhibit A to this Attachment. If, at its option, AT&T purchases a service(s) from a tariff, all terms and conditions and rates as set forth in such tariff shall apply.

1.11.2 Rates, terms and conditions for order cancellation charges and Service Date Advancement Charges will apply in accordance with Attachment 6 and are incorporated herein by this reference.

1.11.3 If AT&T modifies an order (Order Modification Charge (OMC)) after being sent a Firm Order Confirmation (FOC) from BellSouth, any costs incurred by BellSouth, to accommodate the modification, will be paid by AT&T in accordance with FCC No. 1 Tariff, Section 5.

1.11.4 Fractionalized billing shall apply to all Network Elements and Combinations such that recurring charges will be prorated based upon the number of days that the Network Elements or Combinations are in service. Non-recurring charges shall not be fractionalized.

2 Unbundled Loops

2.1 General

2.1.1 BellSouth shall provide AT&T with nondiscriminatory access to the local Loop on an unbundled basis, in accordance with section 251 (c) (3) of the Act as set forth in 47 CFR 51.319 (a)(1) through (a)(9). The local Loop network element is defined as a transmission facility between a distribution frame (or its equivalent) in an incumbent LEC central office and the Loop demarcation point at an end user customer premises. This element includes all features, functions, and capabilities of such transmission facility, including the network interface device. It also includes all electronics, optronics, and intermediate devices (including repeaters

2.1.2 and load coils) used to establish the transmission path to the end user customer premise as well as any inside wire owned or controlled by the incumbent LEC that is part of that transmission path.

2.1.1.1 The Loop does not include any packet switched features, functions or capabilities.

2.1.1.2 Fiber to the Home (FTTH) Loops are local Loops consisting entirely of fiber optic cable, whether dark or lit, serving an end user's premises or, in the case of predominantly residential multiple dwelling units (MDUs), a fiber optic cable, whether dark or lit, that extends to the MDU minimum point of entry (MPOE). Fiber to the Curb (FTTC) Loops are local Loops consisting of fiber optic cable connecting to a copper distribution plant that is not more than five hundred (500) feet from the end user's premises or, in the case of predominantly residential MDUs, not more than five hundred (500) feet from the MDU's MPOE. The fiber optic cable in a FTTC Loop must connect to a copper distribution plant at a serving area interface from which every other copper distribution subloop also is not more than five hundred (500) feet from the respective end user's premises.

2.1.1.3 In new build (Greenfield) areas, where BellSouth has only deployed Fiber To The Home (FTTH) facilities, or FTTC facilities, BellSouth is under no obligation to provide access to such FTTH and FTTC Loops when BellSouth deploys such a Loop to an end user customer premises that previously has not been served by any Loop facility (FCC Rule).

2.1.1.4 In FTTH/FTTC overbuild situations where BellSouth also has copper Loops, BellSouth will make those copper Loops available to AT&T on an unbundled basis, until such time as BellSouth chooses to retire those copper Loops using the FCC's network disclosure requirements. After the copper Loop facility is retired, BellSouth will offer a 64kbps voice grade channel over its FTTH/FTTC facilities. When BellSouth retires a copper Loop facility currently utilized by AT&T when AT&T uses its central office collocated DSLAM to provide a connection between an end user and an internet service provider, the parties acknowledge that the provision of a 64kbps voice grade channel over BellSouth's FTTH/FTTC facilities will not permit AT&T to continue to provide such a connection to its customer. Consequently, and in order to alleviate this situation, which is anticipated to happen infrequently, when such a copper Loop facility retirement impacts an existing AT&T customer in this manner, BellSouth agrees to provide to AT&T a connection between AT&T's end user and the selected ISP that provides the same functionality that AT&T provided to that end user using the now-retired copper facility, at a rate equal to the rate paid by AT&T for the conditioned copper Loop facility previously used to serve that customer. This provision can only be invoked, during the life of this agreement, to serve up to a total of 50 customers.

2.1.1.5 In FTTH/FTTC overbuild areas where BellSouth has not yet retired copper facilities, BellSouth must maintain the existing copper Loop connected to the

particular customer premises but, is not obligated to ensure that copper Loops in that area are capable of transmitting signals prior to receiving a request for access to such Loops by AT&T. If a request is received by BellSouth for a copper Loop, and the copper facilities have not yet been retired, BellSouth will restore the copper Loop to a serviceable condition, if technically feasible. In these instances of Loop orders in an FTTH/FTTC overbuild area, BellSouth's standard Loop provisioning interval will apply to those copper Loops that BellSouth continues to maintain. For those copper Loops that Bellsouth has not continued to maintain, BellSouth will use its best efforts to meet the standard provisioning intervals. Where BellSouth cannot meet the standard provisioning interval, the order will be handled on a project basis by which the parties will negotiate the applicable provisioning interval.

2.1.1.6 For hybrid Loops, where AT&T seeks access to a hybrid Loop for the provision of broadband services, BellSouth shall provide AT&T with nondiscriminatory access to the time division multiplexing features, functions and capabilities of that hybrid Loop, including DS1 or DS3, on an unbundled basis to establish a complete transmission path between BellSouth's central office and an end user's customer premises.

2.1.1.6.1 When AT&T seeks access to a hybrid Loop for the provision of narrowband services**,** BellSouth shall either provide non-discriminatory access to an entire hybrid Loop capable of voice grade services (i.e. equivalent to DS0 capacity) using time division multiplexing technology or provide nondiscriminatory access to a spare home-run copper Loop serving that customer on an unbundled basis.

2.1.1.7 For purposes of this Agreement, and not by way of limitation, the phrase end user customer premises shall not be interpreted to include such places as a carrier's mobile switching center, base station, cell site, or other similar facility, except to the extent that a carrier may require Loops to such locations for the purpose of providing telecommunications services to its personnel at those locations.

2.1.1.8 Transition for DS1 and DS3 Loops

2.1.1.8.1 For purposes of this Section 2, the Transition Period for the Embedded Base of DS1 and DS3 Loops and for the Excess DS1 and DS3 Loops (defined in 2.1.1.8.3) is the twelve (12) month period beginning March 11, 2005 and ending March 10, 2006.

2.1.1.8.2 For purposes of this Section 2, Embedded Base means DS1 and DS3 Loops that were in service for AT&T as of March 10, 2005 in those wire centers that, as of such date, met the criteria set forth in Section 2.1.1.8.5.1 or 2.1.1.8.5.2. Subsequent disconnects or loss of end users shall be removed from the Embedded Base.

2.1.1.8.3 Excess DS1 and DS3 Loops are those AT&T DS1 and DS3 Loops in service as of March 10, 2005, in excess of the caps set forth in Sections 2.3.6.1 and 2.3.13, respectively. Subsequent disconnects or loss of end users shall be removed from Excess DS1 and DS3 Loops.

2.1.1.8.4 For purposes of this Section 2, a Business Line, Wire Center, and Fiber-Based Collocator are defined in 47 C.F.R. § 51.5.

2.1.1.8.5 Notwithstanding anything to the contrary in this Agreement, and except as set forth in Section 2.1.1.8.12, BellSouth shall make available DS1 and DS3 Loops as described in this Section 2.1.1.8 only for AT&T's Embedded Base during the Transition Period:

2.1.1.8.5.1 DS1 Loops at any location within the service area of a wire center containing 60,000 or more Business Lines and four (4) or more fiber-based collocators.

2.1.1.8.5.2 DS3 Loops at any location within the service area of a wire center containing 38,000 or more Business Lines and four (4) or more fiber-based collocators.

2.1.1.8.6 A list of wire centers meeting the criteria set forth in Sections 2.1.1.8.5.1 and 2.1.1.8.5.2 above as of March 10, 2005 (Initial Wire Center List), is available on BellSouth's Interconnection Services Web site at www.interconnection.bellsouth.com.

2.1.1.8.7 Notwithstanding the Effective Date of this Agreement, during the Transition Period, the rates for AT&T's Embedded Base of DS1 and DS3 Loops and AT&T's Excess DS1 and DS3 Loops described in this Section 2.1.1.8 shall be as set forth in Exhibit B.

2.1.1.8.7.1 On the effective date of this agreement, BellSouth may assess a true up charge as necessary, back to March 11, 2005 to collect any transitional charges applicable to AT&T's Embedded Base of DS1 and DS3 Loops that were not collected for the period between March 11, 2005 and the effective date of this Agreement. Although true up charges may be assessed back to March 11, 2005, no late payments or penalties may be calculated where AT&T timely pays the true up charge within the billing cycle time allotted from receipt of the true up bill.

2.1.1.8.8 The Transition Period shall apply only to (1) AT&T's Embedded Base and (2) AT&T's Excess DS1 and DS3 Loops. AT&T shall not add new DS1 or DS3 Loops as described in this Section 2.1.1.8 pursuant to this Agreement, except pursuant to the self-certification process as set forth in Section 1.6.1 of this Attachment and as set forth in Section 2.1.1.8.12 below.

2.1.1.8.9 Once a wire center exceeds both of the thresholds set forth in Section 2.1.1.8.5.1, no future DS1 Loop unbundling will be required in that wire center.

2.1.1.8.10 Once a wire center exceeds both of the thresholds set forth in Section 2.1.1.8.5.2, no future DS3 Loop unbundling will be required in that wire center.

2.1.1.8.11 No later than December 9, 2005 AT&T shall submit spreadsheet(s) identifying all of the Embedded Base of circuits and Excess DS1 and DS3 Loops to be either disconnected or converted to other BellSouth services pursuant to Section 1.6. The Parties agree to work cooperatively to confirm that the facilities on the spreadsheet are the facilities to be included in AT&T's Embedded Base of circuits and Excess DS1 and DS3 Loops. The Parties shall negotiate a project schedule for the Conversion of the Embedded Base and Excess DS1 and DS3 Loops. BellSouth shall charge the non-recurring switch-as-is rate for these conversions.

2.1.1.8.11.1 If AT&T fails to submit the spreadsheet(s) specified in Section 2.1.1.8.11 above for at least 95% of its Embedded Base and Excess DS1 and DS3 Loops prior to December 9, 2005, BellSouth will identify AT&T's remaining Embedded Base and Excess DS1 and DS3 Loops, if any, and will transition such circuits to the equivalent tariffed BellSouth service(s). Those circuits identified and transitioned by BellSouth pursuant to this Section 2.1.1.8.11.1 shall be subject to all applicable disconnect charges as set forth in this Agreement and the full nonrecurring charges for installation of the equivalent tariffed BellSouth service as set forth in BellSouth's tariffs. If it is determined that AT&T failed to submit spreadsheets or to convert 5% or less of AT&T's Embedded Base and Excess DS1 and DS3 Loops, BellSouth will not convert such 5% or less of its Embedded Base and Excess DS1 and DS3 Loops, but will alert AT&T of the 5% or less of the Embedded Base and Excess DS1 and DS3 Loops that was not converted by AT&T and allow AT&T thirty (30) days to convert such DS1 and DS3 Loops. To the extent that AT&T fails to convert the remaining Embedded Base and Excess DS1 and DS3 Loops within such thirty (30) day period, BellSouth will identify and transition such circuits as described in this paragraph.

2.1.1.8.11.2 For Embedded Base circuits and Excess DS1 and DS3 Loops converted pursuant to Section 2.1.1.8.11 or transitioned pursuant to 2.1.1.8.11.1, the applicable recurring tariff charge shall apply to each circuit as of the earlier of the date each circuit is converted or transitioned, as applicable, or March 11, 2006.

2.1.1.8.12 <u>Modifications and Updates to the Wire Center List and Subsequent Transition Periods</u>

2.1.1.8.12.1 In the event BellSouth identifies additional wire centers that meet the criteria set forth in Section 2.1.1.8.5, but that were not included in the Initial Wire Center List, BellSouth shall include such additional wire centers in a carrier notification letter (CNL). Each such list of additional wire centers shall be considered a "Subsequent Wire Center List".

2.1.1.8.12.2 Effective fourteen (14) days after the date of a BellSouth CNL providing a Subsequent Wire Center List, BellSouth shall not be required to unbundle DS1 and/or DS3 Loops, as applicable, in such additional wire center(s), except pursuant to the self-certification process as set forth in Section 1.6 of this Attachment.

2.1.1.8.12.3 For purposes of Section 2.1.1.8.12, BellSouth shall make available DS1 and DS3 Loops that were in service for AT&T in a wire center on the Subsequent Wire Center List as of the fourteenth (14th) day after the date of BellSouth's CNL identifying the Subsequent Wire Center List (Subsequent Embedded Base) until one hundred and twenty (120) days after the fourteenth (14th) business day from the date of BellSouth's CNL identifying the Subsequent Wire Center List (Subsequent Transition Period).

2.1.1.8.12.4 Subsequent disconnects or loss of end users shall be removed from the Subsequent Embedded Base.

2.1.1.8.12.5 The rates set forth in Exhibit B shall apply to the Subsequent Embedded Base during the Subsequent Transition Period.

2.1.1.8.12.6 No later than sixty (60) days from BellSouth's CNL identifying the Subsequent Wire Center List, AT&T shall submit a spreadsheet(s) identifying the Subsequent Embedded Base of circuits to be disconnected or converted to other BellSouth services. The Parties agree to work cooperatively to confirm that the facilities on the spreadsheet are the facilities to be included in AT&T's Subsequent Embedded Base. The Parties shall negotiate a project schedule for the Conversion of the Subsequent Embedded Base. BellSouth shall charge the non-recurring switch-as-is rate for these conversions.

2.1.1.8.12.6.1 If AT&T fails to submit the spreadsheet(s) specified in Section 2.1.1.8.12.6 above for at least 95% of its Subsequent Embedded Base within sixty (60) days after the date of BellSouth's CNL identifying the Subsequent Wire Center List, BellSouth will identify AT&T's remaining Subsequent Embedded Base, if any, and will transition such circuits to the equivalent tariffed BellSouth service(s). Those circuits identified and transitioned by BellSouth shall be subject to the applicable disconnect charges as set forth in this Agreement and the full nonrecurring charges for installation of the equivalent tariffed BellSouth service as set forth in BellSouth's tariffs. If it is determined that AT&T failed to submit spreadsheets or to convert 5% or less of its Subsequent Embedded Base, BellSouth will not convert such 5% or less of AT&T's Subsequent Embedded Base, but will alert AT&T of the 5% or less of its Subsequent Embedded Base that was not converted by AT&T and allow AT&T thirty (30) days to convert such 5% or less of its Subsequent Embedded Base. To the extent AT&T fails to convert the remaining Subsequent Embedded Base within such thirty (30) day period, BellSouth will identify and transition such circuits as described in this paragraph.

2.1.1.8.12.6.2 For Subsequent Embedded Base circuits converted pursuant to Section 2.1.1.8.12.6 or transitioned pursuant to Section 2.1.1.8.12.6.1, the applicable recurring tariff charges shall apply as of the earlier of the date each circuit is converted or transitioned, as applicable, or the first day after the end of the Subsequent Transition Period.

2.1.2 The provisioning of a Loop to AT&T's collocation space will require cross office cabling and cross connections within the central office to connect the Loop to a local switch or to other transmission equipment. These cross connects are separate components that are not considered a part of the Loop, and thus, have a separate charge.

2.1.3 Where facilities are available, BellSouth will install Loops in compliance with BellSouth's Products and Services Interval Guide, found in BellSouth's Local Ordering Handbook, available at the website at http://www.interconnection.bellsouth.com. For orders of fifteen (15) or more Loops, the installation and any applicable Order Coordination as described below will be handled on a project basis, and the intervals for more than 30 loops will be set by the BellSouth project manager for that order. When Loops require a Service Inquiry (SI) prior to issuing the order to determine if facilities are available, the interval for the SI process is separate from the installation interval. For the Project Management described in this section, there will be no additional charge to AT&T.

2.1.4 The Loop shall be provided to AT&T in accordance with applicable industry standard technical references. Absent any applicable industry standards, BellSouth's TR73600 Unbundled Local Loop Technical Specification shall apply in a nondiscriminatory manner consistent with 47 CFR 51.311b. If BellSouth uses a different set of technical specifications to provide service in its own network or to its retail end users, BellSouth will apply the same technical specifications to the Loops AT&T orders from BellSouth.

2.1.5 BellSouth will only provision, maintain and repair the Loops to the standards that are consistent with the type of Loop ordered, and at parity with the standards provided to BellSouth retail end users.

2.1.5.1 When a BellSouth technician is required to be dispatched to provision the Loop, BellSouth will tag the Loop with the Circuit ID number and the name of the ordering CLEC at no charge to the CLEC. When a dispatch is not required to provision the Loop, BellSouth will tag the Loop on the next required visit to the end user's location. If AT&T wants to ensure the Loop is tagged during the provisioning process for Loops that do not require a dispatch (e.g. UVL-SL1,

UVL-SL2, and UCL-ND), AT&T may order Loop Tagging. Rates for Loop Tagging are as set forth in Exhibit A of this Attachment.

2.1.5.2 In the event BellSouth must dispatch to the end user's location more than once due to incorrect or incomplete information provided by AT&T (e.g., incomplete address, incorrect contact name/number, etc.), BellSouth will bill AT&T for each additional dispatch required to provision the circuit due to the incorrect/incomplete information provided. BellSouth will assess the applicable Maintenance of Service rates as set forth in the rate Exhibit 1 below. In the event that the BellSouth technician misreads, misconnects, mislabels, and is required to redispatch to complete the order, BellSouth shall bear the cost of the redispatch.

Exhibit 1

Rates for Dispatch Due to Incomplete or Incorrect Information										
		AL	**FL**	**GA**	**KY**	**LA**	**MS**	**NC**	**SC**	**TN**
POTS	**Basic**	$19.67	$20.52	$30.44	$20.52	$19.44	$19.72	$19.44	$19.69	$19.44
	OT	$23.29	$24.14	$34.06	$24.14	$23.06	$23.34	$23.06	$23.44	$23.06
	Premium	$26.90	$27.75	$37.67	$27.75	$26.67	$26.95	$26.67	$26.92	$26.67
Special Service	**Basic**	$21.98	$22.83	$32.75	$22.83	$21.75	$22.03	$21.75	$22.00	$21.75
	OT	$26.39	$27.24	$37.16	$27.24	$26.16	$26.44	$26.16	$26.41	$26.16
	Premium	$30.79	$31.64	$41.56	$31.64	$30.56	$30.84	$30.56	$30.81	$30.56

2.1.6 **Loop Testing/Trouble Reporting**

2.1.6.1 For UNE Loops, AT&T will be responsible for testing and isolating troubles on the Loops. AT&T must test and isolate trouble to the BellSouth portion of a designed/non-designed unbundled Loop (e.g., UVL-SL2, UCL-D, UVL-SL1, UCL-ND, etc.) before reporting repair to the UNE Customer Wholesale Interconnection Network Services (CWINS) Center. Upon request from BellSouth at the time of the trouble report, AT&T will be required to provide the results of the AT&T test which indicate a problem on the BellSouth provided Loop.

2.1.6.2 Once AT&T has isolated a trouble to the BellSouth provided Loop, and had issued a trouble report to BellSouth on the Loop, BellSouth will take the actions necessary to repair the Loop if a trouble actually exists. BellSouth will repair these

Loops in the same time frames that BellSouth repairs similarly situated Loops to its end users.

2.1.6.3 If AT&T reports a trouble on a non-designed or designed Loop and no trouble actually exists, BellSouth will charge AT&T for any dispatching and testing (both inside and outside the CO) required by BellSouth in order to confirm the Loop's working status.

2.1.6.4 In the event BellSouth must dispatch to the end user's location more than once due to incorrect or incomplete information provided by AT&T (e.g., incomplete address, incorrect contact name/number, etc.), BellSouth will bill AT&T for each additional dispatch required to repair the circuit due to the incorrect/incomplete information provided. In the event that BellSouth technician misreads, misconnects, mislabels, etc., and is required to redispatch to complete the order, BellSouth shall bear the cost of the redispatch. BellSouth will assess the applicable Maintenance of Service rates as set forth in Exhibit 1 of section 2.1.5.2.

2.1.7 **Order Coordination and Order Coordination-Time Specific**

2.1.7.1 "Order Coordination" (OC) allows BellSouth and AT&T to coordinate the installation of the SL2 Loops, Unbundled Digital Loops (UDL) and other Loops where OC may be purchased as an option, to AT&T's facilities to limit end user service outage. OC is available when the Loop is provisioned over an existing circuit that is currently providing service to the end user. OC for physical conversions will be scheduled at BellSouth's discretion during normal working hours on the committed due date. OC shall be provided in accordance with the chart set forth below.

2.1.7.2 "Order Coordination – Time Specific" (OC-TS) allows AT&T to order a specific time for OC to take place. BellSouth will make every effort to accommodate AT&T's specific conversion time request. However, BellSouth reserves the right to negotiate with AT&T a conversion time based on load and appointment control when necessary. This OC-TS is a chargeable option for all Loops except Unbundled Copper Loops (UCL) and is billed in addition to the OC charge. AT&T may specify a time between 9:00 a.m. and 4:00 p.m. (location time) Monday through Friday (excluding holidays). If AT&T specifies a time outside this window, or selects a time or quantity of Loops that requires BellSouth technicians to work outside normal work hours, overtime charges will apply in addition to the OC and OC-TS charges. Overtime charges will be applied based on the amount of overtime worked and in accordance with the rates established in the Access Services Tariff, Section E13.2, for each state. The OC-TS charges for an order due on the same day at the same location will be applied on a per Local Service Request (LSR) basis.

2.1.8 **CLEC to CLEC Conversions for Unbundled Loops**

2.1.8.1 The CLEC to CLEC conversion process for unbundled Loops may be used by AT&T when converting an existing unbundled Loop from another CLEC for the same end user. The Loop type being converted must be included in AT&T's Interconnection Agreement before requesting a conversion.

2.1.8.2 To utilize the CLEC to CLEC conversion process, the Loop being converted must be the same Loop type with no requested changes to the Loop, must serve the same end user location from the same serving wire center, and must not require an outside dispatch to provision.

2.1.8.3 The Loops converted to AT&T pursuant to the CLEC to CLEC conversion process shall be provisioned in the same manner and with the same functionality and options as described in this Attachment for the specific Loop type, with the exception of LNP, over which BellSouth has no control in a CLEC to CLEC loop conversion. Such conversions shall be done in an interval no longer than conversions from a CLEC to BellSouth (i.e., winback).

2.1.8.4

	Order Coordination (OC)	**Order Coordination – Time Specific (OC-TS)**	**Test Points**	**DLR**	**Charge for Dispatch and Testing if No Trouble Found**
SL-1 **(Non-Designed)**	Chargeable Option	Chargeable Option	Not available	Chargeable Option – ordered as Engineering Information Document	Charged for Dispatch inside and outside Central Office
UCL-ND **(Non-Designed)**	Chargeable Option	Not Available	Not Available	Chargeable Option – ordered as Engineering Information Document	Charged for Dispatch inside and outside Central Office
Unbundled Voice Loops - SL-2 (including 2- and 4-wire UVL) (Designed)	Included	Chargeable Option	Included	Included	Charged for Dispatch outside Central Office

Unbundled Digital Loop (Designed)	Included	Chargeable Option (except on Universal Digital Channel)	Included (where appropriate)	Included	Charged for Dispatch outside Central Office
Unbundled Copper Loop (Designed)	Chargeable in accordance with Section 2	Not available	Included	Included	Charged for Dispatch outside Central Office
For UVL-SL1 and UCLs, AT&T must order and will be billed for both OC and OC-TS if requesting OC-TS.					

2.1.9 Bulk Migration

2.1.9.1 If AT&T requests to migrate twenty-five (25) or more UNE-Port/Loop Combination (UNE-P) customers to UNE-Loop (UNE-L) in the same Central Office on the same due date, AT&T must use the Bulk Migration process, which is described in the BellSouth CLEC Information Package, "UNE-Port/Loop Combination (UNE-P) to UNE-Loop (UNE-L) Bulk Migration." This CLEC Information package, incorporated herein by reference as it may be amended from time to time, is located at www.interconnection.bellsouth.com/guides/html/unes.html. The rates for the Bulk Migration process shall be the nonrecurring rates associated with the Loop type being requested on the Bulk Migration, as set forth in Exhibit A of this Attachment. Additionally, OSS charges will also apply per LSR generated per customer account as provided for in the Bulk Migration Request. The migration of Loops from Integrated Digital Loop Carrier (IDLC) will be done pursuant to Section 2.6 of this Attachment. The Parties agree that if an appropriate regulatory body orders a different process, or a "batch cut" process, AT&T may elect to use either process, as appropriate.

2.1.10 Provisioning and Coordinated Cutovers

2.1.10.1 Section 2.1.10 contains the initial coordination procedures that the Parties agree to follow when AT&T orders and BellSouth provisions the conversion of active BellSouth retail end users to a service configuration by which AT&T will serve such end users by unbundled Loops and number portability (hereinafter referred to as "Hot Cuts"). Both Parties agree that these procedures may need to be refined or augmented if necessary as experience in ordering and provisioning Hot Cuts is gained. Changes to the Hot Cut procedures should be implemented through the CLEC User Group and are subject to resolution through the dispute resolution process set forth in Section 16 of the General Terms and Conditions.

2.1.10.1.1 Except as otherwise agreed by the Parties, the time intervals for Hot Cuts shall be monitored and shall conform to the performance standards and consequences for failure to meet the specified standards as reflected in Attachment 9 of this Agreement, which is incorporated herein by this reference.

2.1.10.1.2 The following coordination procedures shall apply when BellSouth retail service is being converted to service to be provided by AT&T utilizing a coordinated SL1 or SL2 local Loop provided by BellSouth to AT&T with Local Number Portability (LNP), incorporated herein by this reference).

2.1.10.1.3 AT&T shall order Services and Elements as set forth in this Attachment 2 and BellSouth shall provide a Firm Order Confirmation ("FOC") (as that term and acronym are defined in Attachment 7, incorporated herein by this reference).

2.1.10.2 Ordering

2.1.10.2.1 AT&T shall request Hot Cuts from BellSouth by delivering to BellSouth a valid Local Service Request ("LSR") using BellSouth's ordering interfaces described in Attachment 6 to this Agreement, incorporated herein by this reference. AT&T may specify a Due Date or Frame Due Time, as defined below, at any time, including twenty-four (24) hours a day and seven (7) days a week. Using a coordinated SL1 or SL2 Loop**,** if project management is required, BST will support project management after hour provisioning dependent on system availability (which include planned maintenance or unplanned outages) and resource availability, which resources will be allocated on a nondiscriminatory basis. The BellSouth PM will make best efforts to secure the necessary resources and will be responsible for ensuring the BST personnel, and support systems or centers necessary are available at the time established for the after hour provisioning. AT&T shall specify whether its service order is to be provisioned by BellSouth as either: (a) OC; or (b) OC-TS. OC shall mean the type of service order used by AT&T to request that BellSouth provision a Hot Cut on the particular calendar date as specified on the LSR and confirmed on the FOC as set forth in Section 2.1.10.2.3 below, at any time during that day, referred to in this Section as the "Due Date." OC-TS shall mean the type of service order used by AT&T to request that BellSouth provision a Hot Cut on the particular day returned on the FOC as set forth in Section 2.1.10.2.3 below and at the particular time specified on the FOC, referred to in this Section as the "Frame Due Time." AT&T shall pay the appropriate rate for either OC or OC-TS as set forth in Attachment 2. AT&T will be billed and will pay overtime for conversions requested and occurring outside of BellSouth's normal hours of operation as defined in Section 2.1.10.2.2 below.

2.1.10.2.1.1 Until such time as BellSouth's systems can deliver the requested frame due time on the FOC as set forth above, AT&T shall rely on the time requested on the LSR.

2.1.10.2.2 For purposes of this Section, BellSouth's normal hours of operation for personnel performing physical wire work are defined as follows:

2.1.10.2.2.1 Monday – Friday:8:00 a.m. – 5:00 p.m. (Excluding Holidays) (Resale/UNE non-coordinated, coordinated orders and order coordination-time specific)

2.1.10.2.2.2 Saturday: 8:00 a.m. – 5:00 p.m. (Excluding Holidays) (Resale/UNE non-coordinated orders)

2.1.10.2.2.3 The above hours are defined as the time of day where the work is being performed.

2.1.10.2.2.4 Normal hours of operation for the various BellSouth centers supporting ordering, provisioning and maintenance are as set forth on BellSouth's web site as follows: **http://www.interconnection.bellsouth.com/centers/** and incorporated herein by this reference. Normal hours of operation for the BellSouth centers providing AT&T support will be equal to the hours of operation that BellSouth provisions services to its affiliates, end users, and other CLECs.

2.1.10.2.2.5 It is understood and agreed that BellSouth technicians involved in provisioning service to AT&T may work shifts outside of BellSouth's regular working hours as defined in Section 2.1.10.2.2 above (e.g., the employee's shift ends at 7:00 p.m. during daylight savings time). To the extent that AT&T requests that work necessarily required in the provisioning of service to be performed outside BellSouth's normal hours of operation and that work is performed by a BellSouth technician during his or her scheduled shift such that BellSouth does not incur any additional costs in performing the work on behalf of AT&T, BellSouth will not assess AT&T additional charges beyond the rates and charges specified in this Agreement.

2.1.10.2.2.6 AT&T will not be assessed overtime charges where BellSouth elects to perform a coordinated hot cut outside of BellSouth's normal hours of operation. However, AT&T will pay overtime charges subject to the provisions of Section 2.1.10.2.2.5 above, where AT&T requests a time specific conversion which based on the completion intervals outlined in Section 2.1.10.3.6 requires BellSouth to complete the conversion outside of BellSouth's normal hours of operation. BellSouth normal hours of operation are defined in Section 2.1.10.2.2 above of this Attachment 2 as well as **BellSouth's web site http://www.interconnection.bellsouth.com/centers/,** incorporated herein by this reference.

2.1.10.2.2.7 Upon receipt of the LSR, BellSouth's Operational Support System (hereinafter "BellSouth's OSS") shall examine the service request to determine whether it contains all the information necessary for BellSouth to process the service request. BellSouth shall review the information provided on the LSR and identify and reject any errors contained in the information provided by AT&T for the current view of the LSR.

2.1.10.2.2.8 BellSouth shall provide AT&T real-time, electronic access to its LFACS system in the pre-ordering phase to allow AT&T (1) to access loop makeup in accordance with Attachment 2 incorporated herein by this reference and (2) to validate its Connecting Facility Assignments ("CFA") prior to the issuance of an LSR. Implementation of such shall be determined by the current Change Control Process Guidelines outlined in Attachment 6.

2.1.10.2.2.9 Upon facility assignment validation by AT&T and upon receipt of AT&T's LSR, BellSouth may issue jeopardies to FOCs if BellSouth determines that a CFA assigned on an AT&T LSR is in conflict with BellSouth records.

2.1.10.2.2.10 Both parties agree that jeopardy clarifications should not occur, provided AT&T checks the status of the CFA utilizing the real-time pre-order LFACS access, as referenced in Section 2.1.10.2.2.8 above, prior to the issuance of an LSR, and BellSouth completes disconnect orders in a timely manner through updating its' own CFA database and performing the required physical work. BellSouth and AT&T will investigate and address adverse trends of jeopardy clarifications via the improvement mechanism outlined below.

2.1.10.2.2.10.1 AT&T or BellSouth ("Petitioner") shall notify the other Party ("Respondent") in writing via AT&T's Global Access Management ("GAM") Group or BellSouth's AT&T Account Team ("Account Team") of the needed areas of improvement.

2.1.10.2.2.10.2 The Respondent shall submit a written response to Petitioner within fifteen (15) calendar days of the requested change.

2.1.10.2.2.10.3 Upon receipt of the response, Petitioner shall either:

2.1.10.2.2.10.3.1 schedule a meeting between representatives of each party with authority to identify areas of improvement and, if applicable, to develop and implement process changes resulting from such mutual cooperation; or

2.1.10.2.2.10.3.2 accept all proposed changes by Respondent, if any, and notify Respondent with a written response within seven (7) calendar days that the changes, if any, will be accepted.

2.1.10.2.2.10.4 If Section 2.1.10.2.2.10.3.1 is implemented, the Parties agree to negotiate the requested change in good faith within ninety (90) calendar days of the day Petitioner requested the proposed change.

2.1.10.2.2.10.5 A mutually agreed upon process under either Section 2.1.10.2.2.10.3.1 or Section 2.1.10.2.2.10.3.2 shall be implemented upon a mutually agreed upon timeframe.

2.1.10.2.2.10.6 Should the Parties be unable to agree on a mutually acceptable change to the process and or an agreeable date to implement such change within one hundred and twenty (120) days of the day Petitioner requested the proposed change, the Parties agree to resolve any disputes in accordance with the dispute resolution process provided in Section 16 of the General Terms and Conditions of this Agreement.

2.1.10.2.2.10.7 At no such time, shall either Party waive any rights that it may have with respect to the Agreement in its entirety.

2.1.10.2.2.10.8 Nothing in this Improvement Plan is deemed to amend or modify any other terms in the Interconnection Agreement.

2.1.10.2.2.11 BellSouth and AT&T will work cooperatively to ensure data base integrity is achieved between AT&T and BellSouth CFA assignments. This cooperative effort will include at a minimum: (1) AT&T ensuring that its processes support data base integrity, e.g., timely issuance of disconnects, proper assigning of facilities pending on canceled LSRs, and use of information provided by BellSouth to allow AT&T to identify and synchronize such data base; and (2) BellSouth will ensure that it processes AT&T requests for cancellation of local service requests in a time frame that allows AT&T to accurately maintain its CFA records.

2.1.10.2.2.12 BellSouth will provide AT&T with data base information via the BellSouth Interconnection Services website at weekly intervals and BellSouth and AT&T will work jointly to identify and resolve any discrepancies between BellSouth and AT&T databases containing the CFA assignments.

2.1.10.2.3 Firm Order Commitment ("FOC")

2.1.10.2.3.1 Pursuant to Section 2.1.10.2.1 above, for purposes of this Section, a FOC is a notification from BellSouth to AT&T that a service order is valid and error free and that BellSouth has committed to provision the service order on the date specified on the LSR and confirmed on the FOC and/or on the date and time specified on the LSR and confirmed on the FOC for time specific conversions. BellSouth's committed due date is the date BellSouth strives to deliver service but is not a guaranteed date and may be altered due to facility or manpower shortages and acts of God.

2.1.10.2.3.2 For the initial LSR, BellSouth should not provide AT&T with either a request for clarification or a reject message after BellSouth provides AT&T a FOC, except as outlined in Section 2.1.10.2.2.9 above. Supplemental LSRs must be submitted via the method utilized to submit the original LSR e.g. mechanized or manual unless conditions warrant otherwise and mutually agreed to by both parties.

2.1.10.2.3.3 BellSouth's measurement of FOC/reject performance as stated in Section 2.1.10.2.3.1 above will be set forth in Attachment 9, incorporated herein by this reference.

2.1.10.3 Provisioning

2.1.10.3.1 Either party shall notify the other as soon as it becomes aware of any jeopardy condition which may arise that would jeopardize BellSouth's committed due date or OC-TS, as applicable, of providing service to AT&T.

2.1.10.3.1.1 Upon receipt of the FOC pursuant to Section 2.1.10.2.3.1, AT&T shall notify the customer of the Due Date and or Due Time (OC-TS order). Either party shall notify the other party immediately if either party becomes unable to make the Hot Cut at the Due Time and / or on the Due Date specified. New scheduled due dates and times shall be within BellSouth's normal hours of operations unless mutually agreed to by both parties.

2.1.10.3.1.2 Excluding facility shortages, acts of God or unforeseen force shortages, if BellSouth changes the date of a conversion from the date returned on the FOC, the new due date will be no greater than three (3) business days from the original requested date.

2.1.10.3.1.3 In the event BellSouth does not complete a conversion on the date returned on the FOC or does not complete a time specific conversion as requested due solely to BellSouth reasons, the following circumstances shall occur: (a) BellSouth shall document the order as a Missed Appointment pursuant to the appropriate service quality measurement outlined in Attachment 9 and incorporated herein by this reference and (b) AT&T will not re-negotiate nor consider a change in due date and/or due time as a re-negotiation and (c) AT&T will advise BellSouth to proceed as necessary to complete the cut; and BellSouth will not bill OCTS charges and AT&T will not be required to pay for OCTS where a missed appointment of OCTS has occurred as provided for in the service quality measurements of Attachment 9 and incorporated herein by this reference.

2.1.10.3.1.4 Conversions that cannot be completed as requested on the LSR and confirmed on the FOC, due solely to AT&T or AT&T's end user reasons will be submitted to BellSouth as a Supplemental Order. Supplemental Orders must be submitted via the method utilized to submit the original LSR, e.g., mechanized or manual unless conditions warrant otherwise and mutually agreed to by both parties.

2.1.10.3.2 Upon receipt of the FOC, AT&T and BellSouth agree to follow the procedures for porting numbers as outlined in Attachment 5, incorporated herein by this reference.

2.1.10.3.2.1 In the event that BellSouth discovers, during the provisioning process, a conflict between BellSouth's database and its physical facilities, indicating a lack of

BellSouth facilities, BellSouth shall issue a Pending Facilities ("PF") status by sending an electronic notice to AT&T, if the request was submitted electronically, or in the case of a manually submitted LSR, such notice will be provided via the PF report accessible via the Internet.

2.1.10.3.2.1.1 PF order status occurs when a due date may be in jeopardy due to facility delay and may become a Missed Appointment due to BellSouth reasons.

2.1.10.3.2.1.2 In the event that BellSouth cannot meet its committed Due Date and/or Due Time because of a PF condition due to a BellSouth facility shortage, the following shall occur: (a) BellSouth will notify AT&T as soon as the order is placed in PF status in accordance with Section 2.1.10.3.2.1 above; and (b) BellSouth shall document the order as a Missed Appointment ("MA") within BellSouth's internal systems, provided BellSouth is unable to complete the work on the date returned on the FOC; and (c) BellSouth will provide AT&T estimated service date ("ESD") information at intervals that BellSouth provides such information to itself, its own end users, its affiliates or any other CLEC. BellSouth targets to provide ESD information within five (5) business days from the date the PF condition occurs.

2.1.10.3.2.2 AT&T shall provide BellSouth with a toll free number as stated in the Implementation Contact Telephone Number ("ImpCon") Field on the LSR that BellSouth shall commit to call and use for all notification to AT&T. In addition, an AT&T representative will answer and will respond within five (5) minutes. Response as used in this section shall mean that the AT&T agent is ready to receive and record information provided by BellSouth.

2.1.10.3.3 AT&T will ensure that dial tone is delivered to the BellSouth collocation pair forty-eight (48) hours prior to due date.

2.1.10.3.3.1 BellSouth will advise AT&T, via jeopardy notice, as soon as BellSouth becomes aware of a jeopardy condition which would delay the delivery of service to AT&T as outlined in BellSouth's FOC or time of conversion as mutually agreed to or as ordered by AT&T.

2.1.10.3.3.2 Upon the issuance and receipt of a jeopardy notice, the Parties agree to follow mutually agreed upon business rules established for resolving various types of jeopardy conditions.

2.1.10.3.4 BellSouth and AT&T reserve the right to change its internal hot cut activities as business needs dictate. Any changes to the documented hot cut process are subject to the CLEC User Group guidelines. Issues which cannot be resolved satisfactorily through the CLEC User Group, will be subject to the dispute resolution process as set forth in Section 16 of the General Terms and Conditions of this agreement.

2.1.10.3.5 Loop Cut-Over Timing

2.1.10.3.5.1 BellSouth shall complete the Loop cut-over step and notify AT&T of such completion in accordance with this section, commencing with the specified time committed to on the FOC and ending no later than the following time limits depending on the number of lines being cut. In the case of a Coordinated Order Time Specific or OC conversion: 1-10 Loops => 60 mins (1 hour); 11-30 Loops => 120 mins. (2 hours) unless project managed; 31+ Loops => Project Managed.

2.1.10.3.5.2 BellSouth's commitment to performance as set forth in Attachment 9 of this Agreement is incorporated herein by this reference.

2.1.10.3.5.3 Intervals for Loops for a single end user on the same local service requests for Loops greater than thirty (30) will be completed at intervals mutually coordinated by both parties through Project Management. Both parties recognize that certain conversions requiring multiple cut points may exceed the above intervals but in any event both parties will work cooperatively to limit service outage to an end user.

2.1.10.3.5.4 In the event BellSouth does not complete the Loop cut-over step within the appropriate time limit provided in Section 2.1.10.3.5.1 above and notify AT&T of such completion in accordance with Section 2.1.10.3.5.1 above, AT&T may escalate such failure to the proper BellSouth official for expedited resolution immediately at the end of such time limit.

2.1.10.3.6 Completion Notice

2.1.10.3.6.1 BellSouth shall send AT&T completion notices when the LSRs are submitted electronically. If submitted manually, AT&T may determine the completion status for all LSRs by accessing the CSOTS Report via the Internet.

2.1.10.4 New Loop Provisioning – "Loop Only"

2.1.10.4.1 BellSouth will provision new Loops at intervals outlined in the Products and Services Interval Guide.

2.1.10.4.2 AT&T will deliver dial tone and telephone number to the AT&T collocation point forty-eight (48) hours prior to the due date.

2.1.10.4.3 BellSouth and AT&T will notify either party if the due date cannot be met for any reason.

2.1.10.4.4 Cooperative testing, trouble resolution, completion notification and acceptance testing as provided for in Ordering and Provisioning of Hot Cuts will apply, and is incorporated herein by this reference.

2.1.10.4.5 BellSouth will deliver to the ordered location at the end users premises, Loops as outlined in TR 73600, or in the applicable industry standard.

2.1.10.4.6 Where a field visit is required to provision the Loop, BellSouth will test the Loop ordered by AT&T to the NID. Testing requested by AT&T to points beyond the NID will be billed a time and material charge at the same increments BellSouth charges its own end users. Requests for field testing where a dispatch is not required may be made by AT&T and where mutually agreed to, BellSouth will dispatch to perform additional field testing at rates billed on a time and material basis as mentioned in this section.

2.2 <u>Unbundled Voice Loops (UVLs)</u>

2.2.1 BellSouth shall make available the following UVLs:

2.2.1.1 2-wire Analog Voice Grade Loop – SL1 (Non-Designed)

2.2.1.2 2-wire Analog Voice Grade Loop – SL2 (Designed)

2.2.1.3 4-wire Analog Voice Grade Loop (Designed)

2.2.2 Unbundled Voice Loops (UVL) may be provisioned using any type of Loop facility. This may include, but is not limited to, loaded copper, non-loaded copper, digital loop carrier systems, fiber/copper combination (hybrid loop) or a combination of any of these facilities. BellSouth, in the normal course of maintaining, repairing, and configuring its network, may also change the facilities that are used to provide any given voice grade circuit. This change may occur at any time. In these situations, BellSouth will only ensure that the newly provided facility will support voice grade services. BellSouth will not guarantee that AT&T will be able to continue to provide any advanced services over the new facility. BellSouth will offer UVL in two different service levels - Service Level One (SL1) and Service Level Two (SL2).

2.2.3 Unbundled Voice Loop - SL1 (UVL-SL1) Loops are 2-wire Loop start circuits, will be non-designed, and will not have remote access test points. OC will be offered as a chargeable option on SL1 Loops when reuse of existing facilities has been requested by AT&T. AT&T may also order OC-TS when a specified conversion time is requested. OC-TS is a chargeable option for any coordinated order and is billed in addition to the OC charge. An Engineering Information (EI) document can be ordered as a chargeable option. The EI document provides Loop Make-Up information which is similar to the information normally provided in a Design Layout Record (DLR). Upon issuance of a non-coordinated order in the service order system, SL1 Loops will be activated on the due date in the same manner and time frames that BellSouth normally activates POTS-type Loops for its end users.

2.2.4 For an additional charge BellSouth will make available Loop Testing so that AT&T may request further testing on new UVL-SL1 Loops. Rates for Loop Testing are as set forth in Exhibit A of this Attachment.

2.2.5 Unbundled Voice Loop – SL2 (UVL-SL2) Loops may be 2-wire or 4-wire circuits, shall have remote access test points, and will be designed with a DLR provided to AT&T. SL2 circuits can be provisioned with loop start, ground start or reverse battery signaling. OC is provided as a standard feature on SL2 Loops. The OC feature will allow AT&T to coordinate the installation of the Loop with the disconnect of an existing customer's service and/or number portability service. In these cases, BellSouth will perform the order conversion with standard order coordination at its discretion during normal work hours.

2.3 <u>Unbundled Digital Loops</u>

2.3.1 BellSouth will offer Unbundled Digital Loops (UDL). UDLs will be designed, will be provisioned with test points (where appropriate), and will come standard with OC and a DLR. The various UDLs are intended to support a digital transmission scheme or service.

2.3.2 BellSouth shall make available, at a minimum, the following UDLs, subject to the following terms:

2.3.2.1 2-wire Unbundled ISDN Digital Loop

2.3.2.2 2-wire Unbundled ADSL Compatible Loop

2.3.2.3 2-wire Unbundled HDSL Compatible Loop

2.3.2.4 4-wire Unbundled HDSL Compatible Loop

2.3.2.5 4-wire Unbundled DS1 Digital Loop

2.3.2.6 4-wire Unbundled Digital Loop/DS0 – 64 kbps, 56 kbps and below

2.3.2.7 DS3 Loop

2.3.2.8 STS-1 Loop

2.3.3 2-Wire Unbundled ISDN Digital Loops will be provisioned according to industry standards for 2-Wire Basic Rate ISDN services and will come standard with a test point, OC, and a DLR. AT&T will be responsible for providing BellSouth with a Service Profile Identifier (SPID) associated with a particular ISDN-capable Loop and end user. With the SPID, BellSouth will be able to adequately test the circuit and ensure that it properly supports ISDN service.

2.3.3.1 Upon the Effective Date of this Amendment, Universal Digital Channel (UDC) elements will no longer be offered by BellSouth and no new orders for UDC will be accepted. Any existing UDCs that were provisioned prior to the Effective Date of this Amendment will be grandfathered at the rates set forth in the Parties' interconnection agreement that was in effect immediately prior to the Effective Date of this Amendment. Existing UDCs that were provisioned prior to the Effective Date of this Amendment may remain connected, maintained and repaired according to BellSouth's TR73600 until such time as they are disconnected by AT&T or BellSouth provides ninety (90) calendar days notice that such UDC must be terminated. AT&T may order an ISDN Loop, if available, to provide the same functionality as the previously offered UDC product.

2.3.4 ADSL-capable Loop – an ADSL-capable Loop is a basic copper Loop (2-wire) without any intervening equipment and is capable of permitting the transmission of communications both within the voice band and in frequency ranges above the voice band. An ADSL-capable Loop provided by BellSouth is designed to Revised Resistance Design ("RRD") guidelines for non-loaded Loops and is expected to support ADSL service. The Loop is a 2-wire circuit and will come standard with a test point, OC, and a DLR.

2.3.5 HDSL-capable Loop – an HDSL-capable Loop is a basic Loop (2 or 4 –wire) without any intervening equipment and is capable of permitting the transmission of communications both within the voice band and in frequency ranges above the voice band. An HDSL-capable Loop provided by BellSouth is designed to Carrier Serving Area (CSA") guidelines for a non-loaded Loop. It may be a 2-wire or 4-wire circuit and will come standard with a test point, OC, and a DLR.

2.3.6 4-Wire Unbundled DS1 Digital Loop. This is a designed 4-wire Loop that is provisioned according to industry standards for DS1 or Primary Rate ISDN services and will come standard with a test point, OC, and a DLR. A DS1 Loop may be provisioned over a variety of Loop transmission technologies including copper, HDSL-based technology or fiber optic transport systems. It will include a 4-Wire DS1 Network Interface at the customer-facing end of the unbundled Loop.

2.3.6.1 BellSouth shall not provide more than ten (10) unbundled DS1 Loops to AT&T at any single building in which DS1 Loops are available as unbundled Loops.

2.3.7 4-Wire Unbundled Digital/DS0 Loop. These are designed 4-wire Loops that may be configured as 64kbps, 56kbps, 19kbps, and other sub-rate speeds and will come standard with a test point, OC, and a DLR.

2.3.8 DS3 Loop. DS3 Loop is a two-point digital transmission path which typically enables simultaneous two-way transmission of serial, bipolar, return-to-zero isochronous digital electrical signals at a transmission rate of 44.736 megabits per second (Mbps), where allowed by law, that is dedicated to the use of the ordering

CLEC in its provisioning qualifying services or qualifying, services together with nonqualifying telecommunications services and information services. It may provide transport for twenty-eight (28) DS1 channels, each of which provides the digital equivalent of twenty-four (24) analog voice grade channels. The interface to unbundled dedicated DS3 transport is a metallic-based electrical interface.

2.3.9 STS-1 Loop**.** STS-1 Loop is a high-capacity digital transmission path with SONET VT1.5 mapping that is dedicated for the use of the ordering customer for the purpose of provisioning local exchange and associated exchange access services. It is a two-point digital transmission path which provides for simultaneous two-way transmission of serial bipolar return-to-zero synchronous digital electrical signals at a transmission rate of 51.84 megabits per second (Mbps). It may provide transport for twenty-eight (28) DS1 channels, each of which provides the digital equivalent of twenty-four (24) analog voice grade channels. The interface to unbundled dedicated STS-1 transport is a metallic-based electrical interface.

2.3.10 Both DS3 Loop and STS-1 Loop require a Service Inquiry (SI) in order to ascertain availability. If and when, BellSouth develops an Operations Support System or includes DS3 and STS1 in its LFACs system for this type of Loop for BellSouth's retail end users, AT&T will be granted nondiscriminatory access to the same detailed information via that OSS at the rates set forth in Exhibit A to this attachment.

2.3.11 If DS3/STS-1 Loops are not readily available but can be made available through routine network modifications, as defined by the FCC, AT&T may request BellSouth to perform such routine network modifications. The request may not be used to place fiber cable. BellSouth will provide a price quote for the request, and upon receipt of authorization by AT&T and an error free LSR from AT&T, BellSouth shall perform the routine network modifications within BellSouth's standard Loop provisioning interval. Where BellSouth has recovered the costs for a routine network modification through its recurring and nonrecurring charges for the element provided, BellSouth will not seek to double recover such costs.

2.3.12 S3 services come with a test point and a DLR. Mileage is airline miles, rounded up and a minimum of one mile applies. BellSouth TR 73501 LightGate®Service Interface and Performance Specifications, Issue D, June 1995 applies to DS3 services.

2.3.13 AT&T may obtain a maximum of a single Unbundled DS3 Loop to any single building in which DS3 Loops are available as Unbundled Loops.

2.3.14 AT&T may access a total capacity of two (2) DS3s per end user location at the Network Element rates set forth in Exhibit A.

2.4 Unbundled Copper Loops (UCL)

2.4.1 BellSouth shall make available Unbundled Copper Loops (UCLs). The UCL is a copper twisted pair Loop that is unencumbered by any intervening equipment (e.g., filters, load coils, range extenders, digital loop carrier, or repeaters) and is not intended to support any particular telecommunications service. The UCL will be offered in two types – Designed and Non-Designed.

2.4.2 Unbundled Copper Loop – Designed (UCL-D)

2.4.2.1 The UCL-D will be provisioned as a dry copper twisted pair (2- or 4-wire) Loop that is unencumbered by any intervening equipment (e.g., filters, load coils, range extenders, digital loop carrier, or repeaters).

2.4.2.2 A UCL-D will be provisioned according to Resistance Design parameters for non-loaded Loop facilities and will have up to 1300 Ohms of resistance.

2.4.2.3 The UCL-D is a designed circuit, is provisioned with a test point, and comes standard with a DLR. OC is a chargeable option for a UCL-D; however, OC is always required on UCLs where a reuse of working circuits has been requested by AT&T.

2.4.2.4 These Loops are not intended to support any particular services and may be utilized by AT&T to provide a wide-range of telecommunications services as long as those services do not significantly degrade other services on the BellSouth network. This facility will include a Network Interface Device (NID) at the customer's location for the purpose of connecting the Loop to the customer's inside wire.

2.4.2.5 Upon the Effective Date of this Agreement, Unbundled Copper Loop – Long (UCL-L) elements will no longer be offered by BellSouth and no new orders for UCL-L will be accepted. Any existing UCL-Ls that were provisioned prior to the Effective Date of this Agreement will be grandfathered at the rates set forth in the Parties' interconnection agreement that was in effect immediately prior to the Effective Date of this Agreement. Existing UCL-Ls that were provisioned prior to the Effective Date of this Agreement may remain connected, maintained and repaired according to BellSouth's TR73600 and may remain connected until such time as they are disconnected by AT&T or BellSouth provides ninety (90) calendar days notice that such UCL-L must be terminated.

2.4.3 Unbundled Copper Loop – Non-Designed (UCL-ND)

2.4.3.1 The UCL–ND is provisioned as a dedicated 2-wire metallic transmission facility from BellSouth's Main Distribution Frame (MDF) to a customer's premises

(including the NID). The UCL-ND will be a "dry copper" facility in that it will not have any intervening equipment such as load coils, repeaters, or digital access main lines (DAMLs), and may have up to 6,000 feet of bridged tap between the end user's premises and the serving wire center. The UCL-ND typically will be 1300 Ohms resistance, although the UCL-ND will not have a specific length limitation. For Loops less than 18,000 feet and with less than 1300 Ohms resistance, the Loop will provide a transmission channel suitable for Loop start signaling and the transport of qualifying services or qualifying, services together with nonqualifying telecommunications services and information services. The UCL-ND will not be designed and will not be provisioned with either a DLR or a test point.

2.4.3.2 The UCL-ND facilities may be mechanically assigned using BellSouth's assignment systems. Therefore, the Loop Makeup (LMU) process is not required to order and provision the UCL-ND. However, upon AT&T's request, BellSouth will provide AT&T with non-discriminatory access to the same detailed information about the Loop (e.g., composition, electronics, length, gauge, electrical parameters) that is available to BellSouth in the same time interval it is provided to BellSouth's retail operations.

2.4.3.3 For an additional charge, BellSouth also will make available Loop Testing so that AT&T may request further testing on the UCL-ND. Rates for Loop Testing are as set forth in Exhibit A of this Attachment.

2.4.3.4 UCL-ND Loops are not intended to support any particular service and may be utilized by AT&T to provide a wide-range of telecommunications services as long as those services do not significantly degrade other services on the BellSouth network. The UCL-ND will include a NID at the customer's location for the purpose of connecting the Loop to the customer's inside wire.

2.4.3.5 OC will be provided as a chargeable option and may be utilized when the UCL-ND provisioning is associated with an existing BellSouth circuit that is currently providing service. OC-TS does not apply to this product.

2.4.3.6 AT&T may use BellSouth's Unbundled Loop Modification (ULM) offering to remove excessive bridged taps and/or load coils from any copper Loop within the BellSouth network. Therefore, some Loops that would not qualify as UCL-ND could be transformed into Loops that do qualify, using the ULM process.

2.5 Unbundled Loop Modifications (Line Conditioning)

2.5.1 Line Conditioning is defined as routine network modification that BellSouth regularly undertakes to provide xDSL services to its own customers. This may include the removal of any device, from a copper Loop or copper Sub-loop that may diminish the capability of the Loop or Sub-loop to deliver high-speed switched wireline telecommunications capability, including xDSL service. Such

devices include, but are not limited to, load coils, excessive bridged taps, low pass filters, and range extenders. Excessive bridged taps are bridged taps that serve no network design purpose and that are beyond the limits set according applicable industry standard technical references. Absent any applicable industry standard technical reference, (e.g. Telcordia, NESC, ANSI, NEBS) BST TR 73600 unbundled local Loop technical specifications shall apply in a non- discriminatory manner consistent with 47 CFR 51.311(b), the BellSouth TR 73600.

2.5.2 BellSouth will remove load coils only on copper loops and sub-loops that are less than 18,000 feet in length.

2.5.3 Any copper Loop being ordered by AT&T which has over 6,000 feet of combined bridged tap will be modified, upon request from AT&T, so that the Loop will have a maximum of 6,000 feet of bridged tap. This modification will be performed at no additional charge to AT&T. Loop conditioning orders that require the removal of bridged tap that serves no network design purpose on a copper Loop that will result in a combined total of bridged tap between 2,500 and 6,000 feet will be performed at the rates set forth in Exhibit A of this Attachment.

2.5.4 AT&T may request removal of any unnecessary and non-excessive bridged tap (bridged tap between 0 and 2,500 feet which serves no network design purpose), at rates pursuant to BellSouth's Special Construction Process as mutually agreed to by the Parties.

2.5.5 Rates for ULM are as set forth in Exhibit A of this Attachment.

2.5.6 BellSouth will not modify a Loop in such a way that it no longer meets the technical parameters of the original Loop type (e.g., voice grade, ADSL, etc.) being ordered.

2.5.7 If AT&T requests ULM on a reserved facility for a new Loop order, BellSouth may perform a pair change and provision a different Loop facility in lieu of the reserved facility with ULM if feasible. The Loop provisioned will meet or exceed specifications of the requested Loop facility as modified. AT&T will not be charged for ULM if a different Loop is provisioned. For Loops that require a DLR or its equivalent, BellSouth will provide LMU detail of the Loop provisioned.

2.5.8 AT&T may request Loop make up information pursuant to this Attachment prior to submitting a service inquiry and/or a LSR for the Loop type that AT&T desires BellSouth to condition. However, AT&T is responsible for obtaining and providing to BellSouth the information necessary to complete the SI and/or the LSR for line conditioning.

2.5.9 When requesting ULM for a Loop that BellSouth has previously provisioned for AT&T, AT&T will submit a service inquiry to BellSouth. If a spare Loop facility that meets the Loop modification specifications requested by AT&T is available at the location for which the ULM was requested, AT&T will have the option to change the Loop facility to the qualifying spare facility rather than to provide ULM. In the event that BellSouth changes the Loop facility in lieu of providing ULM, AT&T will not be charged for ULM but will only be charged the service order charges for submitting an order.

2.6 Loop Provisioning Involving Integrated Digital Loop Carriers

2.6.1 Where AT&T has requested an Unbundled Loop and BellSouth uses IDLC systems to provide the local service to the end user and BellSouth has a suitable alternate facility available, BellSouth will make such alternative facilities available to AT&T. If a suitable alternative facility is not available, then to the extent it is technically feasible, BellSouth will implement one of the following alternative arrangements for AT&T (e.g. hairpinning):

1. Roll the circuit(s) from the IDLC to any spare copper that exists to the customer premises.
2. Roll the circuit(s) from the IDLC to an existing DLC that is not integrated.
3. If capacity exists, provide "side-door" porting through the switch.
4. If capacity exists, provide "Digital Access Cross Connect System (DACS)-door" porting (if the IDLC routes through a DACS prior to integration into the switch).

2.6.2 Arrangements 3 and 4 above require the use of a designed circuit. Therefore, non-designed Loops such as the SL1 voice grade and UCL-ND may not be ordered in these cases.

2.6.3 If no alternate facility is available, and upon request from AT&T, and if agreed to by both Parties, BellSouth may utilize its Special Construction (SC) process to determine the additional costs required to provision facilities. AT&T will then have the option of paying the one-time SC rates to place the Loop.

2.7 Network Interface Device

2.7.1 The NID is defined as any means of interconnection of the end user's customer premises wiring to BellSouth's distribution plant, such as a cross connect device used for that purpose. The NID is a termination device required to terminate one or more lines or circuits at the premises. The NID features two independent chambers or divisions that separate the service provider's network from the end user's customer premises wiring. Each chamber or division contains the appropriate connection points or posts to which the service provider and the end user each make their connections. The NID provides a protective ground connection and is capable of terminating cables such as twisted pair cable.

2.7.2 BellSouth shall permit AT&T to connect AT&T's Loop facilities to the end user's customer premises wiring through the BellSouth NID or at any other technically feasible point.

2.7.3 **Access to NID**

2.7.3.1 AT&T may access the end user's customer premises wiring by any of the following means and AT&T shall not disturb the existing form of electrical protection and shall maintain the physical integrity of the NID:

2.7.3.1.1 BellSouth shall allow AT&T to connect its Loops directly to BellSouth's multi-line residential NID enclosures that have additional space and are not currently being used by BellSouth or any other telecommunications carriers to provide service to the premises.

2.7.3.1.2 Where an adequate length of the end user's customer premises wiring is present and environmental conditions permit, either Party may remove the customer premises wiring or cross-connect from the other Party's NID and connect such wiring or cross-connect to that Party's own NID;

2.7.3.1.3 Either Party may enter the subscriber access chamber or dual chamber NID enclosures for the purpose of extending a cross-connect or spliced jumper wire from the customer premises wiring through a suitable "punch-out" hole of such NID enclosures; or

2.7.3.1.4 AT&T may request BellSouth to make other rearrangements to the on-premises wiring terminations or terminal enclosure on a time and materials cost basis to be charged to the requesting Party (i.e., AT&T, its agent, the building owner or the subscriber). Such charges will be billed to the requesting Party.

2.7.3.2 In no case shall either Party remove or disconnect the other Party's Loop facilities from either Party's NIDs, enclosures, or protectors unless the applicable Commission has expressly permitted the same and the disconnecting Party provides prior notice to the other Party. In such cases, it shall be the responsibility of the Party disconnecting Loop facilities to leave undisturbed the existing form of electrical protection and to maintain the physical integrity of the NID. It will be AT&T's responsibility to ensure there is no safety hazard, and AT&T will hold BellSouth harmless for any liability associated with the removal of the BellSouth Loop from the BellSouth NID. Furthermore, it shall be the responsibility of the disconnecting Party, once the other Party's Loop has been disconnected from the NID, to reconnect the disconnected Loop to a nationally recognized testing laboratory listed station protector, which has been grounded as per Article 800 of the National Electrical Code. If no spare station protector exists in the NID, the disconnected Loop must be appropriately cleared, capped and stored. If the

disconnecting party does not wish to accept these responsibilities, other options exist in which BellSouth will install a NID as a chargeable option.

2.7.3.3 Neither Party shall remove or disconnect ground wires from the other party's NIDs, enclosures, or protectors.

2.7.3.4 Neither Party shall remove or disconnect NID modules, protectors, or terminals from the other Party's NID enclosures.

2.7.3.5 Due to the wide variety of NID enclosures and outside plant environments, BellSouth will work with AT&T to develop specific procedures to establish the most effective means of implementing this section if the procedures set forth herein do not apply to the NID in question.

2.7.4 Technical Requirements

2.7.4.1 The NID shall provide an accessible point of interconnection for the on-premises wiring for any inside wiring owned or controlled by BellSouth or for the Subloop Distribution facilities and shall maintain a connection to ground.

2.7.4.2 If an existing NID is accessed, it shall be capable of transferring electrical analog or digital signals between the end user's customer premises and the distribution media and/or cross connect to AT&T's NID.

2.7.4.3 Existing BellSouth NIDs will be provided in "as is" condition. AT&T may request BellSouth to do additional work to the NID on a time and material basis. When AT&T deploys its own local Loops in a multiple-line termination device, AT&T shall specify the quantity of NID connections that it requires within such device.

2.8 Sub-loop Elements

2.8.1 Where technically feasible BellSouth shall offer access to its Unbundled Sub-Loop (USL) elements as specified herein.

2.8.2 **Unbundled Sub-Loop Distribution**

2.8.2.1 The Unbundled Sub-Loop Distribution facility is a dedicated transmission facility that BellSouth provides from a Loop demarcation point on an end user's premises to a BellSouth cross-connect device regardless of the specific nomenclature employed when referring to the device. The BellSouth cross-connect device may be located within a remote terminal (RT) or a stand-alone cross-box in the field or in the equipment room of a building. AT&T will request access to USLD or Unbundled Copper Subloop ("UCSL") through the SI process. The unbundled sub-loop distribution media may be provided using copper twisted pair or coax, if coax is used in the BellSouth distribution system. BellSouth will make available

the following Sub-Loop Distribution offerings where facilities exist or can be made to exist through routine network modifications:

Unbundled Sub-Loop Distribution –Voice Grade
Unbundled Copper Sub-Loop
Unbundled Sub-Loop Distribution – Intrabuilding Network Cable (aka riser cable and campus cable

2.8.2.2 Unbundled Sub-Loop Distribution Voice Grade – (USLD-VG) is a sub-loop facility from the cross-box in the field up to and including the loop demarcation point on an end user's premises and may have load coils.

2.8.2.3 Unbundled Copper Sub-Loop (UCSL) is a non-loaded copper facility of any length provided from the cross-box in the field up to and including the Loop demarcation point on an end user's premises. If available, this facility will not have any intervening equipment such as load coils.

2.8.2.3.1 If AT&T requests a UCSL and a non-loaded pair is not available, AT&T may order unbundled subloop modification on an existing facility. If load coils are removed from any existing subloop, that subloop will be classified as a UCSL. AT&T may order, at its option the LMU, at the applicable rates, to determine what Loop modifications will be required, and should AT&T request a Loop that requires modification, AT&T will be charged the applicable rate for that Loop modification.

2.8.2.4 Unbundled Sub-Loop Distribution – Intrabuilding Network Cable (USLD-INC) is the distribution facility owned or controlled by BellSouth inside a building or between buildings on the same property that is not separated by a public street or road. USLD-INC includes the facility from the cross connect device which will be at or near the Minimum Point of Entry (MPOE) or in the building equipment room, as applicable, up to and including the Loop demarcation point on an end user's premises.

2.8.2.4.1 Upon request for USLD-INC from AT&T, BellSouth will install a cross connect panel which will be at or near the Minimum Point of Entry (MPOE) or in the building equipment room, as applicable, for the purpose of accessing USLD-INC pairs. The cross connect panel will function as a single point of interconnection (SPOI) for USLD-INC and will be accessible by multiple carriers as space permits. BellSouth will place cross-connect blocks for AT&T's use on this cross-connect panel. AT&T will be responsible for connecting its facilities to the cross-connect block(s).

2.8.2.5 For access to USLD and UCSL, AT&T shall install a cable to the BellSouth cross-box in the field to provide continuity to AT&T's feeder facilities pursuant to the terms and conditions for physical collocation for remote sites set forth in this Agreement. At AT&T's option, this cable would be connected in a

nondiscriminatory manner by an AT&T or BellSouth technician within the BellSouth cross-box during the set-up process. AT&T's cable pairs can then be connected to BellSouth's USLD within the BellSouth cross-box by the technician.

2.8.2.6 Through the SI process, BellSouth will determine whether access to Unbundled Sub-Loops at the location requested by AT&T is technically feasible and whether sufficient capacity exists in the cross-box. If existing capacity is sufficient to meet AT&T's request, BellSouth will perform the set-up as set forth in the CLEC Information Package.

2.8.2.7 The site set-up must be completed before AT&T can order sub-loop pairs. For the site set-up in a BellSouth cross-connect box in the field, BellSouth will perform the necessary work to splice AT&T's cable into the cross-connect box. For the site set-up inside a building equipment room, BellSouth will perform the necessary work to install the cross-connect panel and the connecting block(s) that will be used to provide access to the requested USLs. The Estimated Completion date ("ECD") for set up at the cross-box will be sixty (60) days subject to the terrain, and/or obtaining work permits, and equipment delivery. In the event that BellSouth cannot meet the sixty (60) day ECD, BellSouth will notify AT&T in writing via the SI process. BellSouth and AT&T will work cooperatively to establish a mutually agreeable installation date on an individual case basis.

2.8.2.8 Once the site set-up is complete, AT&T will request sub-loop pairs through submission of a LSR form to the Local Carrier Service Center ("LCSC"). The provisioning of the order will include the disconnect of BellSouth's feeder facilities from BellSouth's distribution facilities, to the extent such cross connects exist. OC is required with USL pair provisioning when AT&T requests an existing BellSouth circuit that is currently providing service, and the Order Coordination charge shall be billed in addition to the USL pair rate. For expedite requests by AT&T for sub-loop pairs, expedite charges will apply for intervals less than five (5) calendar days.

2.8.2.9 Absent any applicable industry standards technical references, BellSouth's TR73600 Unbundled Local Loop Technical Specification shall apply in a nondiscriminatory manner consistent with 47 CFR 51.311b.

2.8.3 <u>Unbundled Network Terminating Wire (UNTW)</u>

2.8.3.1 UNTW is twisted copper wiring or any future type of facility other than copper that BellSouth deploys and has not been proven to be unfeasible to unbundle, that extends from BellSouth's garden terminal on the side of a building or telecommunication equipment room or wiring closet that is typically located on each floor of a multi-story building to the point of demarcation at the end user's location. UNTW is the "last" part of the Loop on the BellSouth network side of the demarcation point.

2.8.3.2 This element will be provided in Multi-Dwelling Units (MDUs) and/or Multi-Tenants Units (MTUs) where either Party owns or controls wiring all the way to the end user's premises. Neither Party will provide this element in locations where the property owner provides its own wiring to the end user's premises, where a third party owns the wiring to the end user's premises.

2.8.3.2.1 BellSouth will install the IAT within sixty (60) days from the submission of the SI or as mutually agreed to by the parties. BellSouth shall install the IAT in properties identified by AT&T in a SI process.

2.8.3.2.2 In garden apartment or campus MDU environments, the IAT shall be installed adjacent to BellSouth's garden terminal unless AT&T and BellSouth mutually agree otherwise. Each IAT installed in garden apartments or campus MDU environments will provide access to all UNTW pairs connected to the BellSouth garden terminal with which it is associated.

2.8.3.2.3 In high-rise environments IATs will be installed in the wiring closet adjacent to BellSouth's distribution and riser cable terminals unless AT&T and BellSouth mutually agree otherwise. Each IAT installed in a wiring closet will provide access to UNTW pairs at rates set forth in Exhibit A.

2.8.3.2.4 Once the IATs are installed, AT&T's employees will have access to the IAT without the necessity of coordinating such efforts with BellSouth's employees or agents.

2.8.3.2.5 BellSouth's provision of IATs shall fulfill BellSouth's obligation to provide a SPOI.

2.8.3.2.6 Upon request by BellSouth, AT&T will engage in negotiations with BellSouth for the purpose of defining mutually agreeable terms, conditions and charges that grant BellSouth access to retail customers in MDUs where AT&T owns the network terminating wire available to serve the retail customer. The terms and conditions set forth in Subsections 2.8.3.3.11 – 2.8.3.3.14 of this Section shall be incorporated in any agreement negotiated between BellSouth and AT&T for BellSouth's access to AT&T's NTW. If the Parties are unable to reach agreement as to such terms, conditions and charges within sixty (60) days following BellSouth's request, then either Party, at its option, shall petition the Commission for resolution of the disputed terms.

2.8.3.3 <u>Requirements</u>

2.8.3.3.1 Except as noted below, upon request of AT&T, BellSouth will provide access to any IAT in all instances involving UNTW MDU premises, including garden style MDU complexes.

2.8.3.3.2 Upon receipt of the SI form requesting access to BellSouth's UNTW pairs at a MDU, representatives of both Parties will participate in a meeting at the site of the requested access. The purpose of the site visit will include discussion of the procedures for installation and location of the IAT. By request of AT&T, an IAT will be installed either adjacent to BellSouth's garden terminal, telecommunications equipment room, or inside each wiring closet. AT&T will deliver and connect its central office facilities to the UNTW pairs within the IAT. AT&T may access all pairs on an IAT. AT&T will only access pairs that are not being utilized to provide service or where the end user has requested a change in its local service provider to AT&T. Prior to connecting AT&T's service on a pair previously used by BellSouth, AT&T is responsible for ensuring the end user is no longer using BellSouth's service or another CLEC's service before accessing UNTW pairs.

2.8.3.3.3 BellSouth shall notify AT&T of the ECD for installation of the IATs and access to the UNTW pairs and will commence installation of the IATs. In the event BellSouth cannot meet the ECDs set forth in this attachment BellSouth will notify AT&T in writing via the SI process. BellSouth and AT&T will work cooperatively to establish a mutually agreeable installation date on an individual case basis to accommodate the layout of the property, number of terminals to be installed, condition of the property, or availability of IAT equipment.

2.8.3.3.3.1 If the ECD reaches jeopardy status and BellSouth is unable to complete the installation and provide access by the ECD, BellSouth will immediately notify AT&T of such status and negotiate a revised ECD.

2.8.3.3.4 BellSouth will not be required to install new or additional UNTW or other wire pairs in connection with the installation of an IAT unless otherwise agreed.

2.8.3.3.5 BellSouth will seek the property owner's permission for installation of the IAT(s). If the property owner refuses to allow the installation of the IAT, AT&T will be responsible for submitting a cancel via the SI process. BellSouth will not be found in non-compliance of the Commission's order if the property owner refuses the IAT installation.

2.8.3.3.6 BellSouth shall install the IATs, if IATs have not been previously installed, in accordance with generally accepted telephone industry standards. AT&T may install a separate connecting block in the IAT for its central office facilities; however, the connecting block must be of a size that will allow it to fit physically in the IAT (SPOI) and must meet the technical specifications for the IAT of the vendor(s) selected by BellSouth to provide the IAT. Such connecting block shall be used to connect the MDU pairs activated by AT&T with AT&T's network facilities.

2.8.3.3.7 BellSouth will record the completion of the IAT(s) and send AT&T a FOC. The FOC will contain the information necessary for AT&T to report UNTW pair activation to

BellSouth. Additionally, BellSouth will comply with the applicable Service Quality Measurements ("SQMs") found in Attachment 9 of this agreement.

2.8.3.3.8 AT&T may access, at the IAT, any UNTW pair connected to the IAT to provide service to an end user customer of AT&T. AT&T is responsible for obtaining the end user's authorization to disconnect service with BellSouth before using a UNTW pair that BellSouth was using to provide service to the end user. If the end user wishes to maintain concurrent service with both BellSouth and AT&T, AT&T shall not access the UNTW garden terminal MDU pair(s) that BellSouth is using to provide its concurrent service. AT&T will submit any Local Number Portability ("LNP") orders associated with changes in service providers for its end users pursuant to Attachment 5 of this Agreement.

2.8.3.3.9 Once AT&T has accessed a UNTW pair to serve its end user, AT&T will submit a Local Service Request ("LSR") to BellSouth within five (5) business days of UNTW pair activation to report activation of that UNTW pair using the information provided to AT&T on the FOC. AT&T may submit a single LSR to activate multiple UNTW pairs on the same IAT. If AT&T deactivates a UNTW pair, AT&T shall also submit an LSR within five (5) business days of UNTW pair deactivation to report such deactivation. LSRs shall be submitted to BellSouth manually until such time as an electronic interface is deployed.

2.8.3.3.10 AT&T must test and isolate any repair problem on existing UNTW pairs. AT&T will be responsible for reporting repair problems on existing UNTW pairs to the appropriate BellSouth department. Response to trouble and repair reports will be on a nondiscriminatory basis unless specific performance standards have been established for BellSouth. In that case, those performance standards will apply to BellSouth for the activities described in this Section. If BellSouth dispatches a technician on a UNTW trouble reported by AT&T and no trouble is found on the BellSouth facility, BellSouth will charge AT&T for time spent on the dispatch and UNTW testing.

2.8.3.3.11 AT&T will pay a non-recurring charge per pair for UNTW pair activation, a monthly recurring charge per pair for use of a UNTW MDU pair and a non-recurring charge per pair for each UNTW garden terminal MDU pair disconnected when AT&T is no longer providing service to the end user. These charges are set forth in Exhibit A.

2.8.3.3.12 If AT&T or a third party service provider (other CLEC) has not activated at least one (1) pair on each IAT installed, as requested on the SI within six (6) months of completion of IAT installation, BellSouth will issue an order for activation/billing of one (1) pair at an IAT, subject to the terrain, work permits, and equipment delivery.

2.8.3.3.13 If BellSouth determines that AT&T is using a UNTW pair without reporting activation to BellSouth, the following charges shall apply in addition to any fines which may be

established by the Commission and any other remedies at law or in equity available to BellSouth.

2.8.3.3.14 If AT&T activated a UNTW pair on which BellSouth was not previously providing service, AT&T will be billed for the use of that UNTW pair back to the date the end user began receiving service using that UNTW pair. Upon reasonable request, AT&T will provide copies of billing records to substantiate such date. BellSouth may bill back to the date of the IAT installation if AT&T fails to provide such records**.**

2.8.3.3.15 Other forms of MDU Premises Access to UNTW. In the event that AT&T requests a form of MDU premises access using UNTW pairs in a manner other than as set forth herein or that is substantially different from the process described in this Agreement, then AT&T will utilize the Bona Fide Request Process set forth in Attachment 10 of this Agreement to determine the appropriate terms and conditions for access to UNTW and to establish rates**.**

2.8.3.3.16 Any information about AT&T's multiunit premises access that BellSouth obtains pursuant to the activities described in this Section is specifically designated as Confidential Information pursuant to Section 9 of the General Terms and Conditions of this Agreement. In addition to the restrictions on disclosure of Confidential Information set forth in that Section, BellSouth hereby agrees that this information will not be shared with any of BellSouth's retail marketing or sales personnel**.**

2.8.3.3.17 The Parties acknowledge that BellSouth may describe procedures for the provision of unbundled network terminating wire in the CLEC Information Package provided by BellSouth Interconnection Services. To the extent that such procedures conflict with the procedures described in this Agreement, this Agreement will control; provided, however, that, at the request of BellSouth, AT&T will negotiate in good faith to amend this Agreement to incorporate any BellSouth procedures that differ from the procedures in this Agreement. To the extent the Parties cannot agree on such an amendment, either Party may pursue the dispute resolution process set forth in the General Terms and Conditions of this Agreement. BellSouth shall provide notice to AT&T of changes in the CLEC Information Package via the carrier notification process prior to implementing such changes.

2.8.3.4 Subloop Intra-building Network Cable

2.8.3.4.1 BellSouth will install the IAT within sixty (60) days after the submission of the SI or as mutually agreed to by the Parties. BellSouth shall install the IAT in properties identified by AT&T in a SI process.

2.8.3.4.2 Through the Service Inquiry ("SI") process, BellSouth will determine whether access to USL-INC at the location requested by AT&T is technically feasible and whether sufficient capacity exists in the cross-box.

If existing capacity is sufficient to meet AT&T's request, then BellSouth will perform the set-up as described in the section that follows. Where access to the cross box is infeasible, BellSouth will notify AT&T in writing within five (5) to seven (7) business days through the SI process. Where modifications are necessary to permit access to the cross box, the Parties will work cooperatively to assess the applicability of special construction charges. If the Parties cannot agree regarding such charges, the Parties will escalate to the appropriate level of management or seek resolution pursuant to the dispute resolution process section of the General Terms and Conditions of this Agreement.

2.8.3.4.3 If the ECD reaches jeopardy status and BellSouth is unable to complete the installation and provide access by the ECD, BellSouth will immediately notify AT&T of such status and negotiate a revised ECD.

2.8.3.4.4 BellSouth shall notify AT&T of the ECD for installation of the IATs and access to the USL-INC pairs and will commence installation of the IATs. In the event BellSouth cannot meet the ECDs set forth in this Attachment BellSouth will notify AT&T in writing via the SI process, BellSouth and AT&T will work cooperatively to establish a mutually agreeable installation date on an individual case basis to accommodate the layout of the property, number of terminals to be installed, condition of the property, or availability of IAT equipment.

2.8.3.4.5 BellSouth will install a cross connect panel in the building equipment room for the purpose of accessing USL-INC pairs from a building equipment room. The cross-connect panel will function as a SPOI for USL-INC and will be accessible by multiple carriers as space permits. BellSouth will place cross-connect blocks in 25-pair increments for AT&T's use on this ct panel. AT&T will be responsible for connecting its facilities to the 25-pair cross-connect block(s).

2.8.3.4.6 The site set-up must be completed before AT&T can order subloop pairs. For the site set-up in a BellSouth cross-connect box in the field, BellSouth will perform the necessary work to splice AT&T's cable into the crossconnect box. For the site set-up inside a building equipment room, BellSouth will perform the necessary work to install the cross-connect panel and the connecting block(s) that will be used to provide access to the requested USLs.

2.8.3.4.7 Once the site set-up is complete, AT&T will request subloop pairs through submission of a LSR form to the LCSC. For expedite requests by AT&T for subloop pairs, expedite charges will apply for intervals less than 5 days.

2.8.3.4.8 Unbundled Subloops will be provided in accordance with the applicable industry standards.

2.8.4 Unbundled Sub-Loop Feeder

2.8.4.1 To the extent that AT&T has Unbundled Sub-Loop Feeder elements as of the Effective Date of this Agreement, Unbundled Sub-Loop Feeder (USLF) elements will no longer be offered by BellSouth at TELRIC prices. Within ninety (90) calendar days of the Effective Date of this Amendment, AT&T will either negotiate market-based rates for these elements or will issue orders to have these elements disconnected. If, after this ninety (90)-day period, market-based rates have not been negotiated and AT&T has not issued the appropriate disconnect orders, BellSouth may immediately disconnect any remaining USLF elements and will bill AT&T any applicable disconnect charges.

2.8.5 Unbundled Loop Concentration

2.8.5.1 Upon the Effective Date of this Amendment, the Unbundled Loop Concentration (ULC) element will no longer be offered by BellSouth and no new orders for ULC will be accepted. Any existing ULCs that were provisioned prior to the Effective Date of this Amendment will be grandfathered at the rates set forth in the Parties' interconnection agreement that was in effect immediately prior to this Amendment and may remain connected, maintained and repaired according to BellSouth's TR73600 until such time as they are disconnected by AT&T, or BellSouth provides ninety (90) calendar days notice that such ULC must be terminated.

2.8.6 Dark Fiber Loop

2.8.6.1 Dark Fiber Loop is an unused optical transmission facility, without attached signal regeneration, multiplexing, aggregation or other electronics, from the demarcation point at an end user's premises to the end user's serving wire center. Dark Fiber Loops may be strands of optical fiber existing in aerial or underground structure. BellSouth will not provide line terminating elements, regeneration or other electronics necessary for AT&T to utilize Dark Fiber Loops.

2.8.6.2 Transition for Dark Fiber Loop

2.8.6.2.1 For purposes of this Section 2.8.6, the Transition Period for Dark Fiber Loops is the eighteen (18) month period beginning March 11, 2005 and ending September 10, 2006.

2.8.6.2.2 For purposes of this Section 2.8.6, Embedded Base means Dark Fiber Loops that were in service for AT&T as of March 10, 2005. Subsequent disconnects or loss of end users shall be removed from the Embedded Base.

2.8.6.3 During the Transition Period only, BellSouth shall make available for the Embedded Base Dark Fiber Loops for AT&T at the terms and conditions set forth in this Attachment.

2.8.6.4 Notwithstanding the Effective Date of this Agreement, the rates for AT&T's Embedded Base of Dark Fiber Loops during the Transition Period shall be as set forth in Exhibit A.

2.8.6.5 The Transition Period shall apply only to AT&T's Embedded Base and AT&T shall not add new Dark Fiber Loops pursuant to this Agreement.

2.8.6.6 Effective September 11, 2006, Dark Fiber Loops will no longer be made available pursuant to this Agreement.

2.8.6.7 No later than June 10, 2006 AT&T shall submit spreadsheet(s) identifying all of the Embedded Base of circuits to be either disconnected or converted to other BellSouth services as Conversions pursuant to Section 1.6. The Parties shall negotiate a project schedule for the Conversion of the Embedded Base.

2.8.6.7.1 If AT&T fails to submit the spreadsheet(s) specified in Section 2.8.6.7 above for all of its Embedded Base prior to June 10, 2006, BellSouth will identify AT&T's remaining Embedded Base, if any, and will transition such circuits to the equivalent tariffed BellSouth service(s). Those circuits identified and transitioned by BellSouth pursuant to this Section 2.8.6.7.1 shall be subject to all applicable disconnect charges as set forth in this Agreement and the full nonrecurring charges for installation of the equivalent tariffed BellSouth service as set forth in BellSouth's tariffs.

2.8.6.7.2 For Embedded Base circuits converted pursuant to Section 2.8.6.7 or transitioned pursuant to 2.8.6.7.1, the applicable recurring tariff charge shall apply to each circuit as of the earlier of the date each circuit is converted or transitioned, as applicable, or September 11, 2006.

2.9 Loop Makeup

2.9.1 Description of Service

2.9.1.1 BellSouth shall make available to AT&T LMU information so that AT&T can make an independent judgment about whether the Loop is capable of supporting the advanced services equipment AT&T intends to install and the services AT&T wishes to provide. This section addresses LMU as a preordering transaction, distinct from AT&T ordering any other service(s). Loop Makeup Service Inquiries (LMUSI) and mechanized LMU queries for preordering LMU are

likewise unique from other preordering functions with associated SIs as described in this Agreement.

2.9.1.2 BellSouth will provide AT&T LMU information consisting of the composition of the Loop material (copper/fiber); the existence, location and type of equipment on the Loop, including but not limited to digital loop carrier or other remote concentration devices, feeder/distribution interfaces, bridged taps, load coils, pair-gain devices; the Loop length; the wire gauge and electrical parameters.

2.9.1.3 BellSouth's LMU information is provided to AT&T as it exists either in BellSouth's databases or in its hard copy facility records. BellSouth does not guarantee accuracy or reliability of the LMU information provided.

2.9.1.4 BellSouth will provide LMU information to the requesting CLEC, if either BST or the requesting CLEC controls the Loop(s) that serve the service location for which LMU information has been requested. When a CLEC other than the CLEC that controls the Loop requests LMU information, BST will not provide the LMU unless BellSouth receives a Letter of Authorization (LOA) from the voice CLEC (owner) or its authorized agent with the LMUSI.

2.9.1.5 AT&T may choose to use equipment that it deems will enable it to provide a certain type and level of service over a particular BellSouth Loop as long as that equipment does not disrupt other services on the BellSouth network. The determination shall be made solely by AT&T and BellSouth shall not be liable in any way for the performance of the advanced data services provisioned over said Loop. The specific Loop type (ADSL, HDSL, or otherwise) ordered on the LSR must match the LMU of the Loop reserved taking into consideration any requisite line conditioning. The LMU data is provided for informational purposes only and does not guarantee AT&T's ability to provide advanced data services over the ordered Loop type. Further, if AT&T orders Loops that do not require a specific facility medium (i.e. copper only) or Loops that are not intended to support advanced services (such as UV-SL1, UV-SL2, or ISDN compatible Loops) and that are not inventoried as advanced services Loops, the LMU information for such Loops is subject to change at any time due to modifications and/or upgrades to BellSouth's network. AT&T is fully responsible for any of its service configurations that may differ from BellSouth's technical standard for the Loop type ordered.

2.9.2 <u>Submitting Loop Makeup Service Inquiries</u>

2.9.2.1 AT&T may obtain LMU information by submitting a mechanized LMU query or a Manual LMUSI. Mechanized LMUs should be submitted through BellSouth's OSS interfaces. After obtaining the Loop information from the mechanized LMU process, if AT&T needs further Loop information in order to determine Loop

service capability, AT&T may initiate a separate Manual Service Inquiry for a separate nonrecurring charge as set forth in Exhibit A of this Attachment.

2.9.2.2 Manual LMUSIs shall be submitted according to the guidelines in the LMU CLEC Information Package, incorporated herein by reference, as it may be amended from time to time, which can be found at the following BellSouth website: http://interconnection.bellsouth.com/guides/html/unes.html. The service interval for the return of a Manual LMUSI is three (3) business days. Manual LMUSIs are not subject to expedite requests. This service interval is distinct from the interval applied to the subsequent service order.

2.9.3 Loop Reservations

2.9.3.1 For a Mechanized LMUSI, AT&T may reserve up to ten (10) Loop facilities. For a Manual LMUSI, AT&T may reserve up to three (3) Loop facilities.

2.9.3.2 AT&T may reserve facilities for up to four (4) business days for each facility requested through LMU from the time the LMU information is returned to AT&T. During and prior to AT&T placing an LSR, the reserved facilities are rendered unavailable to other customers, including BellSouth. If AT&T does not submit an LSR for a UNE service on a reserved facility within the four (4)-day reservation timeframe, the reservation of that spare facility will become invalid and the facility will be released.

2.9.3.3 Charges for preordering Manual LMUSI or Mechanized LMU are separate from any charges associated with ordering other services from BellSouth.

2.9.3.4 All LSRs issued for reserved facilities shall reference the facility reservation number as provided by BellSouth. AT&T will not be billed any additional LMU charges for the Loop ordered on such LSR. If, however, AT&T does not reserve facilities upon an initial LMUSI, AT&T's placement of an order for an advanced data service type facility will incur the appropriate billing charges to include SI and reservation per Exhibit A of this Attachment.

2.9.3.5 Where AT&T has reserved multiple Loop facilities on a single reservation, AT&T may not specify which facility shall be provisioned when submitting the LSR. For those occasions, BellSouth will assign to AT&T, subject to availability, a facility that meets the BellSouth technical standards of the BellSouth type Loop as ordered by AT&T.

3 Line Sharing

3.1 General

3.1.1 Line Sharing is defined as the process by which AT&T provides digital subscriber line service over the same copper Loop that BellSouth uses to provide voice service, with BellSouth using the low frequency portion of the Loop and AT&T using the high frequency spectrum (as defined below) of the Loop.

3.1.2 Line Sharing arrangements in service as of October 1, 2003, will be grandfathered until the earlier of the date the end user discontinues or moves service with AT&T. Grandfathered arrangements pursuant to this Section will be billed at the rates set forth in Exhibit A.

3.1.3 For the period from October 2, 2003, through October 1, 2004, AT&T may request new Line Sharing arrangements. For Line Sharing arrangements placed in service between October 2, 2003, and October 1, 2004, the rates will be as set forth in Exhibit A. After October 1, 2004, AT&T may not request new Line Sharing arrangements under the terms of this Agreement.

3.1.4 The rates set forth herein will be applied retroactively back to the date set forth in the Triennial Review Order.

3.1.5 As of the earlier of October 2, 2006, or the date that the end user discontinues or moves service with AT&T, all Line Sharing arrangements pursuant to Section 3.1.3 of this Attachment shall be terminated.

3.1.6 The High Frequency Spectrum is defined as the frequency range above the voiceband on a copper Loop facility carrying analog circuit-switched voiceband transmissions. Although the high frequency portion of the Loop network element is limited by technology, i.e., is only available on a copper Loop facility, access to this network element is not limited to the copper Loop facility itself. Access to the High Frequency Spectrum is intended to allow AT&T the ability to provide Digital Subscriber Line (xDSL) data services to the end user for which BellSouth provides voice services. The High Frequency Spectrum shall be available for any version of xDSL complying with Spectrum Management Class 5 of ANSI T1.417, American National Standard for Telecommunications, Spectrum Management for Loop Transmission Systems. BellSouth will continue to have access to the low frequency portion of the Loop spectrum (from 300 Hertz to at least 3000 Hertz, and potentially up to 3400 Hertz, depending on equipment and facilities) for the purposes of providing voice service. AT&T shall only use xDSL technology that is within the PSD mask for Spectrum Management Class 5 as found in the above-mentioned document.

3.1.7 Currently, for an existing Loop, access to the High Frequency Spectrum requires an xDSL compatible copper Loop. A conditioned Loop is a Loop with no load coils, low-pass filters, range extenders, Digital Added Main Lines ("DAML"), or similar devices and minimal bridge taps consistent with the applicable industry standard technical references. BellSouth will provide Loop conditioning to

AT&T in accordance with the High Frequency Spectrum (CO Based) Unbundled Loop Modification CLEC Information Package. Nonrecurring rates for this UNE offering may be found in Exhibit A of this Attachment.

3.1.8 BellSouth must condition Loops to enable AT&T to provide xDSL-based services on the same Loops BellSouth is providing analog voice service, regardless of Loop length. BellSouth is required to condition Loops even if BellSouth itself is not offering xDSL services to the customer on that Loop. BellSouth is not required to condition a Loop for access to the High Frequency Spectrum if conditioning significantly degrades BellSouth's voice service. Should BellSouth refuse to condition a Loop because it will significantly degrade voiceband services, BellSouth must make an affirmative showing to the state commission that conditioning the specific Loop in question will significantly degrade the voiceband service. The state commission will determine on a case-by-case basis whether or not a specific Loop will significantly degrade the voice service on that Loop.

3.1.9 Line Sharing shall only be available on Loops on which BellSouth is also providing, and continues to provide, analog voice service directly to the end user. In the event the end user terminates its BellSouth provided voice service for any reason, or in the event BellSouth disconnects the end user's voice service pursuant to its tariffs or applicable law, and AT&T desires to continue providing xDSL service on such Loop, AT&T shall be required to purchase a full stand-alone Loop UNE. To the extent commercially practicable, BellSouth shall give AT&T notice in a reasonable time prior to disconnect, which notice shall give AT&T an adequate opportunity to notify BellSouth of its intent to purchase such Loop. In those cases in which BellSouth no longer provides voice service to the end user and AT&T purchases the full stand-alone Loop, AT&T may elect the type of Loop it will purchase. AT&T will pay the appropriate recurring and nonrecurring rates for such Loop as set forth in Exhibit A to this Attachment. In the event AT&T purchases a voice grade Loop, AT&T acknowledges that such Loop may not remain xDSL compatible.

3.1.10 If AT&T reports a trouble on the High Frequency Spectrum of a Loop and no trouble actually exists on the BellSouth portion, BellSouth will charge AT&T for any dispatching and testing (both inside and outside the CO) required by BellSouth in order to confirm the working status. The rates charged for no trouble found (NTF) shall be as set forth in Exhibit A of this Attachment.

3.1.11 Only one CLEC shall be permitted access to the High Frequency Spectrum of any particular Loop.

3.2 **Provisioning of Line Sharing and Splitter Space**

3.2.1 BellSouth will provide AT&T with access to the High Frequency Spectrum as follows:

3.2.1.1 To order High Frequency Spectrum on a particular Loop, AT&T must have a Digital Subscriber Line Access Multiplexer (DSLAM) collocated in the central office or other network location that can serve the end user of such Loop.

3.2.1.2 AT&T may provide its own splitters or may order splitters in a central office once it has installed its DSLAM in that central office. BellSouth will install splitters within thirty-six (36) calendar days of AT&T's submission of an error free Line Splitter Ordering Document (LSOD) to the BellSouth Complex Resale Support Group.

3.2.1.3 Once a splitter is installed on behalf of AT&T in a central office in which AT&T is located, AT&T shall be entitled to order the High Frequency Spectrum on lines served out of that central office. BellSouth will bill and AT&T shall pay the electronic or manual ordering charges as applicable when AT&T orders High Frequency Spectrum for end user service.

3.2.1.4 BellSouth shall test the data portion of the Loop to ensure the continuity of the wiring for AT&T's data.

3.3 <u>BellSouth Provided Splitter – Line Sharing</u>

3.3.1 BellSouth will select, purchase, install, and maintain a central office POTS splitter and provide AT&T access to data ports on the splitter. The splitter will route the High Frequency Spectrum on the circuit to AT&T's xDSL equipment in AT&T's collocation space. At least thirty (30) calendar days before making a change in splitter suppliers, BellSouth will provide AT&T with a carrier notification letter, informing AT&T of change. AT&T shall purchase ports on the splitter in increments of eight (8), twenty-four (24), or ninety-six (96) ports in Alabama, Florida, Georgia, Kentucky, Louisiana, Mississippi, North Carolina and South Carolina. AT&T shall purchase ports on the splitter in increments of twenty-four (24) or ninety-six (96) ports in Tennessee.

3.3.2 BellSouth will install the splitter in (i) a common area close to AT&T's collocation area, if possible; or (ii) in a BellSouth relay rack as close to AT&T's DS0 termination point as possible. Placement of the splitter shall not increase AT&T's cost of cabling or other activities related to the installation of a splitter. AT&T shall have access to the splitter for test purposes, regardless of where the splitter is placed in the BellSouth premises. For purposes of this section, a common area is defined as an area in the central office in which both Parties have access to a common test access point. A Termination Point is defined as the point of termination for AT&T on the main distributing frame in the central office and is not the demarcation point set forth in Attachment 4 of this Agreement. BellSouth will cross-connect the splitter data ports to a specified AT&T DS0 at such time that BellSouth completes the order as submitted by AT&T.

3.4 CLEC Provided Splitter – Line Sharing

3.4.1 AT&T may at its option purchase, install and maintain central office POTS splitters in its collocation arrangements. AT&T may use such splitters for access to its customers and to provide digital line subscriber services to its customers using the High Frequency Spectrum. Existing Collocation rules and procedures and the terms and conditions relating to Collocation set forth in Attachment 4-Central Office shall apply.

3.4.2 Any splitter installed by AT&T shall comply with the ANSI T1.413, Annex E, any future ANSI splitter Standard, or any splitters deploys or permitted by BellSouth or its affiliate. AT&T may install any splitters that BellSouth deploys or permits to be deployed for itself or any BellSouth affiliate.

3.4.3 Any splitter installed by BST shall comply with the ANSI T1.413, Annex E, or any future ANSI splitter Standard.

3.5 Ordering – Line Sharing

3.5.1 AT&T shall use BellSouth's LSOD to order splitters from BellSouth and to activate and deactivate DS0 Collocation Connecting Facility Assignments (CFA) for use with High Frequency Spectrum.

3.5.2 BellSouth will provide AT&T the LSR format to be used when ordering the High Frequency Spectrum.

3.5.3 BellSouth will provision High Frequency Spectrum in compliance with BellSouth's Products and Services Interval Guide available at the website at http://www.interconnection.bellsouth.com.

3.5.4 BellSouth will provide AT&T access to Preordering LMU in accordance with the terms of this Agreement. BellSouth shall bill and AT&T shall pay the rates for such services, as described in Exhibit A.

3.6 Maintenance and Repair – Line Sharing

3.6.1 AT&T shall have access for repair and maintenance purposes to any Loop for which it has access to the High Frequency Spectrum. If AT&T is using a BellSouth owned splitter, AT&T may access the Loop at the point where the combined voice and data signal exits the central office splitter via a bantam test jack. If AT&T provides its own splitter, it may test from the collocation space or the Termination Point.

3.6.2 BellSouth will be responsible for repairing voice services and the physical line between the NID at the customer's premises and the Termination Point. AT&T will be responsible for repairing data services. Each Party will be responsible for maintaining its own equipment.

3.6.3 AT&T shall inform its end users to direct data problems to AT&T, unless both voice and data services are impaired, in which event the end users should call BellSouth.

3.6.4 Once a Party has isolated a trouble to the other Party's portion of the Loop, the Party isolating the trouble shall notify the end user that the trouble is on the other Party's portion of the Loop.

3.6.5 In the event that AT&T's deployment of xDSL on the High Frequency Spectrum degrades the voice service such that the end user cannot place a call or the degradation is E911 service affecting, BellSouth will restore the service to its original state and AT&T shall pay for such restoration at the Loop conditioning rate. . Notwithstanding anything else to the contrary in this Agreement, when BellSouth receives a trouble and isolates the trouble to the physical collocation arrangement belonging to AT&T, BellSouth will notify AT&T and bill AT&T the NTF charges as described in 3.1.10 above. BellSouth will call AT&T and inform AT&T of the trouble in its equipment. AT&T may initiate the BellSouth Customer Wholesale Interconnection Network Services (CWINS) Maintenance Change Process for CLEC Connecting Facility Assignments (CFA) to restore the data service.

3.7 <u>Line Splitting</u>

3.7.1 Line Splitting – a competing carrier (AT&T or data LEC, but not an incumbent LEC) seeks to provide combined voice and data services on the same unbundled Loop, or two competing carriers join to provide voice and data services.

3.7.2 In the event AT&T provides its own switching, obtains switching from a third party or AT&T obtains switching from a separately negotiated agreement with BellSouth, AT&T may engage in line splitting arrangements with another CLEC using a splitter, provided by AT&T, in a Collocation Arrangement at the central office where the Loop terminates into a distribution frame or its equivalent.

3.7.3 BellSouth will make all necessary network modifications including providing non-discriminatory access to operational support systems necessary for preordering, ordering, provisioning, maintenance and repair, and billing for Loops used in a Line Splitting arrangement. This support will be consistent with the support provided to BellSouth and any of its affiliates providing advanced services on Loops.

3.8 Maintenance – Line Splitting

3.8.1 BellSouth will be responsible for repairing voice services and the physical Loop between the NID at the customer's premises and the termination point. AT&T will be responsible for maintaining the voice and data services. Each Party will be responsible for maintaining its own equipment.

3.8.2 AT&T shall inform its end users to direct all problems to AT&T or its authorized agent.

3.8.3 AT&T shall indemnify, defend and hold harmless BellSouth from and against any claims, losses, actions, causes of action, suits, demands, damages, injury, and costs including reasonable attorney fees, which arise out of actions related to the other service provider, except to the extent caused by BellSouth's gross negligence or willful misconduct.

4 Unbundled Network Element Combinations

4.1 Except as otherwise set forth in this Agreement, upon request, BST shall perform the functions necessary to combine network Elements that BST is required to provide under this Agreement in any manner, even if those elements are not ordinarily combined in BST's network, provided that such Combination is technically feasible and will not undermine the ability of other carriers to obtain access to Network Elements or to interconnect with BST's network. If required, BellSouth will provide such combinations of Network Elements on rates, terms and conditions that are just, reasonable, and non-discriminatory and in accordance with the terms and conditions of this Agreement, Act, all applicable Federal and State rules and law.

4.1.1 For purposes of this Section, references to "Currently Combined" Network Elements shall mean that the particular Network Elements requested by AT&T are, in fact, already combined by BellSouth in the BellSouth network at the location of AT&T's order. A customer may or may not be utilizing this combination at the time of ordering. "Ordinarily Combined" Network Elements shall be provided to AT&T pursuant to 47 CFR 51.315. References to "Not Typically Combined" Network Elements shall mean that the particular Network Elements requested by AT&T are not elements that BellSouth combines for its use in its network and shall be made available to AT&T pursuant to the BFR/NBR process.

4.1.2 Upon request, BellSouth shall perform the functions necessary to combine unbundled Network Elements in any manner, even if those elements are not ordinarily combined in BellSouth's network, provided that such combination is technically feasible and will not undermine the ability of other carriers to obtain

access to unbundled Network Elements or to interconnect with BellSouth's network.

4.1.3 Attachment 2 of this Agreement describes the Network Elements that AT&T and BellSouth have identified as of the Effective Date of this Agreement and are not exclusive. Either Party may identify additional or revised Network Elements as necessary to improve services to end users, to improve network or service efficiencies or to accommodate changing technologies, or end user demand. Upon BellSouth's offering of a new or revised Network Element, BellSouth shall notify AT&T of the existence of and the technical characteristics of the new or revised Network Element. Upon AT&T's identification of a new or revised Network Element, it shall make a request for the Network Element pursuant to Attachment 10 of this Agreement, incorporated herein by this reference.

4.2 Enhanced Extended Links (EELs)

4.2.1 EELs are combinations of unbundled Loops and unbundled dedicated transport as defined in this Attachment, together with any facilities, equipment, or functions necessary to combine those Network Elements. BellSouth shall provide AT&T with non-discriminatory access to EELs where the underlying UNEs are available and in all instances where the requesting carrier meets the eligibility requirements, if applicable.

4.2.2 High-capacity EELs are combinations of Loop and transport UNEs or commingled Loop and transport facilities at the DS1 and/or DS3 level as described in 47 CFR 51.318(b). High-capacity EELs must comply with the service eligibility requirements set forth in 4.2.5 below.

4.2.3 By placing an order for a high-capacity EEL, AT&T thereby certifies that the service eligibility criteria set forth herein are met for access to a converted high-capacity EEL, a new high-capacity EEL, or part of a high-capacity commingled EEL as a UNE. BellSouth shall have the right to audit AT&T's high-capacity EELs as specified below.

4.2.4 If a high-capacity EEL or Ordinarily Combined Network Element is not readily available but can be made available through routine network modifications, as defined by the FCC, AT&T may request BellSouth to perform such routine network modifications. The request may not be used to place fiber. Each request will be handled as a project on an individual case basis. BellSouth will provide a price quote for the request, and upon receipt of authorization by AT&T, BellSouth shall perform the routine network modifications.

4.2.5 Service Eligibility Criteria

4.2.5.1 AT&T must certify for each high-capacity EEL that all of the following service eligibility criteria are met:

4.2.5.1.1 AT&T has received state certification to provide local voice service in the area being served;

4.2.5.2 For each combined circuit, including each DS1 circuit, each DS1 EEL, and each DS1-equivalent circuit on a DS3 EEL:

4.2.5.2.1 1) Each circuit to be provided to each end user will be assigned a local number prior to the provision of service over that circuit;

4.2.5.2.2 2) Each DS1-equivalent circuit on a DS3 EEL must have its own local number assignment so that each DS3 must have at least twenty-eight (28) local voice numbers assigned to it;

4.2.5.2.3 3) Each circuit to be provided to each end user will have 911 or E911 capability prior to provision of service over that circuit;

4.2.5.2.4 4) Each circuit to be provided to each end user will terminate in a collocation arrangement that meets the requirements of 47 CFR 51.318(c);

4.2.5.2.5 5) Each circuit to be provided to each end user will be served by an interconnection trunk over which AT&T will transmit the calling party's number in connection with calls exchanged over the trunk;

4.2.5.2.6 6) For each twenty-four (24) DS1 EELs or other facilities having equivalent capacity, AT&T will have at least one (1) active DS1 local service interconnection trunk over which AT&T will transmit the calling party's number in connection with calls exchanged over the trunk;

4.2.5.2.7 7) Each circuit to be provided to each end user will be served by a switch capable of switching local voice traffic.

4.2.6 BellSouth may, on an annual basis, audit AT&T's records in order to verify compliance with the qualifying service eligibility criteria. The audit shall be conducted by a third party independent auditor, and the audit must be performed in accordance with the standards established by the American Institute for Certified Public Accountants (AICPA). AT&T shall be given 30 days notice of the scheduled audit. BellSouth shall direct its auditor to provide a copy of its report to AT&T at the same time it provides the report to BellSouth. To the extent the independent auditor's report concludes that AT&T failed to comply with the service eligibility criteria, AT&T must true-up any difference in payments, convert

all noncompliant circuits to the appropriate service, and make the correct payments on a going-forward basis. In the event the auditor's report concludes that, AT&T did not comply in any material respect with the service eligibility criteria, AT&T shall reimburse BellSouth for the cost of the independent auditor within 30 days after receiving a statement of such costs. To the extent the auditor's report concludes that AT&T did comply in all material respects with the service eligibility criteria, then AT&T will provide to the auditor a statement of AT&T's costs associated with complying with any requests of the auditor. BellSouth will reimburse AT&T for its reasonable and demonstrable costs associated with the audit within 30 days after receiving AT&T's statement. AT&T will maintain appropriate documentation to support its certifications of compliance with the Service Eligibility Criteria.

4.2.7 In the event AT&T converts special access services to UNEs, BST shall impose any applicable tariffed termination liability provisions in any applicable special access tariffs.

4.3 Rates

4.3.1 The rates for the Currently Combined Network Elements specifically set forth in Exhibit A of this Attachment shall be the rates associated with such combinations. Where a Currently Combined combination is not specifically set forth in Exhibit A, the rate for such Currently Combined combination of Network Elements shall be the sum of the recurring rates for those individual Network Elements in addition to the applicable non-recurring switch-as-is charge set forth in Exhibit A.

4.3.2 The rates for the Ordinarily Combined Network Elements specifically set forth in Exhibit A of this Attachment shall be the non-recurring and recurring charges for those combinations. Where an Ordinarily Combined combination is not specifically set forth in Exhibit A, the rate for such Ordinarily Combined combination of Network Elements shall be the sum of the recurring and non-recurring rates for those individual Network Elements as set forth in Exhibit A.

4.3.3 To the extent AT&T requests a Combination for which BST does not have methods and procedures in place to provide such Combination, rates and/or methods or procedures for such Combination will be developed pursuant to the BFR process.

5 Dedicated Transport and Dark Fiber Transport

5.1 Dedicated Transport. Dedicated Transport is defined as BellSouth's transmission facilities between wire centers or switches owned by BellSouth, or between wire centers or switches owned by BellSouth and switches owned by AT&T. Including

but not limited to DS1, DS3 and OCn level services, as well as dark fiber, dedicated to AT&T. BellSouth shall not be required to provide access to OCn level Dedicated Transport under any circumstances pursuant to this Agreement. In addition, except as set forth in Section 5.2 below, BellSouth shall not be required to provide to AT&T unbundled access to Dedicated Transport that does not connect a pair of wire centers or switches owned by BellSouth ("Entrance Facilities").

5.2 Transition for DS1 and DS3 Dedicated Transport Including DS1 and DS3 Entrance Facilities

5.2.1 For purposes of this Section 5.2, the Transition Period for the Embedded Base of DS1 and DS3 Dedicated Transport, Embedded Base Entrance Facilities and for Excess DS1 and DS3 Dedicated Transport, is the twelve (12) month period beginning March 11, 2005 and ending March 10, 2006.

5.2.2 For purposes of this Section 5.2 Embedded Base means DS1 and DS3 Dedicated Transport that were in service for AT&T as of March 10, 2005 in those wire centers that, as of such date, met the criteria set forth in Section 5.2.6.1 or 5.2.6.2. Subsequent disconnects or loss of end users shall be removed from the Embedded Base.

5.2.3 For purposes of this Section 5, Embedded Base Entrance Facilities means Entrance Facilities that were in service for AT&T as of March 10, 2005. Subsequent disconnects or loss of customers shall be removed from the Embedded Base.

5.2.4 For purposes of this Section 5, Excess DS1 and DS3 Dedicated Transport means those AT&T DS1 and DS3 Dedicated Transport facilities in service as of March 10, 2005, in excess of the caps set forth in Section 5.4.6. Subsequent disconnects and loss of end users shall be removed from Excess DS1 and DS3 Loops.

5.2.5 For purposes of this Section 5.2, a Business Line, Wire Center, and Fiber-Based Collocator is as defined in 47 C.F.R. § 51.5.

5.2.6 Notwithstanding anything to the contrary in this Agreement, BellSouth shall make available Dedicated Transport as described in this Section 5.2 only for AT&T's Embedded Base during the Transition Period:

5.2.6.1 DS1 Dedicated Transport where both wire centers at the end points of the route contain 38,000 or more Business Lines or four (4) or more fiber-based collocators.

5.2.6.2 DS3 Dedicated Transport where both wire centers at the end points of the route contain 24,000 or more Business Lines or three (3) or more fiber-based collocators.

5.2.6.3 A list of wire centers meeting the criteria set forth in Section 5.2.6.1 or 5.2.6.2 above as of March 10, 2005, is available on BellSouth's Interconnection Services Web site at www.interconnection.bellsouth.com, as (Initial Wire Center List).

5.2.6.4 Notwithstanding anything to the contrary in this Agreement, BellSouth shall make available Entrance Facilities only for AT&T's Embedded Base Entrance Facilities and only during the Transition Period.

5.2.6.5 Notwithstanding the Effective Date of this Agreement, during the Transition Period, the rates for AT&T's Embedded Base of DS1 and DS3 Dedicated Transport and for AT&T's Excess DS1 and DS3 Dedicated Transport, as described in this Section 5.2, shall be as set forth in Exhibit B, and the rates for AT&T's Embedded Base Entrance Facilities as described in this Section 5.2 shall be as set forth in Exhibit A.

5.2.6.5.1 On the effective date of this agreement, BellSouth may assess a true up charge as necessary, back to March 11, 2005 to collect any transitional charges applicable to AT&T's Embedded Base of DS1 and DS3 Loops and Embedded Base Entrance Facilities that were not collected for the period between March 11, 2005 and the effective date of this Agreement. Although true up charges may be assessed back to March 11, 2005, no late payments or penalties may be calculated where AT&T timely pays the true up charge within the billing cycle time allotted from receipt of the true up bill.

5.2.6.6 The Transition Period shall apply only to (1) AT&T's Embedded Base and Embedded Base Entrance Facilities; and (2) AT&T's Excess DS1 and DS3 Dedicated Transport. AT&T shall not add new Entrance Facilities pursuant to this Agreement. Further, AT&T shall not add new DS1 or DS3 Dedicated Transport as described in this Section 5.2 pursuant to this Agreement, except pursuant to the self-certification process as set forth in Section 1.6 of this Attachment and as set forth in Section 5.2.6.10 below.

5.2.6.7 Once a wire center exceeds either of the thresholds set forth in Section 5.2.6.1, no future DS1 Dedicated Transport unbundling will be required in that wire center.

5.2.6.8 Once a wire center exceeds either of the thresholds set forth in Section 5.2.6.2, no future DS3 Dedicated Transport will be required in that wire center.

5.2.6.9 No later than December 9, 2005 AT&T shall submit spreadsheet(s) identifying all of the Embedded Base of circuits, Embedded Base Entrance Facilities, and Excess DS1 and DS3 Dedicated Transport to be either disconnected or converted to other BellSouth services) pursuant to Section 1.6. The Parties agree to work cooperatively to confirm that the facilities on the spreadsheet are the facilities to be included in AT&T's Subsequent Embedded Base. The Parties shall negotiate a project schedule for the Conversion of the Embedded Base, Embedded Base

Entrance Facilities and Excess DS1 and DS3 Dedicated Transport. BellSouth shall charge the non-recurring switch-as-is rate for these conversions.

5.2.6.9.1 If AT&T fails to submit the spreadsheet(s) specified in Section 5.2.6.9 above for at least 95% of its Embedded Base, Embedded Base Entrance Facilities and Excess DS1 and DS3 Dedicated Transport prior to December 9, 2005, BellSouth will identify AT&T's remaining Embedded Base, Embedded Base Entrance Facilities and Excess DS1 and DS3 Dedicated Transport, if any, and will transition such circuits to the equivalent tariffed BellSouth service(s). Those circuits identified and transitioned by BellSouth pursuant to this Section 5.2.6.9.1 shall be subject to all applicable disconnect charges as set forth in this Agreement and the full nonrecurring charges for installation of the equivalent tariffed BellSouth service as set forth in BellSouth's tariffs. If it is determined that AT&T failed to submit spreadsheets or to convert 5% or less of AT&T's Embedded Base, Embedded Base Entrance Facilities and Excess DS1 and DS3 Dedicated Transport, BellSouth will not convert such 5% or less of its Embedded Base and Excess DS1 and DS3 Loops, but will alert AT&T of the 5% or less of the Embedded Base and Excess DS1 and DS3 Loops that was not converted by AT&T and allow AT&T thirty (30) days to convert such DS1 and DS3 Loops. To the extent that AT&T fails to convert the remaining Embedded Base and Excess DS1 and DS3 Loops within such thirty (30) day period, BellSouth will identify and transition such circuits as described in this paragraph.

5.2.6.9.2 For Embedded Base circuits, Embedded Base Entrance Facilities and Excess DS1 and DS3 Dedicated Transport converted pursuant to Section 5.1.6.9 or transitioned pursuant to 5.1.6.9.1, the applicable recurring tariff charge shall apply to each circuit as of the earlier of the date each circuit is converted or transitioned, as applicable, or March 11, 2006.

5.2.6.10 <u>Modifications and Updates to the Wire Center List and Subsequent Transition Periods</u>

5.2.6.10.1 In the event BellSouth identifies additional wire centers that meet the criteria set forth in Section 5.2.6.1 or 5.2.6.2, but that were not included in the Initial Wire Center List, BellSouth shall include such additional wire centers in CNL. Each such list of additional wire centers shall be considered a Subsequent Wire Center List.

5.2.6.10.2 Effective fourteen (14) days after the date of a BellSouth CNL providing a Subsequent Wire Center List, BellSouth shall not be required to provide DS1 and DS3 Dedicated Transport, as applicable, in such additional wire center(s), except pursuant to the self-certification process as set forth in Section 1.6 of this Attachment.

5.2.6.10.3 For purposes of Section 5.2.6.10, BellSouth shall make available DS1 and DS3 Dedicated Transport that was in service for AT&T in a wire center on the Subsequent Wire Center List as of the fourteen (14th) day after the date of BellSouth's CNL identifying the Subsequent Wire Center List (Subsequent Embedded Base) until one hundred and twenty (120) days after the fourteenth (14th) day from the date of BellSouth's CNL identifying the Subsequent Wire Center List (Subsequent Transition Period).

5.2.6.10.4 Subsequent disconnects or loss of end users shall be removed from the Subsequent Embedded Base.

5.2.6.10.5 The rates set forth in Exhibit B shall apply to the Subsequent Embedded Base during the Subsequent Transition Period.

5.2.6.10.6 No later than sixty (60) days from BellSouth's CNL identifying the Subsequent Wire Center List AT&T shall submit a spreadsheet(s) identifying the Subsequent Embedded Base of circuits to be disconnected or converted to other BellSouth services. The Parties shall negotiate a project schedule for the Conversion of the Subsequent Embedded Base.

5.2.6.10.6.1 If AT&T fails to submit the spreadsheet(s) specified in Section 5.1.6.10.6 above for 95% or more of its Subsequent Embedded Base within sixty (60) days after the date of BellSouth's CNL identifying the Subsequent Wire Center List, BellSouth will identify AT&T's remaining Subsequent Embedded Base, if any, and will transition such circuits to the equivalent tariffed BellSouth service(s). Those circuits identified and transitioned by BellSouth shall be subject to the applicable disconnect charges as set forth in this Agreement and the full nonrecurring charges for installation of the equivalent tariffed BellSouth service as set forth in BellSouth's tariffs. If it is determined that AT&T failed to submit spreadsheets or to convert 5% or less of its Subsequent Embedded Base, BellSouth will not convert such 5% or less of AT&T's Subsequent Embedded Base, but will alert AT&T of the 5% or less of its Subsequent Embedded Base that was not converted by AT&T and allow AT&T thirty (30) days to convert such 5% or less of its Subsequent Embedded Base. To the extent AT&T fails to convert the remaining Subsequent Embedded Base within such thirty (30) day period, BellSouth will identify and transition such circuits as described in this paragraph.

5.2.6.10.6.2 For Subsequent Embedded Base circuits converted pursuant to Section 5.2.6.10.6 or transitioned pursuant to Section 5.2.6.10.6.1, the applicable recurring tariff charges shall apply as of the earlier of the date each circuit is converted or transitioned, as applicable, or the first day after the end of the Subsequent Transition Period.

5.3 BellSouth shall:

5.3.1 Provide AT&T exclusive use of Dedicated Transport to a particular customer or carrier, or shared use of the features, functions, and capabilities of interoffice transmission facilities shared by more than one customer or carrier;

5.3.2 Provide all technically feasible features, functions, and capabilities of the transport facility;

5.3.3 Permit, to the extent technically feasible, AT&T to connect such interoffice facilities to equipment designated by AT&T, including but not limited to, AT&T's collocated facilities; and

5.3.4 Permit, to the extent technically feasible, AT&T to obtain the functionality provided by BellSouth's digital cross-connect systems.

5.4 <u>Dedicated Transport</u>

5.4.1 BellSouth shall offer Dedicated Transport in each of the following ways:

5.4.1.1 As capacity on a shared UNE facility.

5.4.1.2 As a circuit (e.g., DS0, DS1, DS3) dedicated to AT&T.

5.4.1.3 As a system (i.e., the equipment and facilities used to provide Dedicated Transport) dedicated to AT&T.

5.4.2 When Dedicated Transport is provided as a circuit or as capacity on a high facility system, it shall be operated in parity with the BellSouth's normal operations practices and shall include (as appropriate):

5.4.2.1 Multiplexing functionality;

5.4.2.2 Grooming functionality; and

5.4.2.3 Redundant equipment and facilities necessary to support protection and restoration.

5.4.3 When Dedicated Transport is provided as a system it shall include suitable transmission facilities and equipment, operated in parity with the BellSouth's normal operations practices as required, which shall include:

5.4.3.1 Transmission equipment such as multiplexers, line terminating equipment, amplifiers, and regenerators;

5.4.3.2 Inter-office transmission facilities such as optical fiber, copper twisted pair, and coaxial cable;

5.4.3.3 Redundant equipment and facilities necessary to support protection and restoration; and

5.4.3.4 Dark Fiber transport provides a fiber optic interface at each end of an unlit fiber cable. When providing dark fiber cable the BellSouth will provide the manufacturers cable characteristics such as multi-mode or single mode and fiber length.

5.4.3.4.1 Dedicated Transport includes the Digital Cross-Connect System (DCS) functionality as an option.

5.4.4 Dedicated Transport may be provided over facilities such as optical fiber, copper twisted pair, and coaxial cable, and shall include transmission equipment such as line terminating equipment, amplifiers, and regenerators.

5.4.5 AT&T may obtain a maximum of ten (10) unbundled DS1 Dedicated Transport circuits or twelve (12) unbundled dedicated DS3 circuits, or their equivalent, for any single route at the UNE rates set forth in Exhibit A for which dedicated DS3 transport is available as unbundled transport. A route is defined as a transmission path between one of BellSouth's wire centers or switches and another of BellSouth's wire centers or switches. A route between two (2) points may pass through one or more intermediate wire centers or switches. Transmission paths between identical end points are the same "route", irrespective of whether they pass through the same intermediate wire centers or switches, if any.

5.4.6 Any request to re-terminate one end of a circuit will require the issuance of new service and disconnection of the existing service and the applicable charges in Exhibit A shall apply, and the re-terminated circuit shall be considered a new circuit as of the installation date.

5.4.7 If Dedicated Transport is not readily available but can be made available through routine network modifications, as defined by the FCC, AT&T may request BellSouth to perform such routine network modifications. The request may not be used to place fiber cable. BellSouth will provide a price quote for the request, and upon authorization and an error free LSR from AT&T, BellSouth shall perform the routine network modifications within BellSouth's standard Loop provisioning interval. Where BellSouth has recovered the costs for a routine network modification through its recurring and nonrecurring charges for the element provided, BellSouth will not seek to double recover such costs.

5.4.8 <u>Technical Requirements</u>

5.4.8.1 The entire designated transmission service (e.g., DS0, DS1, DS3) shall be dedicated to AT&T designated traffic.

5.4.8.2 For DS1 or DS3 circuits, Dedicated Transport shall at a minimum meet the performance, availability, jitter, and delay requirements specified for Customer

Interface to Central Office (CI to CO) connections in the applicable industry standards.

5.4.9 BellSouth shall offer the following interface transmission rates for Dedicated Transport:

5.4.9.1 DS0 Equivalent;

5.4.9.2 DS1;

5.4.9.3 DS3; and

5.4.9.4 SDH (Synchronous Digital Hierarchy) Standard interface rates are in accordance with International Telecommunications Union (ITU) Recommendation G.707 and Plesiochronous Digital Hierarchy (PDH) rates per ITU Recommendation G.704.

5.4.10 BellSouth shall design Dedicated Transport according to its network infrastructure. AT&T shall specify the termination points for Dedicated Transport.

5.4.11 At a minimum, Dedicated Transport shall meet each of the requirements set forth in the applicable industry technical references. Absent any applicable industry standards, BellSouth's Technical References shall apply in a nondiscriminatory manner consistent with 47 CFR 51.311b.

5.5 <u>Unbundled Channelization (Multiplexing)</u>

5.5.1 To the extent AT&T is purchasing DS1 or DS3 or STS-1 Dedicated Transport pursuant to this Agreement, Unbundled Channelization (UC) provides the optional multiplexing capability that will allow a DS1 (1.544 Mbps) or DS3 (44.736 Mbps) or STS-1 (51.84 Mbps) UNE or collocation cross connect to be multiplexed or channelized at a BellSouth central office. Channelization can be accomplished through the use of a multiplexer or a digital cross connect system at the discretion of BellSouth. Once UC has been installed, AT&T may request channel activation on an as needed basis and BellSouth shall connect the requested facilities via Central Office Channel Interfaces (COCIs). The COCI must be compatible with the lower capacity facility and ordered with the lower capacity facility. This service is available as defined in NECA 4.

5.5.2 BellSouth shall make available the following channelization systems and interfaces:

5.5.2.1 DS1 Channelization System: channelizes a DS1 signal into a maximum of twenty-four (24) DS0s. The following Central Office Channel Interfaces (COCI) are available: Voice Grade, Digital Data and ISDN.

5.5.2.2 DS3 Channelization System: channelizes a DS3 signal into a maximum of twenty-eight (28) DS1s. A DS1 COCI is available with this system.

5.5.2.3 STS-1 Channelization System: channelizes a STS-1 signal into a maximum of twenty-eight (28) DS1s. A DS1 COCI is available with this system.

5.5.2.4 AMI and B8ZS line coding with either Super Frame (SF) and Extended Super Frame (ESF) framing formats will be supported as an optional feature on DS1 facilities.

5.5.3 Technical Requirements

5.5.3.1 In order to assure proper operation with BellSouth provided central office multiplexing functionality, AT&T's channelization equipment must adhere strictly to form and protocol standards. AT&T must also adhere to such applicable industry standards for the multiplex channel bank, for voice frequency encoding, for various signaling schemes, and for sub rate digital access.

5.5.3.2 TR 73501 LightGate®Service Interface and Performance Specifications, Issue D, June 1995

5.6 Dark Fiber Transport

5.6.1 Unused Transmission Media includes existing Loops and interoffice transmission facilities both lit and unlit, defined as set forth in FCC Rule 51.319 that is not used for existing service or maintenance of existing service or defective or in the case of dark fiber as outlined in paragraph 5.6.2. Except as set forth in Section 5.6.3 below, BellSouth shall not be required to provide access to Dark Fiber Transport Entrance Facilities pursuant to this Agreement.

5.6.2 Dark Fiber Transport is strands of optical fiber existing in aerial or underground structure. BellSouth will not provide line terminating elements, regeneration or other electronics necessary for AT&T to utilize Dark Fiber Transport. If the requested fiber section has any intervening (i.e., lightwave repeater (regenerator or optical amplifier)) equipment interspliced to it BellSouth will remove such equipment at AT&T's request subject to time and charges required to remove this equipment.

5.6.3 Transition for Dark Fiber Transport and Dark Fiber Transport Entrance Facilities

5.6.3.1 For purposes of this Section 5.6.3, the Transition Period for the Embedded Base of Dark Fiber Transport is the eighteen (18) month period beginning March 11, 2005 and ending September 10, 2006.

5.6.3.2 For purposes of this Section 5.6.3, Embedded Base means Dark Fiber Transport that was in service for AT&T as of March 10, 2005 in those wire centers that, as of such date, met the criteria set forth in 5.6.3.4.1. Subsequent disconnects or loss of end users shall be removed from the Embedded Base.

5.6.3.3 For purposes of this Section 5.6.3, a Business Line, Wire Center, and Fiber-Based Collocator is as defined in 47 C.F.R. § 51.5.

5.6.3.4 Notwithstanding anything to the contrary in this Agreement, BellSouth shall make available Dark Fiber Transport as described in this Section 5.6.3 only for AT&T's Embedded Base during the Transition Period:

5.6.3.4.1 Dark Fiber Transport where both wire centers at the end points of the route contain 24,000 or more Business Lines or three (3) or more fiber-based collocators.

5.6.3.5 A list of wire centers meeting the criteria set forth in Section 5.6.3.4 above as of March 10, 2005, ("Initial List") is available on BellSouth's Interconnection Services Web site at www.interconnection.bellsouth.com.

5.6.3.6 Notwithstanding the Effective Date of this Agreement, during the Transition Period, the rates for AT&T's Embedded Base of Dark Fiber Transport as described in Section 5.6.3.2 shall be as set forth in Exhibit B and the rates for AT&T's Embedded Base of Dark Fiber Transport Entrance Facilities as described in Section 5.6.3 shall be as set forth in Exhibit A.

5.6.3.6.1 On the effective date of this agreement, BellSouth may assess a true up charge as necessary, back to March 11, 2005 to collect any transitional charges applicable to AT&T's Embedded Base of Dark Fiber Transport that were not collected for the period between March 11, 2005 and the effective date of this Agreement. Although true up charges may be assessed back to March 11, 2005, no late payments or penalties may be calculated where AT&T timely pays the true up charge within the billing cycle time allotted from receipt of the true up bill.

5.6.3.7 The Transition Period shall apply only to AT&T's Embedded Base of Dark Fiber Transport and Dark Fiber Entrance Facilities. AT&T shall not add new Dark Fiber Transport as described in this Section 5.6.3 except pursuant to the self-certification process as set forth in Section 1.6 of this Attachment and as set forth in Section 5.6.3.10 below. Further, AT&T shall not add new Dark Fiber Entrance Facilities pursuant to this Agreement.

5.6.3.8 Once a wire center exceeds either of the thresholds set forth in Section 5.6.3.4.1, no future Dark Fiber Transport unbundling will be required in that wire center.

5.6.3.9 No later than June 10, 2006 AT&T shall submit spreadsheet(s) identifying all of the Embedded Base of Dark Fiber Transport and Dark Fiber Entrance Facilities to be either disconnected or converted to other BellSouth services as Conversions pursuant to Section 1.6. The Parties shall negotiate a project schedule for the Conversion of the Embedded Base.

5.6.3.9.1 If AT&T fails to submit the spreadsheet(s) specified in Section 5.6.3.9 above for all of its Embedded Base prior to June 10, 2006, BellSouth will identify AT&T's remaining Embedded Base, if any, and will transition such circuits to the equivalent tariffed BellSouth service(s). Those circuits identified and transitioned by BellSouth pursuant to this Section 5.6.3.9.1 shall be subject to all applicable disconnect charges as set forth in this Agreement and the full nonrecurring charges for installation of the equivalent tariffed BellSouth service as set forth in BellSouth's tariffs.

5.6.3.9.2 For Embedded Base circuits converted pursuant to Section 5.6.3.9 or transitioned pursuant to 5.6.3.9.1, the applicable recurring tariff charge shall apply to each circuit as of the earlier of the date each circuit is converted or transitioned, as applicable, or September 11, 2006.

5.6.3.10 Modifications and Updates to the Wire Center List and Subsequent Transition Periods

5.6.3.10.1 In the event BellSouth identifies additional wire centers that meet the criteria set forth in Section 5.6.3.4.1, but that were not included in the Initial Wire Center List, BellSouth shall include such additional wire centers in a CNL. Each such list of additional wire centers shall be considered a “Subsequent Wire Center List”.

5.6.3.10.2 Effective fourteen (14) days after the date of a BellSouth CNL providing a Subsequent Wire Center List, BellSouth shall not be required to provide unbundled access to Dark Fiber Transport, as applicable, in such additional wire center(s), except pursuant to the self-certification process as set forth in Section 1.6 of this Attachment.

5.6.3.10.3 For purposes of Section 5.6.3.10, BellSouth shall make available Dark Fiber Transport that were in service for AT&T in a wire center on the Subsequent Wire Center List as of the tenth (14th) day after the date of BellSouth’s CNL identifying the Subsequent Wire Center List (Subsequent Embedded Base) until one hundred and twenty (120) days after the fourteenth (14th) day from the date of BellSouth's CNL identifying the Subsequent Wire Center List (Subsequent Transition Period).

5.6.3.10.4 Subsequent disconnects or loss of end users shall be removed from the Subsequent Embedded Base.

5.6.3.10.5 The rates set forth in Exhibit B shall apply to the Subsequent Embedded Base during the Subsequent Transition Period.

5.6.3.10.6 No later than sixty (60) days from BellSouth's CNL identifying the Subsequent Wire Center List AT&T shall submit a spreadsheet(s) identifying the Subsequent Embedded Base of circuits to be disconnected or converted to other BellSouth

services. The Parties agree to work cooperatively to confirm that the facilities on the spreadsheet are the facilities to be included in AT&T's Subsequent Embedded Base. The Parties shall negotiate a project schedule for the Conversion of the Subsequent Embedded Base. BellSouth shall charge the non-recurring switch-as-is rate for these conversions.

5.6.3.10.6.1 If AT&T fails to submit the spreadsheet(s) specified in Section 5.6.3.10.6 above for at least 95% of its Subsequent Embedded Base within sixty (60) days after the date of BellSouth's CNL identifying the Subsequent Wire Center List, BellSouth will identify AT&T's remaining Subsequent Embedded Base, if any, and will transition such circuits to the equivalent tariffed BellSouth service(s). Those circuits identified and transitioned by BellSouth shall be subject to the applicable disconnect charges as set forth in this Agreement and the full nonrecurring charges for installation of the equivalent tariffed BellSouth service as set forth in BellSouth's tariffs. If it is determined that AT&T failed to submit spreadsheets or to convert 5% or less of its Subsequent Embedded Base, BellSouth will not convert such 5% or less of AT&T's Subsequent Embedded Base, but will alert AT&T of the 5% or less of its Subsequent Embedded Base that was not converted by AT&T and allow AT&T thirty (30) days to convert such 5% or less of its Subsequent Embedded Base. To the extent AT&T fails to convert the remaining Subsequent Embedded Base within such thirty (30) day period, BellSouth will identify and transition such circuits as described in this paragraph.

5.6.3.10.6.2 For Subsequent Embedded Base circuits converted pursuant to Section 5.6.3.10.6 or transitioned pursuant to Section 5.6.3.10.6.1, the applicable recurring tariff. Charges shall apply as of the earlier of the date each circuit is converted or transitioned, as applicable, or the first day after the end of the Subsequent Transition Period.

5.7 Rearrangements

5.7.1 A request to move a working AT&T CFA to another AT&T CFA, where both CFAs terminate in the same BellSouth Central Office (Change in CFA), shall not constitute the establishment of new service. The applicable rates are set forth in Exhibit A.

5.7.2 Requests to re-terminate one end of a facility that is not a Change in CFA constitute the establishment of new service and require disconnection of existing service and the applicable rates set forth in Exhibit A shall apply.

5.7.3 Upon request of AT&T, BellSouth shall project manage the Change in CFA or re-termination of a facility as described in Sections 5.7.1 and 5.7.2 above and AT&T may request OC-TS for such orders

5.7.4 BellSouth shall accept a Letter of Authorization (LOA) between AT&T and another carrier that will allow AT&T to connect a facility, or Combination that includes Dedicated Transport to the other carrier's collocation space or to another carrier's CFA associated with higher bandwidth transport.

6. Line Information Database (LIDB) Storage

6.1 The LIDB is a database that stores current information on working telephone numbers and billing account numbers. LIDB data is used by BellSouth's customers that subscribe to LIDB access to facilitate the proper completion of calls and/or the billing of such calls to the appropriate subscriber line, and for fraud prevention.

6.2 LIDB storage shall be available to AT&T when AT&T is a Facility Based Carrier. Such LIDB storage shall be at the request of AT&T to the BellSouth Account Manager. AT&T shall provide initial data, additions, updates and deletions to BellSouth to populate LIDB with AT&T's end user information.

6.3 BellSouth provides access to information in its LIDB, including AT&T end user information to its LIDB customers via queries to LIDB. Information stored in the BellSouth LIDB for AT&T pursuant to this agreement shall be available to BellSouth and its LIDB customers who launch queries to the LIDB.

6.4 BellSouth shall enable AT&T to store in BellSouth's LIDB any subscriber line number or special billing number record.

6.5 BellSouth will administer the data provided by AT&T pursuant to this Agreement in the same manner as BellSouth administers its own end user customer data.

6.6 AT&T is responsible for the completeness and accuracy of the data being provided to BellSouth, and for providing updates and changes in a timely manner.

6.7 When necessary for fraud control measures, BellSouth may perform additions, updates and deletions of AT&T data to the LIDB (e.g., calling card auto-deactivation).

6.8 BellSouth shall provide priority updates to LIDB for AT&T data upon AT&T's request (e.g., to support fraud detection), via password-protected telephone card, facsimile, or electronic mail.

6.9 BellSouth shall perform periodic backup and recovery of all of AT&T's data in LIDB.

6.10 BellSouth shall prevent any access to or use of AT&T data in LIDB by BellSouth personnel that are outside of established administrative and fraud control personnel, or by any other Party that is not authorized by AT&T in writing.

6.11 Upon request by AT&T, BellSouth shall provide AT&T performance of the LIDB Data Screening function, which allows a LIDB to completely or partially deny specific query originators access to LIDB data owned by specific data owners, for Customer Data that is part of an NPA-NXX or RAO-0/1XX wholly or partially owned by AT&T at least at parity with BellSouth Customer Data.

6.12 BellSouth shall not be responsible to AT&T for any lost revenue which may result from BellSouth's administration of the LIDB pursuant to its established practices and procedures as they exist and as they may be changes by BellSouth in its sole discretion from time to time.

6.13 Other LIDB services, such as transport services or LIDB query services, are available pursuant to BellSouth's Tariffs.

6.14 AT&T will not be charged a fee for LIDB storage services provided by BellSouth to AT&T pursuant to this Agreement.

6.15 Sales, use and all other taxes (excluding taxes on BellSouth's income) determined by BellSouth or any other taxing authority to be due to any federal, state or local taxing jurisdiction with respect to the provision of the services set forth herein will be paid by AT&T.

7. Automatic Location Identification/Data Management System (ALI/DMS)

7.1 The ALI/DMS Database contains end user information (including name, address, telephone information, and sometimes special information from the local service provider or end user) used to determine to which PSAP to route the call. The ALI/DMS database is used to provide enhanced routing flexibility for E911. AT&T will be required to provide BellSouth's Vendor weekly updates to the E911 database when AT&T is not purchasing local switching from BellSouth. AT&T shall also be responsible for providing BellSouth with data for submission to the 911/E911 database exactly as AT&T receives it from the end user customer for the purpose of providing 911/E911 service to its end users. When AT&T purchases local switching from BellSouth, BellSouth will provide the updates and submit the information to the 911/E911 database.

7.2 Technical Requirements

7.2.1 BellSouth shall provide AT&T the capability of providing updates to the ALI/DMS database. BellSouth shall provide error reports from the ALI/DMS

database to AT&T after AT&T provides end user information for input into the ALI/DMS database.

7.2.2 AT&T shall conform to the National Emergency Number Association (NENA) recommended standards for LNP and updating the ALI/DMS database.

8. Service Creation Environment and Service Management System (SCE/SMS) Advanced Intelligent Network Access

8.1 BellSouth shall provide AT&T with the information necessary to enter correctly, or format for entry, the information relevant for input into BellSouth's service management system.

8.2 BellSouth shall provide AT&T the same access to design, create, test, and deploy Advanced Intelligent Network-based services at the service management system, through a service creation environment, that BellSouth provides itself.

8.3 BellSouth shall provide access to any and all BellSouth non-proprietary service applications resident in BellSouth's SCP. Such access may be from BellSouth's unbundled Local Switching element or, where technically feasible, from AT&T's switch.

8.4 Service Management Systems provide operational interfaces to allow for provisioning, administration and maintenance of subscriber data and service application data stored in SCPs.

8.5 BellSouth's Service Creation Environment ("SCE") and Service Management System ("SMS") Advanced Intelligent Network ("AIN") Access shall provide AT&T the capability that will allow AT&T to create service applications in a BellSouth Service Creation Environment and deploy those applications in a BellSouth SMS to a BellSouth SCP. AT&T's service applications interact with AIN triggers provisioned on a BellSouth SSP. BellSouth shall provide AT&T access to the BellSouth SCE in a manner equal to what BellSouth provides itself or requesting telecommunications carriers.

8.6 BellSouth's SCE/SMS AIN Access shall provide access to SCE hardware, software, testing and technical support (e.g., help desk, system administrator) resources available to AT&T. Scheduling procedures shall provide AT&T equivalent priority to resources. BellSouth shall provide training, documentation, and technical support that will address use of SCE and SMS access and administrative functions but will not include support for the creation of a specific service application.

8.7 BellSouth SCP shall partition and protect AT&T service logic and data from unauthorized access, execution or other types of compromise.

8.8 When AT&T selects SCE/SMS AIN Access, BellSouth shall provide training, documentation, and technical support to enable AT&T to use BellSouth's SCE/SMS AIN Access to create and administer applications.

8.9 BellSouth shall provide for a secure, controlled access environment in association with its internal use of AIN components. AT&T access will be provided via remote data connection (e.g., dial-in, ISDN).

8.10 BellSouth shall allow AT&T to download data forms and/or tables to BellSouth SCP via BellSouth SMS without intervention from BellSouth.

8.11 When AT&T selects SCE/SMS AIN Access for providing services on AT&T's network, BellSouth and AT&T will work cooperatively to resolve technical and provisioning issues.

9. 911/E911

9.1 If a municipality has converted to E911 service, AT&T will forward 911 calls to the appropriate E911 primary tandem, along with ANI, based upon the current E911 end office to tandem homing arrangement as provided by BellSouth. If the primary tandem trunks are not available, AT&T will alternatively route the call to a designated 7-digit local number residing in the appropriate PSAP. This call will be transported over BellSouth's interoffice network and will not carry the ANI of the calling party, which is in parity with BellSouth's handling of 911 calls from its customers.

9.2 911/E911 Trunks

9.2.1 As provided below, BellSouth shall provide 911/E911 trunk groups provisioned exclusively to carry intraLATA traffic, as designated by AT&T.

9.2.2 As provided below, BellSouth shall provide 911/E911 trunk groups provisioned exclusively to carry interLATA traffic, as designated by AT&T.

9.2.3 BellSouth shall provide SS7 trunks, which provide SS7 interconnection. At AT&T's request, MF trunks may be substituted for SS7 trunks where applicable.

9.2.4 BellSouth shall simultaneously route calls based on dialed digits (in accordance with the standard GR-317-CORE), and Carrier Identification Code (in accordance with the standard GR-394-CORE) over a single SS7 trunk group.

9.3 911 and E911

9.3.1 If AT&T orders Services and Elements, then AT&T is also responsible for providing E911 to its end users. BellSouth agrees to offer access to the 911/E911 network pursuant to the following terms and conditions set forth in this Attachment.

9.3.2 Definition

9.3.2.1 The 911 and E911 are requirements that provide a caller access to the applicable emergency service bureau by dialing a 3-digit universal telephone number (911). 911 Arrangements are arrangements for routing 911 calls from AT&T end users to the appropriate PSAP, passing certain end user information for display at the PSAP answering station based on the class of 911 service (911 or E911) deployed in the area. BellSouth shall provide 911 Arrangements to AT&T in accordance with the provisions below in areas where AT&T is authorized to provide local exchange service and BellSouth is the 911 service provider. The provisions in this Section apply only to 911 Arrangements. The 911 functionality for Local Services Resale shall be governed by provisions in Attachment 1 of this Agreement incorporated herein by reference. In providing 911 Arrangements to AT&T, BellSouth shall comply with all laws, rules and regulations concerning emergency services. The 911 and E911 functions provided to AT&T shall be at least equal in quality and functionality with the support and services that the BellSouth provides to its own retail end users.

9.3.3 Requirements

9.3.3.1 911 Service Provisioning. For 911 service, BellSouth will provide to AT&T a list consisting of each municipality that subscribes to 911 service. The list will also provide, if known, the E911 conversion date for each municipality and, for network routing purposes, a ten-digit directory number representing the appropriate emergency answering position for each municipality subscribing to 911. AT&T will be required to arrange to accept 911 calls from its end users in municipalities that subscribe to 911 service and translate the 911 call to the appropriate 10-digit directory number as stated on the list provided by BellSouth. AT&T will be required to route that call to BellSouth by installing dedicated facilities from its serving wire center to the appropriate BellSouth tandem or end office. When a municipality converts to E911 service, AT&T will be required to discontinue the 911 procedures and being using E911 procedures.

9.3.3.2 E911 Service Provisioning. For E911 service, AT&T will be required to install a minimum of two dedicated trunks originating from the AT&T serving wire center and terminating to the appropriate E911 tandem. The Serving Wire Center must be in the same LATA as the 911 tandem. The dedicated trunks shall be, at a minimum,

DS-0 level trunks configured as part of a digital (1.544 Mb/s) interface (DS1 facility). Either configuration shall use CAMA-type signaling with multifrequency ("MF") pulsing or SS7/ISUP that will deliver automatic number identification ("ANI") with the voice portion of the call. If SS7/ISUP connectivity will be used, refer to Appendix A of the E911 Local Exchange Carrier Guide for Facility Based Providers that is located on the BellSouth Interconnection website at http://www.interconnection.bellsouth.com./guides. If the user interface is digital, MF pulses, as well as other AC signals, shall be encoded per the u-255 Law convention. AT&T will be required to provide BellSouth daily updates to the E911 database. AT&T will be required to forward 911 calls to the appropriate E911 tandem, along with ANI, based upon the current E911 end office to tandem homing arrangement as provided by BellSouth. If the E911 tandem trunks are not available, AT&T will be required to route the call to a designated 10-digit local number residing in the appropriate PSAP. This call will be transported over BellSouth's interoffice network and will not carry the ANI of the calling party. AT&T shall be responsible for providing BellSouth with complete and accurate data for submission to the 911/E911 database for the purpose of providing 911/E911 to its end users.

9.3.4 Technical Requirements

9.3.4.1 At AT&T's request, BellSouth and AT&T shall establish dedicated trunk groups to route E911 calls placed by AT&T end users to the appropriate BellSouth 911 tandem or selective router. Trunks shall be established as CAMA MF trunks or SS7/ISUP signalling. If SS7/ISUP connectivity will be used, refer to Appendix A of the E911 Local Exchange Carrier Guide for Facility Based Providers that is located on the BellSouth Interconnection website at http://www.interconnection.bellsouth.com/guides.

9.3.4.2 BellSouth shall provision 911 trunks within 30 calendar days of receipt of AT&T's order, or such shorter time as may be established by law, rule, regulation or Commission or F.C.C. order. Alternatively, at its option, AT&T may provide the trunks. Regardless of which party provides the trunks, prior to placing a trunk in service BellSouth and AT&T shall cooperate in testing to assure proper functioning of the E911 system for calls delivered over the trunk.

9.3.4.3 BellSouth shall assure sufficient capacity at the 911 tandem or selective router to meet AT&T's requests for interconnection within 30 calendar days after receipt of the request. There shall be no limit on the number of trunks used by AT&T to connect to the 911 tandem or selective router. Interconnection to the 911 tandem shall be established to provide path and route diversity.

9.3.4.4 BellSouth shall provide the following information to AT&T, and shall promptly notify AT&T of any changes:

9.3.4.4.1 BellSouth processes and requirements for ordering trunks for 911 trunks and interconnection to the 911 tandem or selective router.

9.3.4.4.2 Trunk group specifications.

9.3.4.4.3 E911 tandem CLLI codes, circuit IDs, point codes, LEC order number, and IS code and address.

9.3.4.4.4 Description of BellSouth's diversity for facility routing.

9.3.4.4.5 Maintenance procedures for 911 trunk groups, including, but not limited to, contact names and numbers, escalation lists, and the hours that maintenance is available.

9.3.5 E911 Call Routing and Provision Customer Information to PSAP

9.3.5.1 BellSouth shall route E911 calls delivered by AT&T to BellSouth's 911 tandems or selective routers to PSAPs in the same manner that BellSouth routes E911 calls from its own retail customers. BellSouth shall provide and validate AT&T customer information from the ALI/ANI database in the same manner BellSouth provides and validates information for its own retail customers.

9.3.5.2 BellSouth shall automatically update the ALI/DMS databases with respect to NPA split conversions.

9.3.6 Master Street Address Guide ("MSAG")

9.3.6.1 BellSouth shall provide AT&T monthly, free of charge, a complete copy of the MSAG via CD Rom which is usable with personal computers. BellSouth shall cooperate with AT&T to ensure the accuracy of information about AT&T Customers in the MSAG. If BellSouth discovers an error in the MSAG, BellSouth shall notify AT&T. It shall be AT&T's responsibility to notify the PSAP to assist them in correcting the errors in the MSAG concerning AT&T Customers.

9.3.7 Other

9.3.7.1 BellSouth shall provide AT&T with 10-digit emergency telephone numbers for operator handling of emergency calls, at least equal in quality and functionality with the provisions of such information to itself.

9.3.8 Technical References

9.3.8.1 BellSouth shall provide 911 Arrangements to AT&T based upon modified NENA 2 Recommendations.

9.3.9 Rates. Charges for 911/E911 service are borne by the municipality purchasing the service. BellSouth will impose no charge on AT&T beyond applicable charges for BellSouth trunking arrangements.

9.3.10 The 911 and E911 functions provided to AT&T shall be at least at parity with the support and services that BellSouth provides to its end users for such similar functionality.

9.3.11 Detailed Practices and Procedures. The detailed practices and procedures contained in the E911 Local Exchange Carrier Guide For Facility-Based Providers as amended from time to time during the term of this Agreement will determine the appropriate practices and procedures for BellSouth and AT&T to follow in providing 911/E911 services.

9.4 911 PBX Locate Service®. 911 PBX Locate Service is comprised of a database capability and a separate transport component.

9.4.1 Description of Product. The transport component provides a dedicated trunk path from a Private Branch Exchange (PBX) switch to the appropriate BellSouth 911 tandem.

9.4.1.1 The database capability allows AT&T to offer an E911 service to its PBX End Users that identifies to the PSAP the physical location of the AT&T PBX 911 End User station telephone number for the 911 call that is placed by the End User.

9.4.2 AT&T may order either the database capability or the transport component as desired or AT&T may order both components of the service.

9.4.3 911 PBX Locate Database Capability. AT&T's End User or AT&T's End User's database management agent (DMA) must provide the End User PBX station telephone numbers and corresponding address and location data to BellSouth's 911 database vendor. The data will be loaded and maintained in BellSouth's ALI database.

9.4.4 Ordering, provisioning, testing and maintenance shall be provided by AT&T pursuant to the 911 PBX Locate Marketing Service Description (MSD) that is located on the BellSouth Interconnection Web site.

9.4.5 AT&T's End User, or AT&T's End User DMA must provide ongoing updates to BellSouth's 911 database vendor within a commercially reasonable timeframe of all PBX station telephone number adds, moves and deletions. It will be the responsibility of AT&T to ensure that the End User or DMA maintain the data pertaining to each End User's extension managed by the 911 PBX Locate Service product. AT&T should not submit telephone number updates for specific PBX station telephone numbers that are submitted by AT&T's End User, or AT&T's End User DMA under the terms of 911 PBX Locate product.

9.4.5.1 AT&T must provision all PBX station numbers in the same LATA as the E911 tandem.

9.4.6 AT&T agrees to release, indemnify, defend and hold harmless BellSouth from any and all loss, claims, demands, suits, or other action, or any liability whatsoever, whether suffered, made, instituted or asserted by AT&T's End User or by any other party or person, for any personal injury to or death of any person or persons, or for any loss, damage or destruction of any property, whether owned by AT&T or others, or for any infringement or invasion of the right of privacy of any person or persons, caused or claimed to have been caused, directly or indirectly, by the installation, operation, failure to operate, maintenance, removal, presence, condition, location or use of PBX Locate Service features or by any services which are or may be furnished by BellSouth in connection therewith, including but not limited to the identification of the telephone number, address or name associated with the telephone used by the party or parties accessing 911 services using 911 PBX Locate Service hereunder, except to the extent caused by BellSouth's gross negligence or wilful misconduct. AT&T is responsible for assuring that its authorized End Users comply with the provisions of these terms and that unauthorized persons do not gain access to or use the 911 PBX Locate Service through user names, passwords, or other identifiers assigned to AT&T's End User or DMA pursuant to these terms. Specifically, AT&T's End User or DMA must keep and protect from use by any unauthorized individual identifiers, passwords, and any other security token(s) and devices that are provided for access to this product.

9.4.7 AT&T may only use BellSouth PBX Locate Service solely for the purpose of validating and correcting 911 related data for AT&T's End Users' telephone numbers for which it has direct management authority.

9.4.8 <u>911 PBX Locate Transport Component.</u> The 911 PBX Locate Service transport component requires AT&T to order a CAMA type dedicated trunk from AT&T's End User premise to the appropriate BellSouth 911 tandem pursuant to the following provisions.

9.4.8.1 Except as otherwise set forth below, a minimum of two (2) End User specific, dedicated 911 trunks are required between the AT&T's End User premise and the

BellSouth 911 tandem as described in BellSouth's TR 73576 and in accordance with the 911 PBX Locate Marketing Service Description located on the BellSouth Interconnection Web site. AT&T is responsible for connectivity between the End User's PBX and AT&T's switch or POP location. AT&T will then order 911 trunks from their switch or POP location to the BellSouth 911 tandem. The dedicated trunks shall be, at a minimum, DS0 level trunks configured as part of a digital interface (delivered over a AT&T purchased DS1 facility that hands off at a DS1 or higher level digital or optical interface). AT&T is responsible for ensuring that the PBX switch is capable of sending the calling station's Direct Inward Dial (DID) telephone number to the BellSouth 911 tandem in a specified Multi-frequency (MF) Address Signaling Protocol. If the PBX switch supports Primary Rate ISDN (PRI) and the calling stations are DID numbers, then the 911 call can be transmitted using PRI, and there will be no requirement for the PBX Locate Transport component.

9.4.9 Ordering and Provisioning. AT&T will submit an Access Service Request (ASR) to BellSouth to order a minimum of two (2) End User specific 911 trunks from its switch or POP location to the BellSouth 911 tandem.

9.4.9.1 Testing and maintenance shall be provided by AT&T pursuant to the 911 PBX Locate Marketing Service description that is located on the BellSouth Interconnection Web site.

9.4.10 Rates. Rates for the 911 PBX Locate Service database component are set forth in Exhibit A. Trunks and facilities for 911 PBX Locate transport component may be ordered by AT&T pursuant to the terms and conditions set forth in Attachment 3.

UNBUNDLED NETWORK ELEMENTS - South Carolina														Attachment: 2 Exh. A			
CATEGORY	RATE ELEMENTS	Interim	Zone	BCS	USOC	RATES($)					Svc Order Submitted Elec per LSR	Svc Order Submitted Manually per LSR	Incremental Charge - Manual Svc Order vs. Electronic-1st	Incremental Charge - Manual Svc Order vs. Electronic-Add'l	Incremental Charge - Manual Svc Order vs. Electronic-Disc 1st	Incremental Charge - Manual Svc Order vs. Electronic-Disc Add'l
						Rec	Nonrecurring		Nonrecurring Disconnect		OSS Rates($)					
							First	Add'l	First	Add'l	SOMEC	SOMAN	SOMAN	SOMAN	SOMAN	SOMAN
	The "Zone" shown in the sections for stand-alone loops or loops as part of a combination refers to Geographically Deaveraged UNE Zones. To view Geographically Deaveraged UNE Zone Designations by Central Office, refer to internet Website: http://www.interconnection.bellsouth.com/become_a_clec/html/interconnection.htm															
OPERATIONS SUPPORT SYSTEMS (OSS) - "REGIONAL RATES"																
	NOTE: (1) CLEC should contact its contract negotiator if it prefers the "state specific" OSS charges as ordered by the State Commissions. The OSS charges currently contained in this rate exhibit are the BellSouth "regional" service ordering charges. CLEC may elect either the state specific Commission ordered rates for the service ordering charges, or CLEC may elect the regional service ordering charge, however, CLEC can not obtain a mixture of the two regardless if CLEC has a interconnection contract established in each of the 9 states.															
	NOTE: (2) Any element that can be ordered electronically will be billed according to the SOMEC rate listed in this category. Please refer to BellSouth's Local Ordering Handbook (LOH) to determine if a product can be ordered electronically. For those elements that cannot be ordered electronically at present per the LOH, the listed SOMEC rate in this category reflects the charge that would be billed to a CLEC once electronic ordering capabilities come on-line for that element. Otherwise, the manual ordering charge, SOMAN, will be applied to a CLECs bill when it submits an LSR to BellSouth.															
	OSS - Electronic Service Order Charge, Per Local Service Request (LSR) - UNE Only				SOMEC		5.92	0.00	5.92	0.00						
	OSS - Manual Service Order Charge, Per Local Service Request (LSR) - UNE Only				SOMAN		15.69	0.00	1.97	0.00						
UNE SERVICE DATE ADVANCEMENT CHARGE																
	UNE Expedite Charge per Circuit or Line Assignable USOC, per Day			UAL, UEANL, UCL, UEF, UDF, UEQ, UDL, UENTW, UDN, UEA, UHL, ULC, USL, U1T12, U1T48, U1TD1, U1TD3, U1TDX, U1TO3, U1TS1, U1TVX, UC1BC, UC1BL, UC1CC, UC1CL, UC1DC, UC1DL, UC1EC, UC1EL, UC1FC, UC1FL, UC1GC, UC1GL, UC1HC, UC1HL, UDL12, UDL48, UDLO3, UDLSX, UE3, ULD12, ULD48, ULDD1, ULDD3, ULDDX, ULDO3, ULDS1, ULDVX, UNC1X, UNC3X, UNCDX, UNCNX, UNCSX, UNCVX, UNLD1, UNLD3, UXTD1, UXTD3, UXTS1, U1TUC, U1TUD, U1TUB, U1TUA,NTCVG, NTCUD, NTCD1	SDASP		100.00	100.00								
UNBUNDLED EXCHANGE ACCESS LOOP																
	2-WIRE ANALOG VOICE GRADE LOOP															
	2-Wire Analog Voice Grade Loop - Service Level 1- Zone 1		1	UEANL	UEAL2	14.94	37.92	17.62	23.56	5.32						
	2-Wire Analog Voice Grade Loop - Service Level 1- Zone 2		2	UEANL	UEAL2	21.39	37.92	17.62	23.56	5.32						
	2-Wire Analog Voice Grade Loop - Service Level 1- Zone 3		3	UEANL	UEAL2	26.72	37.92	17.62	23.56	5.32						
	2-Wire Analog Voice Grade Loop - Service Level 1- Zone 1		1	UEANL	UEASL	14.94	37.92	17.62	23.56	5.32						
	2-Wire Analog Voice Grade Loop - Service Level 1- Zone 2		2	UEANL	UEASL	21.39	37.92	17.62	23.56	5.32						
	2-Wire Analog Voice Grade Loop - Service Level 1- Zone 3		3	UEANL	UEASL	26.72	37.92	17.62	23.56	5.32						
	Unbundled Miscellaneous Rate Element, Tag Loop at End User Premise			UEANL	URETL		8.95	0.88								
	Loop Testing - Basic 1st Half Hour			UEANL	URET1		34.23	0.00								
	Loop Testing - Basic Additional Half Hour			UEANL	URETA		19.90	19.90								

UNBUNDLED NETWORK ELEMENTS - South Carolina														Attachment: 2 Exh. A			
CATEGORY		RATE ELEMENTS	Interim	Zone	BCS	USOC	RATES($)					Svc Order Submitted Elec per LSR	Svc Order Submitted Manually per LSR	Incremental Charge - Manual Svc Order vs. Electronic-1st	Incremental Charge - Manual Svc Order vs. Electronic-Add'l	Incremental Charge - Manual Svc Order vs. Electronic-Disc 1st	Incremental Charge - Manual Svc Order vs. Electronic-Disc Add'l
							Rec	Nonrecurring		Nonrecurring Disconnect		OSS Rates($)					
								First	Add'l	First	Add'l	SOMEC	SOMAN	SOMAN	SOMAN	SOMAN	SOMAN
		CLEC to CLEC Conversion Charge Without Outside Dispatch (UVL-SL1)			UEANL	UREWO		15.81	8.96								
		Unbundled Voice Loop, Non-Design Voice Loop, billing for BST providing make-up (Engineering Information - E.I.)			UEANL	UEANM		13.47	13.47								
		Manual Order Coordination for UVL-SL1s (per loop)			UEANL	UEAMC		8.17	8.17								
	2-WIRE Unbundled COPPER LOOP																
		2-Wire Unbundled Copper Loop - Non-Designed Zone 1		1	UEQ	UEQ2X	12.94	36.40	16.10	22.66	4.42						
		2 Wire Unbundled Copper Loop - Non-Designed - Zone 2		2	UEQ	UEQ2X	14.51	36.40	16.10	22.66	4.42						
		2 Wire Unbundled Copper Loop - Non-Designed - Zone 3		3	UEQ	UEQ2X	15.02	36.40	16.10	22.66	4.42						
		Unbundled Miscellaneous Rate Element, Tag Loop at End User Premise			UEQ	URETL		8.95	0.88								
		Manual Order Coordination 2 Wire Unbundled Copper Loop - Non-Designed (per loop)			UEQ	USBMC		8.17	8.17								
		Unbundled Copper Loop, Non-Design Copper Loop, billing for BST providing make-up (Engineering Information - E.I.)			UEQ	UEQMU		13.47	13.47								
		Loop Testing - Basic 1st Half Hour			UEQ	URET1		34.23	0.00								
		Loop Testing - Basic Additional Half Hour			UEQ	URETA		19.90	19.90								
		CLEC to CLEC Conversion Charge Without Outside Dispatch (UCL-ND)			UEQ	UREWO		14.30	7.45								
UNBUNDLED EXCHANGE ACCESS LOOP																	
	2-WIRE ANALOG VOICE GRADE LOOP																
		2-Wire Analog Voice Grade Loop - Service Level 2 w/Loop or Ground Start Signaling - Zone 1		1	UEA, NTCVG	UEAL2	16.68	105.98	68.43	53.05	10.61						
		2-Wire Analog Voice Grade Loop - Service Level 2 w/Loop or Ground Start Signaling - Zone 2		2	UEA, NTCVG	UEAL2	23.13	105.98	68.43	53.05	10.61						
		2-Wire Analog Voice Grade Loop - Service Level 2 w/Loop or Ground Start Signaling - Zone 3		3	UEA, NTCVG	UEAL2	28.46	105.98	68.43	53.05	10.61						
		2-Wire Analog Voice Grade Loop - Service Level 2 w/Reverse Battery Signaling - Zone 1		1	UEA, NTCVG	UEAR2	16.68	105.98	68.43	53.05	10.61						
		2-Wire Analog Voice Grade Loop - Service Level 2 w/Reverse Battery Signaling - Zone 2		2	UEA, NTCVG	UEAR2	23.13	105.98	68.43	53.05	10.61						
		2-Wire Analog Voice Grade Loop - Service Level 2 w/Reverse Battery Signaling - Zone 3		3	UEA, NTCVG	UEAR2	28.46	105.98	68.43	53.05	10.61						
		Switch-As-Is Conversion rate per UNE Loop, Single LSR, (per DS0)			UEA, NTCVG	URESL		21.91	3.15								
		Switch-As-Is Conversion rate per UNE Loop, Spreadsheet, (per DS0)			UEA, NTCVG	URESP		23.32	4.56								
		CLEC to CLEC Conversion Charge without outside dispatch			UEA, NTCVG	UREWO		87.90	36.44								
		Loop Tagging - Service Level 2 (SL2)			UEA, NTCVG	URETL		11.24	1.10								
	4-WIRE ANALOG VOICE GRADE LOOP																
		4-Wire Analog Voice Grade Loop - Zone 1		1	UEA, NTCVG	UEAL4	32.59	132.38	94.83	59.35	14.61						
		4-Wire Analog Voice Grade Loop - Zone 2		2	UEA, NTCVG	UEAL4	43.89	132.38	94.83	59.35	14.61						
		4-Wire Analog Voice Grade Loop - Zone 3		3	UEA, NTCVG	UEAL4	43.38	132.38	94.83	59.35	14.61						
		Switch-As-Is Conversion rate per UNE Loop, Single LSR, (per DS0)			UEA, NTCVG	URESL		21.91	3.15								
		Switch-As-Is Conversion rate per UNE Loop, Spreadsheet, (per DS0)			UEA, NTCVG	URESP		23.32	4.56								
		CLEC to CLEC Conversion Charge without outside dispatch			UEA, NTCVG	UREWO		87.90	36.44								
	2-WIRE ISDN DIGITAL GRADE LOOP																
		2-Wire ISDN Digital Grade Loop - Zone 1		1	UDN	U1L2X	25.21	117.58	80.03	53.05	10.61						
		2-Wire ISDN Digital Grade Loop - Zone 2		2	UDN	U1L2X	32.76	117.58	80.03	53.05	10.61						
		2-Wire ISDN Digital Grade Loop - Zone 3		3	UDN	U1L2X	37.70	117.58	80.03	53.05	10.61						
		CLEC to CLEC Conversion Charge without outside dispatch			UDN	UREWO		91.82	44.25								
	2-WIRE ASYMMETRICAL DIGITAL SUBSCRIBER LINE (ADSL) COMPATIBLE LOOP																
		2 Wire Unbundled ADSL Loop including manual service inquiry & facility reservation - Zone 1		1	UAL	UAL2X	12.19	120.84	70.56	50.37	7.93						
		2 Wire Unbundled ADSL Loop including manual service inquiry & facility reservation - Zone 2		2	UAL	UAL2X	13.71	120.84	70.56	50.37	7.93						

CATEGORY	RATE ELEMENTS	Interim	Zone	BCS	USOC	RATES($)					Svc Order Submitted Elec per LSR	Svc Order Submitted Manually per LSR	Incremental Charge - Manual Svc Order vs. Electronic-1st	Incremental Charge - Manual Svc Order vs. Electronic-Add'l	Incremental Charge - Manual Svc Order vs. Electronic-Disc 1st	Incremental Charge - Manual Svc Order vs. Electronic-Disc Add'l
						Rec	Nonrecurring		Nonrecurring Disconnect		OSS Rates($)					
							First	Add'l	First	Add'l	SOMEC	SOMAN	SOMAN	SOMAN	SOMAN	SOMAN
	2 Wire Unbundled ADSL Loop including manual service inquiry & facility reservation - Zone 3		3	UAL	UAL2X	14.14	120.84	70.56	50.37	7.93						
	2 Wire Unbundled ADSL Loop without manual service inquiry & facility reservaton - Zone 1		1	UAL	UAL2W	12.19	95.81	57.82	50.37	7.93						
	2 Wire Unbundled ADSL Loop without manual service inquiry & facility reservaton - Zone 2		2	UAL	UAL2W	13.71	95.81	57.82	50.37	7.93						
	2 Wire Unbundled ADSL Loop without manual service inquiry & facility reservaton - Zone 3		3	UAL	UAL2W	14.14	95.81	57.82	50.37	7.93						
	CLEC to CLEC Conversion Charge without outside dispatch			UAL	UREWO		86.38	40.48								
2-WIRE HIGH BIT RATE DIGITAL SUBSCRIBER LINE (HDSL) COMPATIBLE LOOP																
	2 Wire Unbundled HDSL Loop including manual service inquiry & facility reservation - Zone 1		1	UHL	UHL2X	9.58	129.52	79.24	50.37	7.93						
	2 Wire Unbundled HDSL Loop including manual service inquiry & facility reservation - Zone 2		2	UHL	UHL2X	10.92	129.52	79.24	50.37	7.93						
	2 Wire Unbundled HDSL Loop including manual service inquiry & facility reservation - Zone 3		3	UHL	UHL2X	11.40	129.52	79.24	50.37	7.93						
	2 Wire Unbundled HDSL Loop without manual service inquiry and facility reservation - Zone 1		1	UHL	UHL2W	9.58	104.49	66.50	50.37	7.93						
	2 Wire Unbundled HDSL Loop without manual service inquiry and facility reservation - Zone 2		2	UHL	UHL2W	10.92	104.49	66.50	50.37	7.93						
	2 Wire Unbundled HDSL Loop without manual service inquiry and facility reservation - Zone 3		3	UHL	UHL2W	11.40	104.49	66.50	50.37	7.93						
	CLEC to CLEC Conversion Charge without outside dispatch			UHL	UREWO		86.32	40.48								
4-WIRE HIGH BIT RATE DIGITAL SUBSCRIBER LINE (HDSL) COMPATIBLE LOOP																
	4 Wire Unbundled HDSL Loop including manual service inquiry and facility reservation - Zone 1		1	UHL	UHL4X	16.02	158.18	107.89	55.12	10.38						
	4-Wire Unbundled HDSL Loop including manual service inquiry and facility reservation - Zone 2		2	UHL	UHL4X	14.33	158.18	107.89	55.12	10.38						
	4-Wire Unbundled HDSL Loop including manual service inquiry and facility reservation - Zone 3		3	UHL	UHL4X	16.84	158.18	107.89	55.12	10.38						
	4-Wire Unbundled HDSL Loop without manual service inquiry and facility reservation - Zone 1		1	UHL	UHL4W	16.02	133.14	95.16	55.12	10.38						
	4-Wire Unbundled HDSL Loop without manual service inquiry and facility reservation - Zone 2		2	UHL	UHL4W	14.33	133.14	95.16	55.12	10.38						
	4-Wire Unbundled HDSL Loop without manual service inquiry and facility reservation - Zone 3		3	UHL	UHL4W	16.84	133.14	95.16	55.12	10.38						
	CLEC to CLEC Conversion Charge without outside dispatch			UHL	UREWO		86.32	40.48								
4-WIRE DS1 DIGITAL LOOP																
	4-Wire DS1 Digital Loop - Zone 1		1	USL, NTCD1	USLXX	79.51	253.03	157.89	44.80	11.73						
	4-Wire DS1 Digital Loop - Zone 2		2	USL, NTCD1	USLXX	136.00	253.03	157.89	44.80	11.73						
	4-Wire DS1 Digital Loop - Zone 3		3	USL, NTCD1	USLXX	229.15	253.03	157.89	44.80	11.73						
	Switch-As-Is Conversion rate per UNE Loop, Single LSR, (per DS1)			USL, NTCD1	URESL		21.91	3.15								
	Switch-As-Is Conversion rate per UNE Loop, Spreadsheet, (per DS1)			USL, NTCD1	URESP		23.32	4.56								
	CLEC to CLEC Conversion Charge without outside dispatch			USL	UREWO		101.30	43.13								
4-WIRE 2.4, 4.8, 9.6, 19.2, 56 OR 64 KBPS DIGITAL GRADE LOOP																
	4 Wire Unbundled Digital Loop 2.4 Kbps - Zone 1		1	UDL, NTCUD	UDL2X	29.93	126.66	89.12	59.35	14.61						
	4 Wire Unbundled Digital Loop 2.4 Kbps - Zone 2		2	UDL, NTCUD	UDL2X	33.99	126.66	89.12	59.35	14.61						
	4 Wire Unbundled Digital Loop 2.4 Kbps - Zone 3		3	UDL, NTCUD	UDL2X	34.74	126.66	89.12	59.35	14.61						
	4 Wire Unbundled Digital Loop 4.8 Kbps - Zone 1		1	UDL, NTCUD	UDL4X	29.93	126.66	89.12	59.35	14.61						
	4 Wire Unbundled Digital Loop 4.8 Kbps - Zone 2		2	UDL, NTCUD	UDL4X	33.99	126.66	89.12	59.35	14.61						
	4 Wire Unbundled Digital Loop 4.8 Kbps - Zone 3		3	UDL, NTCUD	UDL4X	34.74	126.66	89.12	59.35	14.61						
	4 Wire Unbundled Digital Loop 9.6 Kbps - Zone 1		1	UDL, NTCUD	UDL9X	29.93	126.66	89.12	59.35	14.61						
	4 Wire Unbundled Digital Loop 9.6 Kbps - Zone 2		2	UDL, NTCUD	UDL9X	33.99	126.66	89.12	59.35	14.61						
	4 Wire Unbundled Digital Loop 9.6 Kbps - Zone 3		3	UDL, NTCUD	UDL9X	34.74	126.66	89.12	59.35	14.61						
	4 Wire Unbundled Digital 19.2 Kbps		1	UDL, NTCUD	UDL19	29.93	126.66	89.12	59.35	14.61						
	4 Wire Unbundled Digital 19.2 Kbps		2	UDL, NTCUD	UDL19	33.99	126.66	89.12	59.35	14.61						
	4 Wire Unbundled Digital 19.2 Kbps		3	UDL, NTCUD	UDL19	34.74	126.66	89.12	59.35	14.61						

UNBUNDLED NETWORK ELEMENTS - South Carolina

Attachment: 2 Exh. A

CATEGORY	RATE ELEMENTS	Interim	Zone	BCS	USOC	RATES($)					Svc Order Submitted Elec per LSR	Svc Order Submitted Manually per LSR	Incremental Charge - Manual Svc Order vs. Electronic-1st	Incremental Charge - Manual Svc Order vs. Electronic-Add'l	Incremental Charge - Manual Svc Order vs. Electronic-Disc 1st	Incremental Charge - Manual Svc Order vs. Electronic-Disc Add'l
						Rec	Nonrecurring		Nonrecurring Disconnect		OSS Rates($)					
							First	Add'l	First	Add'l	SOMEC	SOMAN	SOMAN	SOMAN	SOMAN	SOMAN
	4 Wire Unbundled Digital Loop 56 Kbps - Zone 1		1	UDL, NTCUD	UDL56	29.93	126.66	89.12	59.35	14.61						
	4 Wire Unbundled Digital Loop 56 Kbps - Zone 2		2	UDL, NTCUD	UDL56	33.99	126.66	89.12	59.35	14.61						
	4 Wire Unbundled Digital Loop 56 Kbps - Zone 3		3	UDL, NTCUD	UDL56	34.74	126.66	89.12	59.35	14.61						
	4 Wire Unbundled Digital Loop 64 Kbps - Zone 1		1	UDL, NTCUD	UDL64	29.93	126.66	89.12	59.35	14.61						
	4 Wire Unbundled Digital Loop 64 Kbps - Zone 2		2	UDL, NTCUD	UDL64	33.99	126.66	89.12	59.35	14.61						
	4 Wire Unbundled Digital Loop 64 Kbps - Zone 3		3	UDL, NTCUD	UDL64	34.74	126.66	89.12	59.35	14.61						
	Switch-As-Is Conversion rate per UNE Loop, Single LSR, (per DS0)			UDL, NTCUD	URESL		21.91	3.15								
	Switch-As-Is Conversion rate per UNE Loop, Spreadsheet, (per DS0)			UDL, NTCUD	URESP		23.32	4.56								
	CLEC to CLEC Conversion Charge without outside dispatch			UDL, NTCUD	UREWO		102.34	49.85								
2-WIRE Unbundled COPPER LOOP																
	2-Wire Unbundled Copper Loop-Designed including manual service inquiry & facility reservation - Zone 1		1	UCL	UCLPB	12.19	119.91	69.62	50.37	7.93						
	2-Wire Unbundled Copper Loop-Designed including manual service inquiry & facility reservation - Zone 2		2	UCL	UCLPB	13.71	119.91	69.62	50.37	7.93						
	2 Wire Unbundled Copper Loop-Designed including manual service inquiry & facility reservation - Zone 3		3	UCL	UCLPB	14.14	119.91	69.62	50.37	7.93						
	2-Wire Unbundled Copper Loop-Designed without manual service inquiry and facility reservation - Zone 1		1	UCL	UCLPW	12.19	94.87	56.89	50.37	7.93						
	2-Wire Unbundled Copper Loop-Designed without manual service inquiry and facility reservation - Zone 2		2	UCL	UCLPW	13.71	94.87	56.89	50.37	7.93						
	2-Wire Unbundled Copper Loop-Designed without manual service inquiry and facility reservation - Zone 3		3	UCL	UCLPW	14.14	94.87	56.89	50.37	7.93						
	CLEC to CLEC Conversion Charge without outside dispatch (UCL-Des)			UCL	UREWO		94.87	42.57								
4-WIRE COPPER LOOP																
	4-Wire Copper Loop-Designed including manual service inquiry and facility reservation - Zone 1		1	UCL	UCL4S	19.64	144.17	93.88	55.12	10.38						
	4-Wire Copper Loop-Designed including manual service inquiry and facility reservation - Zone 2		2	UCL	UCL4S	20.90	144.17	93.88	55.12	10.38						
	4-Wire Copper Loop-Designed including manual service inquiry and facility reservation - Zone 3		3	UCL	UCL4S	19.34	144.17	93.88	55.12	10.38						
	4-Wire Copper Loop-Designed without manual service inquiry and facility reservation - Zone 1		1	UCL	UCL4W	19.64	119.13	81.15	55.12	10.38						
	4-Wire Copper Loop-Designed without manual service inquiry and facility reservation - Zone 2		2	UCL	UCL4W	20.90	119.13	81.15	55.12	10.38						
	4-Wire Copper Loop-Designed without manual service inquiry and facility reservation - Zone 3		3	UCL	UCL4W	19.34	119.13	81.15	55.12	10.38						
	CLEC to CLEC Conversion Charge without outside dispatch (UCL-Des)			UCL	UREWO		94.87	42.57								
	Order Coordination for Unbundled Copper Loops (per loop)			UCL	UCLMC		8.17	8.17								
	Order Coordination for Specified Conversion Time (per LSR)			UEA, UDN, UAL, UHL, UDL, NTCVG, NTCUD, USL, NTCD1, UEANL	OCOSL		18.13									
LOOP MODIFICATION																
	Unbundled Loop Modification, Removal of Load Coils - 2 Wire pair less than or equal to 18k ft, per Unbundled Loop			UAL, UHL, UCL, UEQ, ULS, UEA, UEANL, UEPSR, UEPSB	ULM2L		32.46	32.46								
	Unbundled Loop Modification Removal of Load Coils - 4 Wire less than or equal to 18K ft, per Unbundled Loop			UHL, UCL, UEA	ULM4L		32.46	32.46								
	Unbundled Loop Modification Removal of Bridged Tap Removal, per unbundled loop			UAL, UHL, UCL, UEQ, ULS, UEA, UEANL, UEPSR, UEPSB	ULMBT		32.48	32.48								
SUB-LOOPS																
	Sub-Loop Distribution															

UNBUNDLED NETWORK ELEMENTS - South Carolina														Attachment: 2 Exh. A			
CATEGORY		RATE ELEMENTS	Interim	Zone	BCS	USOC	RATES($)					Svc Order Submitted Elec per LSR	Svc Order Submitted Manually per LSR	Incremental Charge - Manual Svc Order vs. Electronic-1st	Incremental Charge - Manual Svc Order vs. Electronic-Add'l	Incremental Charge - Manual Svc Order vs. Electronic-Disc 1st	Incremental Charge - Manual Svc Order vs. Electronic-Disc Add'l
							Rec	Nonrecurring		Nonrecurring Disconnect		OSS Rates($)					
								First	Add'l	First	Add'l	SOMEC	SOMAN	SOMAN	SOMAN	SOMAN	SOMAN
		Sub-Loop - Per Cross Box Location - CLEC Feeder Facility Set-Up			UEANL, UEF	USBSA		241.42	241.42								
		Sub-Loop - Per Cross Box Location - Per 25 Pair Panel Set-Up			UEANL, UEF	USBSB		22.69	22.69								
		Sub-Loop - Per Building Equipment Room - CLEC Feeder Facility Set-Up			UEANL	USBSC		177.84	177.84								
		Sub-Loop - Per Building Equipment Room - Per 25 Pair Panel Set-Up			UEANL	USBSD		55.58	55.58								
		Sub-Loop Distribution Per 2-Wire Analog Voice Grade Loop - Zone 1		1	UEANL	USBN2	8.87	65.94	31.03	45.35	6.71						
		Sub-Loop Distribution Per 2-Wire Analog Voice Grade Loop - Zone 2		2	UEANL	USBN2	12.58	65.94	31.03	45.35	6.71						
		Sub-Loop Distribution Per 2-Wire Analog Voice Grade Loop - Zone 3		3	UEANL	USBN2	14.79	65.94	31.03	45.35	6.71						
		Order Coordination for Unbundled Sub-Loops, per sub-loop pair			UEANL	USBMC		8.17	8.17								
		Sub-Loop Distribution Per 4-Wire Analog Voice Grade Loop - Zone 1		1	UEANL	USBN4	14.11	79.21	44.29	49.82	9.09						
		Sub-Loop Distribution Per 4-Wire Analog Voice Grade Loop - Zone 2		2	UEANL	USBN4	19.40	79.21	44.29	49.82	9.09						
		Sub-Loop Distribution Per 4-Wire Analog Voice Grade Loop - Zone 3		3	UEANL	USBN4	18.90	79.21	44.29	49.82	9.09						
		Order Coordination for Unbundled Sub-Loops, per sub-loop pair			UEANL	USBMC		8.17	8.17								
		Sub-Loop 2-Wire Intrabuilding Network Cable (INC)			UEANL	USBR2	2.41	53.13	18.21	45.35	6.71						
		Order Coordination for Unbundled Sub-Loops, per sub-loop pair			UEANL	USBMC		8.17	8.17								
		Sub-Loop 4-Wire Intrabuilding Network Cable (INC)			UEANL	USBR4	5.36	59.38	24.47	49.82	9.09						
		Order Coordination for Unbundled Sub-Loops, per sub-loop pair			UEANL	USBMC		8.17	8.17								
		Loop Testing - Basic 1st Half Hour			UEANL	URET1		34.23	0.00								
		Loop Testing - Basic Additional Half Hour			UEANL	URETA		19.90	19.90								
		2 Wire Copper Unbundled Sub-Loop Distribution - Zone 1		1	UEF	UCS2X	7.11	65.94	31.03	45.35	6.71						
		2 Wire Copper Unbundled Sub-Loop Distribution - Zone 2		2	UEF	UCS2X	9.83	65.94	31.03	45.35	6.71						
		2 Wire Copper Unbundled Sub-Loop Distribution - Zone 3		3	UEF	UCS2X	10.48	65.94	31.03	45.35	6.71						
		Order Coordination for Unbundled Sub-Loops, per sub-loop pair			UEF	USBMC		8.17	8.17								
		4 Wire Copper Unbundled Sub-Loop Distribution - Zone 1		1	UEF	UCS4X	7.85	79.21	44.29	49.82	9.09						
		4 Wire Copper Unbundled Sub-Loop Distribution - Zone 2		2	UEF	UCS4X	14.17	79.21	44.29	49.82	9.09						
		4 Wire Copper Unbundled Sub-Loop Distribution - Zone 3		3	UEF	UCS4X	12.64	79.21	44.29	49.82	9.09						
		Order Coordination for Unbundled Sub-Loops, per sub-loop pair			UEF	USBMC		8.17	8.17								
		Loop Tagging Service Level 1, Unbundled Copper Loop, Non-Designed and Distribution Subloops			UEF, UEANL	URETL		8.95	0.88								
		Loop Testing - Basic 1st Half Hour			UEF	URET1		34.23	0.00								
		Loop Testing - Basic Additional Half Hour			UEF	URETA		19.90	19.90								
	Unbundled Sub-Loop Modification																
		Unbundled Sub-Loop Modification - 2-W Copper Dist Load Coil/Equip Removal per 2-W PR			UEF	ULM2X		176.17	5.11								
		Unbundled Sub-loop Modification - 4-W Copper Dist Load Coil/Equip Removal per 4-W PR			UEF	ULM4X		176.17	5.11								
		Unbundled Loop Modification, Removal of Bridge Tap, per unbundled loop			UEF	ULMBT		278.82	6.13								
	Unbundled Network Terminating Wire (UNTW)																
		Unbundled Network Terminating Wire (UNTW) per Pair			UENTW	UENPP	0.3303	30.20	30.20								
	Network Interface Device (NID)																
		Network Interface Device (NID) - 1-2 lines			UENTW	UND12		43.68	28.79								
		Network Interface Device (NID) - 1-6 lines			UENTW	UND16		64.42	49.53								
		Network Interface Device Cross Connect - 2 W			UENTW	UNDC2		5.92	5.92								

UNBUNDLED NETWORK ELEMENTS - South Carolina														Attachment: 2 Exh. A			
CATEGORY		RATE ELEMENTS	Interim	Zone	BCS	USOC	RATES($)					Svc Order Submitted Elec per LSR	Svc Order Submitted Manually per LSR	Incremental Charge - Manual Svc Order vs. Electronic-1st	Incremental Charge - Manual Svc Order vs. Electronic-Add'l	Incremental Charge - Manual Svc Order vs. Electronic-Disc 1st	Incremental Charge - Manual Svc Order vs. Electronic-Disc Add'l
							Rec	Nonrecurring		Nonrecurring Disconnect		OSS Rates($)					
								First	Add'l	First	Add'l	SOMEC	SOMAN	SOMAN	SOMAN	SOMAN	SOMAN
		Network Interface Device Cross Connect - 4W			UENTW	UNDC4		5.92	5.92								
UNE OTHER, PROVISIONING ONLY - NO RATE																	
		Unbundled Contact Name, Provisioning Only - no rate			UAL, UCL, UDC, UDL, UDN, UEA, UHL, UEANL, UEF, UEQ, UENTW, NTCVG, NTCUD, NTCD1, USL	UNECN	0.00	0.00									
		Unbundled DS1 Loop - Superframe Format Option - no rate			USL	CCOSF	0.00	0.00									
		Unbundled DS1 Loop - Expanded Superframe Format option - no rate			USL	CCOEF	0.00	0.00									
		NID - Dispatch and Service Order for NID installation			UENTW	UNDBX	0.00	0.00									
		UNTW Circuit Establishment, Provisioning Only - No Rate			UENTW	UENCE	0.00	0.00									
HIGH CAPACITY UNBUNDLED LOCAL LOOP																	
	NOTE: minimum billing period of three months for DS3/STS-1 Local Loop																
		High Capacity Unbundled Local Loop - DS3 - Per Mile per month			UE3	1L5ND	12.26										
		High Capacity Unbundled Local Loop - DS3 - Facility Termination per month			UE3	UE3PX	306.36	452.52	264.53	119.75	83.77						
		High Capacity Unbundled Local Loop - STS-1 - Per Mile per month			UDLSX	1L5ND	12.26										
		High Capacity Unbundled Local Loop - STS-1 - Facility Termination per month			UDLSX	UDLS1	313.49	452.52	264.53	119.75	83.77						
LOOP MAKE-UP																	
		Loop Makeup - Preordering Without Reservation, per working or spare facility queried (Manual).			UMK	UMKLW		24.04	24.04								
		Loop Makeup - Preordering With Reservation, per spare facility queried (Manual).			UMK	UMKLP		25.49	25.49								
		Loop Makeup--With or Without Reservation, per working or spare facility queried (Mechanized)			UMK	UMKMQ		0.34	0.34								
LINE SPLITTING																	
	END USER ORDERING-CENTRAL OFFICE BASED																
		Line Splitting - per line activation DLEC owned splitter			UEPSR UEPSB	UREOS	0.61										
		Line Splitting - per line activation BST owned - physical			UEPSR UEPSB	UREBP	0.61	37.09	21.24	20.07	9.85						
		Line Splitting - per line activation BST owned - virtual			UEPSR UEPSB	UREBV	0.61	37.09	21.24	20.07	9.85						
	UNBUNDLED EXCHANGE ACCESS LOOP																
	2-WIRE ANALOG VOICE GRADE LOOP																
		2 Wire Analog Voice Grade Loop-Service Level 1-Line Splitting-Zone 1		1	UEPSR UEPSB	UEALS	14.94	37.92	17.62	23.56	5.32						
		2 Wire Analog Voice Grade Loop-Service Level 1-Line Splitting-Zone 1		1	UEPSR UEPSB	UEABS	14.94	37.92	17.62	23.56	5.32						
		2 Wire Analog Voice Grade Loop- Service Level 1-Line Splitting-Zone 2		2	UEPSR UEPSB	UEALS	21.39	37.92	17.62	23.56	5.32						
		2 Wire Analog Voice Grade Loop- Service Level 1-Line Splitting-Zone 2		2	UEPSR UEPSB	UEABS	21.39	37.92	17.62	23.56	5.32						
		2 Wire Analog Voice Grade Loop-Service Level 1-Line Splitting-Zone 3		3	UEPSR UEPSB	UEALS	26.72	37.92	17.62	23.56	5.32						
		2 Wire Analog Voice Grade Loop-Service Level 1-Line Splitting-Zone 3		3	UEPSR UEPSB	UEABS	26.72	37.92	17.62	23.56	5.32						
	PHYSICAL COLLOCATION																
		Physical Collocation-2 Wire Cross Connects (Loop) for Line Splitting			UEPSR UEPSB	PE1LS	0.0341	12.32	11.83	6.04	5.45						
	VIRTUAL COLLOCATION																
		Virtual Collocation-2 Wire Cross Connects (Loop) for Line Splitting			UEPSR UEPSB	VE1LS	0.0317	12.32	11.83	6.04	5.45						
UNBUNDLED DEDICATED TRANSPORT																	
	INTEROFFICE CHANNEL - DEDICATED TRANSPORT																
		Interoffice Channel - Dedicated Transport - 2-Wire Voice Grade - Per Mile per month			U1TVX	1L5XX	0.0167										

CATEGORY	RATE ELEMENTS	Interim	Zone	BCS	USOC	RATES($)					Svc Order Submitted Elec per LSR	Svc Order Submitted Manually per LSR	Incremental Charge - Manual Svc Order vs. Electronic-1st	Incremental Charge - Manual Svc Order vs. Electronic-Add'l	Incremental Charge - Manual Svc Order vs. Electronic-Disc 1st	Incremental Charge - Manual Svc Order vs. Electronic-Disc Add'l
						Rec	Nonrecurring		Nonrecurring Disconnect		OSS Rates($)					
							First	Add'l	First	Add'l	SOMEC	SOMAN	SOMAN	SOMAN	SOMAN	SOMAN
	Interoffice Channel - Dedicated Transport- 2- Wire Voice Grade - Facility Termination			U1TVX	U1TV2	24.30	40.63	27.47	16.77	6.91						
	Interoffice Channel - Dedicated Transpor t- 2-Wire Voice Grade Rev Bat. - Per Mile per month			U1TVX	1L5XX	0.0167										
	Interoffice Channel - Dedicated Transport- 2- Wire VG Rev Bat. - Facility Termination			U1TVX	U1TR2	24.30	40.63	27.47	16.77	6.91						
	Interoffice Channel - Dedicated Transport - 4-Wire Voice Grade - Per Mile per month			U1TVX	1L5XX	0.0167										
	Interoffice Channel - Dedicated Transport - 4- Wire Voice Grade - Facility Termination			U1TVX	U1TV4	21.29	40.63	27.47	16.77	6.91						
	Interoffice Channel - Dedicated Transport - 56 kbps - per mile per month			U1TDX	1L5XX	0.0167										
	Interoffice Channel - Dedicated Transport - 56 kbps - Facility Termination			U1TDX	U1TD5	16.76	40.63	27.47	16.77	6.91						
	Interoffice Channel - Dedicated Transport - 64 kbps - per mile per month			U1TDX	1L5XX	0.0167										
	Interoffice Channel - Dedicated Transport - 64 kbps - Facility Termination			U1TDX	U1TD6	16.76	40.63	27.47	16.77	6.91						
	Wholesale to UNE Switch-As-Is Charge			U1TDX	UNCCC		5.61	5.61	7.00	7.00						
	Interoffice Channel - Dedicated Channel - DS1 - Per Mile per month			U1TD1	1L5XX	0.3415										
	Interoffice Channel - Dedicated Tranport - DS1 - Facility Termination			U1TD1	U1TF1	77.14	89.47	81.99	16.39	14.48						
	Wholesale to UNE Switch-As-Is Charge			U1TD1	UNCCC		5.61	5.61	7.00	7.00						
	Interoffice Channel - Dedicated Transport - DS3 - Per Mile per month			U1TD3	1L5XX	8.02										
	Interoffice Channel - Dedicated Transport - DS3 - Facility Termination per month			U1TD3	U1TF3	880.65	279.37	163.12	60.33	58.59						
	Wholesale to UNE Switch-As-Is Charge			U1TD3	UNCCC		5.61	5.61	7.00	7.00						
	Interoffice Channel - Dedicated Transport - STS-1 - Per Mile per month			U1TS1	1L5XX	8.02										
	Interoffice Channel - Dedicated Transport - STS-1 - Facility Termination			U1TS1	U1TFS	880.55	279.37	163.12	60.33	58.59						
	Wholesale to UNE Switch-As-Is Charge			U1TS1	UNCCC		5.61	5.61	7.00	7.00						
	Local Channel - Dedicated - 2-Wire Voice Grade			ULDVX	ULDV2	17.63										
	Local Channel - Dedicated - 2-Wire Voice Grade Rev Bat			ULDVX	ULDR2	17.63										
	Local Channel - Dedicated - 4-Wire Voice Grade			ULDVX, UNCVX	ULDV4	19.02										
	Local Channel - Dedicated - DS1 - Zone 1		1	ULDD1, UNC1X	ULDF1	49.01										
	Local Channel - Dedicated - DS1 - Zone 2		2	ULDD1, UNC1X	ULDF1	80.87										
	Local Channel - Dedicated - DS1 - Zone 3		3	ULDD1, UNC1X	ULDF1	219.28										
	Local Channel - Dedicated - DS3 - Per Mile per month			ULDD3, UNC3X	1L5NC	13.72										
	Local Channel - Dedicated - DS3 - Facility Termination			ULDD3, UNC3X	ULDF3	512.90										
	Local Channel - Dedicated - STS-1- Per Mile per month			ULDS1, UNCSX	1L5NC	13.72										
	Local Channel - Dedicated - STS-1 - Facility Termination			ULDS1, UNCSX	ULDFS	500.37										
	UNBUNDLED DARK FIBER															
	Dark Fiber, Per Four Fiber Strands, Per Route Mile Or Fraction Thereof - Interoffice Transport			UDF, UDFCX	1L5DF	36.41	640.51	138.17	317.76	198.11						
911 PBX LOCATE																
	911 PBX LOCATE DATABASE CAPABILITY															
	Service Establishment per CLEC per End User Account			9PBDC	9PBEU		1,813.00									
	Changes to TN Range or Customer Profile			9PBDC	9PBTN		181.40									
	Per Telephone Number (Monthly)			9PBDC	9PBMM	0.07										
	Change Company (Service Provider) ID			9PBDC	9PBPC		532.48									
	PBX Locate Service Support per CLEC (Monthlt)			9PBDC	9PBMR	181.29										
	Service Order Charge			9PBDC	9PBSC		15.69									
	911 PBX LOCATE TRANSPORT COMPONENT															
	See Att 3															
ENHANCED EXTENDED LINK (EELs)																
	NOTE: The monthly recurring and non-recurring charges below will apply and the Switch-As-Is Charge will not apply for UNE combinations provisioned as ' Ordinarily Combined' Network Elements.															

UNBUNDLED NETWORK ELEMENTS - South Carolina

Attachment: 2 Exh. A

CATEGORY	RATE ELEMENTS	Interim	Zone	BCS	USOC	RATES($)					Svc Order Submitted Elec per LSR	Svc Order Submitted Manually per LSR	Incremental Charge - Manual Svc Order vs. Electronic-1st	Incremental Charge - Manual Svc Order vs. Electronic-Add'l	Incremental Charge - Manual Svc Order vs. Electronic-Disc 1st	Incremental Charge - Manual Svc Order vs. Electronic-Disc Add'l
						Rec	Nonrecurring		Nonrecurring Disconnect		OSS Rates($)					
							First	Add'l	First	Add'l	SOMEC	SOMAN	SOMAN	SOMAN	SOMAN	SOMAN
	NOTE: The monthly recurring and the Switch-As-Is Charge and not the non-recurring charges below will apply for UNE combinations provisioned as ' Currently Combined' Network Elements.															
	EXTENTED 2-WIRE VOICE GRADE EXTENDED LOOP WITH DEDICATED DS1 INTEROFFICE TRANSPORT															
	First 2-Wire VG Loop (SL2) in Combination - Zone 1		1	UNCVX	UEAL2	16.68	105.98	68.43	53.05	10.61						
	First 2-Wire VG Loop (SL2) in Combination - Zone 2		2	UNCVX	UEAL2	23.13	105.98	68.43	53.05	10.61						
	First 2-Wire VG Loop (SL2) in Combination - Zone 3		3	UNCVX	UEAL2	28.46	105.98	68.43	53.05	10.61						
	Interoffice Transport - Dedicated - DS1 combination - Per Mile per month			UNC1X	1L5XX	0.27										
	Interoffice Transport - Dedicated - DS1 combination - Facility Termination per month			UNC1X	U1TF1	61.71	89.47	81.99	16.39	14.48						
	1/0 Channelization System in combination Per Month			UNC1X	MQ1	107.57	91.24	62.71	10.56	9.81						
	Voice Grade COCI - Per Month			UNCVX	1D1VG	0.56	6.59	4.73	0.00	0.00						
	Each Additional 2-Wire VG Loop (SL 2) in Combination - Zone 1		1	UNCVX	UEAL2	16.68	105.98	68.43	53.05	10.61						
	Each Additional 2-Wire VG Loop (SL 2) in Combination - Zone 2		2	UNCVX	UEAL2	23.13	105.98	68.43	53.05	10.61						
	Each Additional 2-Wire VG Loop (SL 2) in Combination - Zone 3		3	UNCVX	UEAL2	28.46	105.98	68.43	53.05	10.61						
	Voice Grade COCI - Per Month			UNCVX	1D1VG	0.56	6.59	4.73	0.00	0.00						
	Wholesale to UNE, Switch-As-Is Charge			UNC1X	UNCCC		5.61	5.61	7.00	7.00						
	EXTENDED 4-WIRE VOICE GRADE EXTENDED LOOP WITH DEDICATED DS1 INTEROFFICE TRANSPORT															
	First 4-Wire Analog Voice Grade Loop in Combination - Zone 1		1	UNCVX	UEAL4	32.59	132.38	94.83	59.35	14.61						
	First 4-Wire Analog Voice Grade Loop in Combination - Zone 2		2	UNCVX	UEAL4	43.89	132.38	94.83	59.35	14.61						
	First 4-Wire Analog Voice Grade Loop in Combination - Zone 3		3	UNCVX	UEAL4	43.38	132.38	94.83	59.35	14.61						
	Interoffice Transport - Dedicated - DS1 combination - Per Mile Per Month			UNC1X	1L5XX	0.27										
	Interoffice Transport - Dedicated - DS1 - Facility Termination Per Month			UNC1X	U1TF1	61.71	89.47	81.99	16.39	14.48						
	1/0 Channel System in combination Per Month			UNC1X	MQ1	107.57	91.24	62.71	10.56	9.81						
	Voice Grade COCI in combination - per month			UNCVX	1D1VG	0.56	6.59	4.73	0.00	0.00						
	Additional 4-Wire Analog Voice Grade Loop in same DS1 Interoffice Transport Combination - Zone 1		1	UNCVX	UEAL4	32.59	132.38	94.83	59.35	14.61						
	Additional 4-Wire Analog Voice Grade Loop in same DS1 Interoffice Transport Combination - Zone 2		2	UNCVX	UEAL4	43.89	132.38	94.83	59.35	14.61						
	Additional 4-Wire Analog Voice Grade Loop in same DS1 Interoffice Transport Combination - Zone 3		3	UNCVX	UEAL4	43.38	132.38	94.83	59.35	14.61						
	Additional Voice Grade COCI in combination - per month			UNCVX	1D1VG	0.56	6.59	4.73	0.00	0.00						
	Wholesale to UNE, Switch-As-Is Charge			UNC1X	UNCCC		5.61	5.61	7.00	7.00						
	EXTENDED 4-WIRE 56 KBPS EXTENDED DIGITAL LOOP WITH DEDICATED DS1 INTEROFFICE TRANSPORT															
	First 4-Wire 56Kbps Digital Grade Loop in Combination - Zone 1		1	UNCDX	UDL56	29.93	126.66	89.12	59.35	14.61						
	First 4-Wire 56Kbps Digital Grade Loop in Combination - Zone 2		2	UNCDX	UDL56	33.99	126.66	89.12	59.35	14.61						
	First 4-Wire 56Kbps Digital Grade Loop in Combination - Zone 3		3	UNCDX	UDL56	34.74	126.66	89.12	59.35	14.61						
	Interoffice Transport - Dedicated - DS1 combination - Per Mile Per Month			UNC1X	1L5XX	0.27										
	Interoffice Transport - Dedicated - DS1 - combination Facility Termination Per Month			UNC1X	U1TF1	61.71	89.47	81.99	16.39	14.48						
	1/0 Channel System in combination Per Month			UNC1X	MQ1	107.57	91.24	62.71	10.56	9.81						
	OCU-DP COCI (data) per month (2.4-64kbs)			UNCDX	1D1DD	1.19	6.59	4.73	0.00	0.00						
	Additional 4-Wire 56Kbps Digital Grade Loop in same DS1 Interoffice Transport Combination - Zone 1		1	UNCDX	UDL56	29.93	126.66	89.12	59.35	14.61						
	Additional 4-Wire 56Kbps Digital Grade Loop in same DS1 Interoffice Transport Combination - Zone 2		2	UNCDX	UDL56	33.99	126.66	89.12	59.35	14.61						
	Additional 4-Wire 56Kbps Digital Grade Loop in same DS1 Interoffice Transport Combination - Zone 3		3	UNCDX	UDL56	34.74	126.66	89.12	59.35	14.61						

CATEGORY	RATE ELEMENTS	Interim	Zone	BCS	USOC	RATES($)					Svc Order Submitted Elec per LSR	Svc Order Submitted Manually per LSR	Incremental Charge - Manual Svc Order vs. Electronic-1st	Incremental Charge - Manual Svc Order vs. Electronic-Add'l	Incremental Charge - Manual Svc Order vs. Electronic-Disc 1st	Incremental Charge - Manual Svc Order vs. Electronic-Disc Add'l
						Rec	Nonrecurring		Nonrecurring Disconnect		OSS Rates($)					
							First	Add'l	First	Add'l	SOMEC	SOMAN	SOMAN	SOMAN	SOMAN	SOMAN
	Additional OCU-DP COCI (data) - in combination per month (2.4-64kbs)			UNCDX	1D1DD	1.19	6.59	4.73	0.00	0.00						
	Wholesale to UNE, Switch-As-Is Charge			UNC1X	UNCCC		5.61	5.61	7.00	7.00						
	EXTENDED 4-WIRE 64 KBPS EXTENDED DIGITAL LOOP WITH DEDICATED DS1 INTEROFFICE TRANSPORT															
	First 4-Wire 64Kbps Digital Grade Loop in Combination - Zone 1		1	UNCDX	UDL64	29.93	126.66	89.12	59.35	14.61						
	First 4-Wire 64Kbps Digital Grade Loop in Combination - Zone 2		2	UNCDX	UDL64	33.99	126.66	89.12	59.35	14.61						
	First 4-Wire 64Kbps Digital Grade Loop in Combination - Zone 3		3	UNCDX	UDL64	34.74	126.66	89.12	59.35	14.61						
	Interoffice Transport - Dedicated - DS1 combination - Per Mile Per Month			UNC1X	1L5XX	0.27										
	interoffice Transport - Dedicated - DS1 combination - Facility Termination Per Month			UNC1X	U1TF1	61.71	89.47	81.99	16.39	14.48						
	1/0 Channel System in combination Per Month			UNC1X	MQ1	107.57	91.24	62.71	10.56	9.81						
	OCU-DP COCI (data) - in combination - per month (2.4-64kbs)			UNCDX	1D1DD	1.19	6.59	4.73	0.00	0.00						
	Additional 4-Wire 64Kbps Digital Grade Loop in same DS1 Interoffice Transport Combination - Zone 1		1	UNCDX	UDL64	29.93	126.66	89.12	59.35	14.61						
	Additional 4-Wire 64Kbps Digital Grade Loop in same DS1 Interoffice Transport Combination - Zone 2		2	UNCDX	UDL64	33.99	126.66	89.12	59.35	14.61						
	Additional 4-Wire 64Kbps Digital Grade Loop in same DS1 Interoffice Transport Combination - Zone 3		3	UNCDX	UDL64	34.74	126.66	89.12	59.35	14.61						
	Additional OCU-DP COCI (data) - in combination - per month (2.4-64kbs)			UNCDX	1D1DD	1.19	6.59	4.73	0.00	0.00						
	Wholesale to UNE, Switch-As-Is Charge			UNC1X	UNCCC		5.61	5.61	7.00	7.00						
	EXTENDED 4-WIRE DS1 DIGITAL EXTENDED LOOP WITH DEDICATED DS1 INTEROFFICE TRANSPORT															
	4-Wire DS1 Digital Loop in Combination - Zone 1		1	UNC1X	USLXX	90.87	253.03	157.89	44.80	11.73						
	4-Wire DS1 Digital Loop in Combination - Zone 2		2	UNC1X	USLXX	155.43	253.03	157.89	44.80	11.73						
	4-Wire DS1 Digital Loop in Combination - Zone 3		3	UNC1X	USLXX	261.89	253.03	157.89	44.80	11.73						
	Interoffice Transport - Dedicated - DS1 combination - Per Mile Per Month			UNC1X	1L5XX	0.27										
	Interoffice Transport - Dedicated - DS1 combination - Facility Termination Per Month			UNC1X	U1TF1	61.71	89.47	81.99	16.39	14.48						
	Wholesale to UNE, Switch-As-Is Charge			UNC1X	UNCCC		5.61	5.61	7.00	7.00						
	EXTENDED 4-WIRE DS1 DIGITAL EXTENDED LOOP WITH DEDICATED DS3 INTEROFFICE TRANSPORT															
	First DS1Loop in Combination - Zone 1		1	UNC1X	USLXX	90.87	253.03	157.89	44.80	11.73						
	First DS1Loop in Combination - Zone 2		2	UNC1X	USLXX	155.43	253.03	157.89	44.80	11.73						
	First DS1Loop in Combination - Zone 3		3	UNC1X	USLXX	261.89	253.03	157.89	44.80	11.73						
	Interoffice Transport - Dedicated - DS3 combination - Per Mile Per Month			UNC3X	1L5XX	6.42										
	Interoffice Transport - Dedicated - DS3 - Facility Termination per month			UNC3X	U1TF3	704.52	279.37	163.12	60.33	58.59						
	3/1Channel System in combination per month			UNC3X	MQ3	144.02	178.54	94.18	33.33	31.90						
	DS1 COCI in combination per month			UNC1X	UC1D1	8.64	6.59	4.73	0.00	0.00						
	Additional DS1Loop in DS3 Interoffice Transport Combination - Zone 1		1	UNC1X	USLXX	90.87	253.03	157.89	44.80	11.73						
	Additional DS1Loop in DS3 Interoffice Transport Combination - Zone 2		2	UNC1X	USLXX	155.43	253.03	157.89	44.80	11.73						
	Additional DS1Loop in DS3 Interoffice Transport Combination - Zone 3		3	UNC1X	USLXX	261.89	253.03	157.89	44.80	11.73						
	Additoinal DS1 COCI in combination per month			UNC1X	UC1D1	8.64	6.59	4.73	0.00	0.00						
	Wholesale to UNE, Switch-As-Is Charge			UNC3X	UNCCC		5.61	5.61	7.00	7.00						
	EXTENDED 2-WIRE VOICE GRADE EXTENDED LOOP/ 2-WIRE VOICE GRADE INTEROFFICE TRANSPORT															
	2-WireVG Loop in combination - Zone 1		1	UNCVX	UEAL2	16.68	105.98	68.43	53.05	10.61						
	2-WireVG Loop in combination - Zone 2		2	UNCVX	UEAL2	23.13	105.98	68.43	53.05	10.61						
	2-WireVG Loop in combination - Zone 3		3	UNCVX	UEAL2	28.46	105.98	68.43	53.05	10.61						
	Interoffice Transport - 2-wire VG - Dedicated- Per Mile Per Month			UNCVX	1L5XX	0.0134										

CATEGORY	RATE ELEMENTS	Interim	Zone	BCS	USOC	RATES($)					Svc Order Submitted Elec per LSR	Svc Order Submitted Manually per LSR	Incremental Charge - Manual Svc Order vs. Electronic-1st	Incremental Charge - Manual Svc Order vs. Electronic-Add'l	Incremental Charge - Manual Svc Order vs. Electronic-Disc 1st	Incremental Charge - Manual Svc Order vs. Electronic-Disc Add'l
						Rec	Nonrecurring		Nonrecurring Disconnect		OSS Rates($)					
							First	Add'l	First	Add'l	SOMEC	SOMAN	SOMAN	SOMAN	SOMAN	SOMAN
	Interoffice Transport - 2-wire VG - Dedicated - Facility Termination per month			UNCVX	U1TV2	19.44	40.63	27.47	16.77	6.91						
	Wholesale to UNE, Switch-As-Is Charge			UNCVX	UNCCC		5.61	5.61	7.00	7.00						
	EXTENDED 4-WIRE VOICE GRADE EXTENDED LOOP/ 4 WIRE VOICE GRADE INTEROFFICE TRANSPORT															
	4-WireVG Loop in combination - Zone 1		1	UNCVX	UEAL4	32.59	132.38	94.83	59.35	14.61						
	4-WireVG Loop in combination - Zone 2		2	UNCVX	UEAL4	43.89	132.38	94.83	59.35	14.61						
	4-WireVG Loop in combination - Zone 3		3	UNCVX	UEAL4	43.38	132.38	94.83	59.35	14.61						
	Interoffice Transport - 4-wire VG - Dedicated - Per Mile Per Month			UNCVX	1L5XX	0.0134										
	Interoffice Transport - 4-wire VG - Dedicated - Facility Termination per month			UNCVX	U1TV4	17.03	40.63	27.47	16.77	6.91						
	Wholesale to UNE, Switch-As-Is Charge			UNCVX	UNCCC		5.61	5.61	7.00	7.00						
	EXTENDED DS3 DIGITAL EXTENDED LOOP WITH DEDICATED DS3 INTEROFFICE TRANSPORT															
	DS3 Local Loop in combination - per mile per month			UNC3X	1L5ND	12.26										
	DS3 Local Loop in combination - Facility Termination per month			UNC3X	UE3PX	306.36	452.52	264.53	119.75	83.77						
	Interoffice Transport - Dedicated - DS3 - Per Mile per month			UNC3X	1L5XX	6.42										
	Interoffice Transport - Dedicated - DS3 combination - Facility Termination per month			UNC3X	U1TF3	704.52	279.37	163.12	60.33	58.59						
	Wholesale to UNE, Switch-As-Is Charge			UNC3X	UNCCC		5.61	5.61	7.00	7.00						
	EXTENDED STS-1 DIGITAL EXTENDED LOOP WITH DEDICATED STS-1 INTEROFFICE TRANSPORT															
	STS-1 Local Lolp in combination - per mile per month			UNCSX	1L5ND	12.26										
	STS-1 Local Loop in combination - Facility Termination per month			UNCSX	UDLS1	313.49	452.52	264.53	119.75	83.77						
	Interoffice Transport - Dedicated - STS-1 combination - per mile per month			UNCSX	1L5XX	6.42										
	Interoffice Transport - Dedicated - STS-1 combination - Facility Termination per month			UNCSX	U1TFS	704.44	279.37	163.12	60.33	58.59						
	Wholesale to UNE, Switch-As-Is Charge			UNCSX	UNCCC		5.61	5.61	7.00	7.00						
	EXTENDED 2-WIRE ISDN EXTENDED LOOP WITH DS1 INTEROFFICE TRANSPORT															
	First 2-Wire ISDN Loop in Combination - Zone 1		1	UNCNX	U1L2X	25.21	117.58	80.03	53.05	10.61						
	First 2-Wire ISDN Loop in Combination - Zone 2		2	UNCNX	U1L2X	32.76	117.58	80.03	53.05	10.61						
	First 2-Wire ISDN Loop in Combination - Zone 3		3	UNCNX	U1L2X	37.70	117.58	80.03	53.05	10.61						
	Interoffice Transport - Dedicated - DS1 combination - per mile per month			UNC1X	1L5XX	0.27										
	Interoffice Transport - Dedicated - DS1 combination - Facility Termination per month			UNC1X	U1TF1	61.71	89.47	81.99	16.39	14.48						
	1/0 Channel System in combination - per month			UNC1X	MQ1	107.57	91.24	62.71	10.56	9.81						
	2-wire ISDN COCI (BRITE) - in combination - per month			UNCNX	UC1CA	2.56	6.59	4.73	0.00	0.00						
	Additional 2-wire ISDN Loop in same DS1Interoffice Transport Combination - Zone 1		1	UNCNX	U1L2X	25.21	117.58	80.03	53.05	10.61						
	Additional 2-wire ISDN Loop in same DS1Interoffice Transport Combination - Zone 2		2	UNCNX	U1L2X	32.76	117.58	80.03	53.05	10.61						
	Additional 2-wire ISDN Loop in same DS1Interoffice Transport Combination - Zone 3		3	UNCNX	U1L2X	37.70	117.58	80.03	53.05	10.61						
	Additional 2-wire ISDN COCI (BRITE) - in combination- per month			UNCNX	UC1CA	2.56	6.59	4.73	0.00	0.00						
	Wholesale to UNE, Switch-As-Is Charge			UNC1X	UNCCC		5.61	5.61	7.00	7.00						
	EXTENDED 4-WIRE DS1 DIGITAL EXTENDED LOOP WITH DEDICATED STS-1 INTEROFFICE TRANSPORT															
	First DS1 Loop Combination - Zone 1		1	UNC1X	USLXX	90.87	253.03	157.89	44.80	11.73						
	First DS1 Loop Combination - Zone 2		2	UNC1X	USLXX	155.43	253.03	157.89	44.80	11.73						
	First DS1 Loop Combination - Zone 3		3	UNC1X	USLXX	261.89	253.03	157.89	44.80	11.73						
	Interoffice Transport - Dedicated - STS-1 combination - Per Mile Per Month			UNCSX	1L5XX	6.42										
	Interoffice Transport - Dedicated - STS-1 combination - Facility Termination per month			UNCSX	U1TFS	704.44	279.37	163.12	60.33	58.59						
	3/1 Channel System in combination per month			UNCSX	MQ3	144.02	178.54	94.18	33.33	31.90						
	DS1 COCI in combination per month			UNC1X	UC1D1	8.64	6.59	4.73	0.00	0.00						

CATEGORY	RATE ELEMENTS	Interim	Zone	BCS	USOC	RATES($)					Svc Order Submitted Elec per LSR	Svc Order Submitted Manually per LSR	Incremental Charge - Manual Svc Order vs. Electronic-1st	Incremental Charge - Manual Svc Order vs. Electronic-Add'l	Incremental Charge - Manual Svc Order vs. Electronic-Disc 1st	Incremental Charge - Manual Svc Order vs. Electronic-Disc Add'l
						Rec	Nonrecurring		Nonrecurring Disconnect		OSS Rates($)					
							First	Add'l	First	Add'l	SOMEC	SOMAN	SOMAN	SOMAN	SOMAN	SOMAN
	Additional DS1Loop in the same STS-1 Interoffice Transport Combination - Zone 1		1	UNC1X	USLXX	90.87	253.03	157.89	44.80	11.73						
	Additional DS1Loop in the same STS-1 Interoffice Transport Combination - Zone 2		2	UNC1X	USLXX	155.43	253.03	157.89	44.80	11.73						
	Additional DS1Loop in the same STS-1 Interoffice Transport Combination - Zone 3		3	UNC1X	USLXX	261.89	253.03	157.89	44.80	11.73						
	DS1 COCI in combination per month			UNC1X	UC1D1	8.64	6.59	4.73	0.00	0.00						
	Wholesale to UNE, Switch-As-Is Charge			UNCSX	UNCCC		5.61	5.61	7.00	7.00						
	EXTENDED 4-WIRE 56 KBPS DIGITAL EXTENDED LOOP WITH 56 KBPS INTEROFFICE TRANSPORT															
	4-wire 56 kbps Local Loop in combination - Zone 1		1	UNCDX	UDL56	29.93	126.66	89.12	59.35	14.61						
	4-wire 56 kbps Local Loop in combination - Zone 2		2	UNCDX	UDL56	33.99	126.66	89.12	59.35	14.61						
	4-wire 56 kbps Local Loop in combination - Zone 3		3	UNCDX	UDL56	34.74	126.66	89.12	59.35	14.61						
	Interoffice Transport - Dedicated - 4-wire 56 kbps combination - Per Mile per month			UNCDX	1L5XX	0.0134										
	Interoffice Transport - Dedicated - 4-wire 56 kbps combination - Facility Termination per month			UNCDX	U1TD5	13.41	40.63	27.47	16.77	6.91						
	Wholesale to UNE, Switch-As-Is Charge			UNCDX	UNCCC		5.61	5.61	7.00	7.00						
	EXTENDED 4-WIRE 64 KBPS DIGITAL EXTENDED LOOP WITH 64 KBPS INTEROFFICE TRANSPORT															
	4-wire 64 kbps Lcoal Loop in Combination - Zone 1		1	UNCDX	UDL64	29.93	126.66	89.12	59.35	14.61						
	4-wire 64 kbps Lcoal Loop in Combination - Zone 2		2	UNCDX	UDL64	33.99	126.66	89.12	59.35	14.61						
	4-wire 64 kbps Lcoal Loop in Combination - Zone 3		3	UNCDX	UDL64	34.74	126.66	89.12	59.35	14.61						
	Interoffice Transport - Dedicated - 4-wire 64 kbps combination - Per Mile per month			UNCDX	1L5XX	0.0134										
	Interoffice Transport - Dedicated - 4-wire 64 kbps combination - Facility Termination per month			UNCDX	U1TD6	13.41	40.63	27.47	16.77	6.91						
	Wholesale to UNE, Switch-As-Is Charge			UNCDX	UNCCC		5.61	5.61	7.00	7.00						
	EXTENDED 2-WIRE VOICE GRADE LOOP WITH DS1 INTEROFFICE TRANSPORT w/ 3/1 MUX															
	First 2-wire VG Loop (SL2) in Combination - Zone 1		1	UNCVX	UEAL2	16.68	105.98	68.43	53.05	10.61						
	First 2-wire VG Loop (SL2) in Combination - Zone 2		2	UNCVX	UEAL2	23.13	105.98	68.43	53.05	10.61						
	First 2-wire VG Loop (SL2) in Combination - Zone 3		3	UNCVX	UEAL2	28.46	105.98	68.43	53.05	10.61						
	First Interoffice Transport - Dedicated - DS1 combination - Per Mile			UNC1X	1L5XX	0.27										
	First Interoffice Transport - Dedicated - DS1 combination - Facility Termination per month			UNC1X	U1TF1	61.71	89.47	81.99	16.39	14.48						
	Per each DS1 Channelization System Per Month			UNC1X	MQ1	107.57	91.24	62.71	10.56	9.81						
	Per each Voice Grade COCI - Per Month per month			UNCVX	1D1VG	0.56	6.59	4.73	0.00	0.00						
	3/1 Channel System in combination per month			UNC3X	MQ3	144.02	178.54	94.18	33.33	31.90						
	Per each DS1 COCI in combination per month			UNC1X	UC1D1	8.64	6.59	4.73	0.00	0.00						
	Each Additional 2-Wire VG Loop(SL 2) in the same DS1 Interoffice Transport Combination - Zone 1		1	UNCVX	UEAL2	16.68	105.98	68.43	53.05	10.61						
	Each Additional 2-Wire VG Loop(SL2) in the same DS1 Interoffice Transport Combination - Zone 2		2	UNCVX	UEAL2	23.13	105.98	68.43	53.05	10.61						
	Each Additional 2-Wire VG Loop(SL2) in the same DS1 Interoffice Transport Combination - Zone 3		3	UNCVX	UEAL2	28.46	105.98	68.43	53.05	10.61						
	Each Additional Voice Grade COCI in combination - per month			UNCVX	1D1VG	0.56	6.59	4.73	0.00	0.00						
	Each Additional DS1 Interoffice Channel per mile in same 3/1 Channel System per month			UNC1X	1L5XX	0.27										
	Each Additional DS1 Interoffice Channel Facility Termination in same 3/1 Channel System per month			UNC1X	U1TF1	61.71	89.47	81.99	16.39	14.48						
	Each Additional DS1 COCI combination per month			UNC1X	UC1D1	8.64	6.59	4.73	0.00	0.00						
	Wholesale to UNE, Switch-As-Is Charge			UNC1X	UNCCC		5.61	5.61	7.00	7.00						
	EXTENDED 4-WIRE 56 KBPS DIGITAL LOOP WITH DEDICATED DS1 INTEROFFICE TRANSPORT w/ 3/1 MUX															
	First 4-Wire Analog Voice Grade Local Loop in Combination - Zone 1		1	UNCVX	UEAL4	32.59	132.38	94.83	59.35	14.61						
	First 4-Wire Analog Voice Grade Local Loop in Combination - Zone 2		2	UNCVX	UEAL4	43.89	132.38	94.83	59.35	14.61						
	First 4-Wire Analog Voice Grade Local Loop in Combination - Zone 3		3	UNCVX	UEAL4	43.38	132.38	94.83	59.35	14.61						

CATEGORY	RATE ELEMENTS	Interim	Zone	BCS	USOC	RATES($) Rec	Nonrecurring First	Nonrecurring Add'l	Nonrecurring Disconnect First	Nonrecurring Disconnect Add'l	Svc Order Submitted Elec per LSR	Svc Order Submitted Manually per LSR	Incremental Charge - Manual Svc Order vs. Electronic-1st	Incremental Charge - Manual Svc Order vs. Electronic-Add'l	Incremental Charge - Manual Svc Order vs. Electronic-Disc 1st	Incremental Charge - Manual Svc Order vs. Electronic-Disc Add'l
											OSS Rates($)					
							First	Add'l	First	Add'l	SOMEC	SOMAN	SOMAN	SOMAN	SOMAN	SOMAN
	First Interoffice Transport - Dedicated - DS1 combination - Per Mile Per Month			UNC1X	1L5XX	0.27										
	First Interoffice Transport - Dedicated - DS1 - Facility Termination Per Month			UNC1X	U1TF1	61.71	89.47	81.99	16.39	14.48						
	Per each 1/0 Channel System in combination Per Month			UNC1X	MQ1	107.57	91.24	62.71	10.56	9.81						
	Per each Voice Grade COCI in combination - per month			UNCVX	1D1VG	0.56	6.59	4.73	0.00	0.00						
	3/1 Channel System in combination per month			UNC3X	MQ3	144.02	178.54	94.18	33.33	31.90						
	Per each DS1 COCI in combination per month			UNC1X	UC1D1	8.64	6.59	4.73	0.00	0.00						
	Additional 4-Wire Analog Voice Grade Loop in same DS1 Interoffice Transport Combination - Zone 1		1	UNCVX	UEAL4	32.59	132.38	94.83	59.35	14.61						
	Additional 4-Wire Analog Voice Grade Loop in same DS1 Interoffice Transport Combination - Zone 2		2	UNCVX	UEAL4	43.89	132.38	94.83	59.35	14.61						
	Additional 4-Wire Analog Voice Grade Loop in same DS1 Interoffice Transport Combination - Zone 3		3	UNCVX	UEAL4	43.38	132.38	94.83	59.35	14.61						
	Each Additional DS1 Interoffice Channel per mile in same 3/1 Channel System per month			UNC1X	1L5XX	0.27										
	Each Additional DS1 Interoffice Channel Facility Termination in same 3/1 Channel System per month			UNC1X	U1TF1	61.71	89.47	81.99	16.39	14.48						
	Additional Voice Grade COCI - in combination - per month			UNCVX	1D1VG	0.56	6.59	4.73	0.00	0.00						
	Wholesale to UNE, Switch-As-Is Charge			UNC1X	UNCCC		5.61	5.61	7.00	7.00						
	EXTENDED 4-WIRE 56 KBPS DIGITAL LOOP WITH DEDICATED DS1 INTEROFFICE TRANSPORT w/ 3/1 MUX															
	First 4-Wire 56Kbps Digital Grade Local Loop in Combination - Zone 1		1	UNCDX	UDL56	29.93	126.66	89.12	59.35	14.61						
	First 4-Wire 56Kbps Digital Grade Local Loop in Combination - Zone 2		2	UNCDX	UDL56	33.99	126.66	89.12	59.35	14.61						
	First 4-Wire 56Kbps Digital Grade Local Loop in Combination - Zone 3		3	UNCDX	UDL56	34.74	126.66	89.12	59.35	14.61						
	First Interoffice Transport - Dedicated - DS1 combination - Per Mile Per Month			UNC1X	1L5XX	0.27										
	First Interoffice Transport - Dedicated - DS1 - combination Facility Termination Per Month			UNC1X	U1TF1	61.71	89.47	81.99	16.39	14.48						
	Per each 1/0 Channel System in combination Per Month			UNC1X	MQ1	107.57	91.24	62.71	10.56	9.81						
	Per each OCU-DP COCI (data) COCI per month (2.4-64kbs)			UNCDX	1D1DD	1.19	6.59	4.73	0.00	0.00						
	3/1 Channel System in combination per month			UNC3X	MQ3	144.02	178.54	94.18	33.33	31.90						
	Per each DS1 COCI in combination per month			UNC1X	UC1D1	8.64	6.59	4.73	0.00	0.00						
	Additional 4-Wire 56Kbps Digital Grade Loop in same DS1 Interoffice Transport Combination - Zone 1		1	UNCDX	UDL56	29.93	126.66	89.12	59.35	14.61						
	Additional 4-Wire 56Kbps Digital Grade Loop in same DS1 Interoffice Transport Combination - Zone 2		2	UNCDX	UDL56	33.99	126.66	89.12	59.35	14.61						
	Additional 4-Wire 56Kbps Digital Grade Loop in same DS1 Interoffice Transport Combination - Zone 3		3	UNCDX	UDL56	34.74	126.66	89.12	59.35	14.61						
	OCU-DP COCI (data) COCI in combination per month (2.4-64kbs)			UNCDX	1D1DD	1.19	6.59	4.73	0.00	0.00						
	Each Additional DS1 Interoffice Channel per mile in same 3/1 Channel System per month			UNC1X	1L5XX	0.27										
	Each Additional DS1 Interoffice Channel Facility Termination in same 3/1 Channel System per month			UNC1X	U1TF1	61.71	89.47	81.99	16.39	14.48						
	Each Additional DS1 COCI in the same 3/1 channel system combination per month			UNC1X	UC1D1	8.64	6.59	4.73	0.00	0.00						
	Wholesale to UNE, Switch-As-Is Charge			UNC1X	UNCCC		5.61	5.61	7.00	7.00						
	EXTENDED 4-WIRE 64 KBPS DIGITAL LOOP WITH DEDICATED DS1 INTEROFFICE TRANSPORT w/ 3/1 MUX															
	First 4-Wire 64Kbps Digital Grade Loop in a DS1 Interoffice Transport Combination - Zone 1		1	UNCDX	UDL64	29.93	126.66	89.12	59.35	14.61						
	First 4-Wire 64Kbps Digital Grade Loop in a DS1 Interoffice Transport Combination - Zone 2		2	UNCDX	UDL64	33.99	126.66	89.12	59.35	14.61						
	First 4-Wire 64Kbps Digital Grade Loop in a DS1 Interoffice Transport Combination - Zone 3		3	UNCDX	UDL64	34.74	126.66	89.12	59.35	14.61						
	First Interoffice Transport - Dedicated - DS1 combination - Per Mile Per Month			UNC1X	1L5XX	0.27										

UNBUNDLED NETWORK ELEMENTS - South Carolina

Attachment: 2 Exh. A

CATEGORY	RATE ELEMENTS	Interim	Zone	BCS	USOC	RATES($)					Svc Order Submitted Elec per LSR	Svc Order Submitted Manually per LSR	Incremental Charge - Manual Svc Order vs. Electronic-1st	Incremental Charge - Manual Svc Order vs. Electronic-Add'l	Incremental Charge - Manual Svc Order vs. Electronic-Disc 1st	Incremental Charge - Manual Svc Order vs. Electronic-Disc Add'l
						Rec	Nonrecurring		Nonrecurring Disconnect		OSS Rates($)					
							First	Add'l	First	Add'l	SOMEC	SOMAN	SOMAN	SOMAN	SOMAN	SOMAN
	First Interoffice Transport - Dedicated - DS1 combination - Facility Termination Per Month			UNC1X	U1TF1	61.71	89.47	81.99	16.39	14.48						
	Per each Channel System 1/0 in combination Per Month			UNC1X	MQ1	107.57	91.24	62.71	10.56	9.81						
	Per each OCU-DP COCI (data) in combination - per month (2.4-64kbs)			UNCDX	1D1DD	1.19	6.59	4.73	0.00	0.00						
	3/1 Channel System in combination per month			UNC3X	MQ3	144.02	178.54	94.18	33.33	31.90						
	Per each DS1 COCI in combination per month			UNC1X	UC1D1	8.64	6.59	4.73	0.00	0.00						
	Additional 4-Wire 64Kbps Digital Grade Loop in same DS1 Interoffice Transport Combination - Zone 1		1	UNCDX	UDL64	29.93	126.66	89.12	59.35	14.61						
	Additional 4-Wire 64Kbps Digital Grade Loop in same DS1 Interoffice Transport Combination - Zone 2		2	UNCDX	UDL64	33.99	126.66	89.12	59.35	14.61						
	Additional 4-Wire 64Kbps Digital Grade Loop in same DS1 Interoffice Transport Combination - Zone 3		3	UNCDX	UDL64	34.74	126.66	89.12	59.35	14.61						
	Additional OCU-DP COCI (data) - DS1 to DS0 Channel System combination - per month (2.4-64kbs)			UNCDX	1D1DD	1.19	6.59	4.73	0.00	0.00						
	Each Additional DS1 Interoffice Channel per mile in same 3/1 Channel System per month			UNC1X	1L5XX	0.27										
	Each Additional DS1 Interoffice Channel Facility Termination in same 3/1 Channel System per month			UNC1X	U1TF1	61.71	89.47	81.99	16.39	14.48						
	Each Additional DS1 COCI in the same 3/1 channel system combination per month			UNC1X	UC1D1	8.64	6.59	4.73	0.00	0.00						
	Wholesale to UNE, Switch-As-Is Charge			UNC1X	UNCCC		5.61	5.61	7.00	7.00						
	First 2-Wire ISDN Loop in a DS1 Interoffice Combination Transport - Zone 1		1	UNCNX	U1L2X	25.21	117.58	80.03	53.05	10.61						
	First 2-Wire ISDN Loop in a DS1 Interoffice Combination Transport - Zone 2		2	UNCNX	U1L2X	32.76	117.58	80.03	53.05	10.61						
	First 2-Wire ISDN Loop in a DS1 Interoffice Combination Transport - Zone 3		3	UNCNX	U1L2X	37.70	117.58	80.03	53.05	10.61						
	First Interoffice Transport - Dedicated - DS1 combination - Per Mile per month			UNC1X	1L5XX	0.27										
	First Interoffice Transport - Dedicated - DS1 combination - Facility Termination per month			UNC1X	U1TF1	61.71	89.47	81.99	16.39	14.48						
	Per each Channel System 1/0 in combination - per month			UNC1X	MQ1	107.57	91.24	62.71	10.56	9.81						
	Per each 2-wire ISDN COCI (BRITE) in combination - per month			UNCNX	UC1CA	2.56	6.59	4.73	0.00	0.00						
	3/1 Channel System in combination per month			UNC3X	MQ3	144.02	178.54	94.18	33.33	31.90						
	Per each DS1 COCI in combination per month			UNC1X	UC1D1	8.64	6.59	4.73	0.00	0.00						
	Additional 2-wire ISDN Loop in same DS1Interoffice Transport Combination - Zone 1		1	UNCNX	U1L2X	25.21	117.58	80.03	53.05	10.61						
	Additional 2-wire ISDN Loop in same DS1Interoffice Transport Combination - Zone 2		2	UNCNX	U1L2X	32.76	117.58	80.03	53.05	10.61						
	Additional 2-wire ISDN Loop in same DS1Interoffice Transport Combination - Zone 3		3	UNCNX	U1L2X	37.70	117.58	80.03	53.05	10.61						
	Additional 2-wire ISDN COCI (BRITE) in same 1/0 channel system combination- per month			UNCNX	UC1CA	2.56	6.59	4.73	0.00	0.00						
	Each Additional DS1 Interoffice Channel per mile in same 3/1 Channel System per month			UNC1X	1L5XX	0.27										
	Each Additional DS1 Interoffice Channel Facility Termination in same 3/1 Channel System per month			UNC1X	U1TF1	61.71	89.47	81.99	16.39	14.48						
	Each Additional DS1 COCI in the same 3/1 channel system combination per month			UNC1X	UC1D1	8.64	6.59	4.73	0.00	0.00						
	Wholesale to UNE, Switch-As-Is Charge			UNC1X	UNCCC		5.61	5.61	7.00	7.00						
	EXTENDED 4-WIRE DS1 LOOP WITH DEDICATED DS1 INTEROFFICE TRANSPORT w/ 3/1 MUX															
	First 4-wire DS1 Digital Lcoal Loop in Combination - Zone 1		1	UNC1X	USLXX	90.87	253.03	157.89	44.80	11.73						
	First 4-wire DS1 Digital Lcoal Loop in Combination - Zone 2		2	UNC1X	USLXX	155.43	253.03	157.89	44.80	11.73						
	First 4-wire DS1 Digital Lcoal Loop in Combination - Zone 3		3	UNC1X	USLXX	261.89	253.03	157.89	44.80	11.73						
	First Interoffice Transport - Dedicated - DS1 combination - Per Mile Per Month			UNC1X	1L5XX	0.27										

UNBUNDLED NETWORK ELEMENTS - South Carolina

Attachment: 2 Exh. A

CATEGORY	RATE ELEMENTS	Interim	Zone	BCS	USOC	RATES($)					Svc Order Submitted Elec per LSR	Svc Order Submitted Manually per LSR	Incremental Charge - Manual Svc Order vs. Electronic-1st	Incremental Charge - Manual Svc Order vs. Electronic-Add'l	Incremental Charge - Manual Svc Order vs. Electronic-Disc 1st	Incremental Charge - Manual Svc Order vs. Electronic-Disc Add'l
						Rec	Nonrecurring		Nonrecurring Disconnect		OSS Rates($)					
							First	Add'l	First	Add'l	SOMEC	SOMAN	SOMAN	SOMAN	SOMAN	SOMAN
	First Interoffice Transport - Dedicated - DS1 combination - Facility Termination Per Month			UNC1X	U1TF1	61.71	89.47	81.99	16.39	14.48						
	3/1 Channel System in combination per month			UNC3X	MQ3	144.02	178.54	94.18	33.33	31.90						
	Per each DS1 COCI combination per month			UNC1X	UC1D1	8.64	6.59	4.73	0.00	0.00						
	Each Additional DS1 Interoffice Channel per mile in same 3/1 Channel System per month			UNC1X	1L5XX	0.27										
	Each Additional DS1 Interoffice Channel Facility Termination in same 3/1 Channel System per month			UNC1X	U1TF1	61.71	89.47	81.99	16.39	14.48						
	Each Additional DS1 COCI in the same 3/1 channel system combination per month			UNC1X	UC1D1	8.64	6.59	4.73	0.00	0.00						
	Additional 4-Wire DS1 Digital Local Loop in Combination - Zone 1		1	UNC1X	USLXX	90.87	253.03	157.89	44.80	11.73						
	Additional 4-Wire DS1 Digital Local Loop in Combination - Zone 2		2	UNC1X	USLXX	155.43	253.03	157.89	44.80	11.73						
	Additional 4-Wire DS1 Digital Local Loop in Combination - Zone 3		3	UNC1X	USLXX	261.89	253.03	157.89	44.80	11.73						
	Wholesale to UNE, Switch-As-Is Charge			UNC1X	UNCCC		5.61	5.61	7.00	7.00						
EXTENDED 4-WIRE 56 KBPS DIGITAL EXTENDED LOOP WITH DS0 INTEROFFICE TRANSPORT																
	First 4-wire 56 kbps Local Loop in combination - Zone 1		1	UNCDX	UDL56	29.93	126.66	89.12	59.35	14.61						
	First 4-wire 56 kbps Local Loop in combination - Zone 2		2	UNCDX	UDL56	33.99	126.66	89.12	59.35	14.61						
	First 4-wire 56 kbps Local Loop in combination - Zone 3		3	UNCDX	UDL56	34.74	126.66	89.12	59.35	14.61						
	First 4-wiree 56 kbps Interoffice Transport - Dedicated - Per Mile per month			UNCDX	1L5XX	0.0134										
	First 4-wire 56 kbps Interoffice Transport - Dedicated - Facility Termination per month			UNCDX	U1TD5	13.41	40.63	27.47	16.77	6.91						
	Wholesale to UNE, Switch-As-Is Charge			UNCDX	UNCCC		5.61	5.61	7.00	7.00						
EXTENDED 4-WIRE 64 KBPS DIGITAL EXTENDED LOOP WITH DS0 INTEROFFICE TRANSPORT																
	First 4-wire 64 kbps Local Loop in combination - Zone 1		1	UNCDX	UDL64	29.93	126.66	89.12	59.35	14.61						
	First 4-wire 64 kbps Local Loop in combination - Zone 2		2	UNCDX	UDL64	33.99	126.66	89.12	59.35	14.61						
	First 4-wire 64 kbps Local Loop in combination - Zone 3		3	UNCDX	UDL64	34.74	126.66	89.12	59.35	14.61						
	First I4-wire 65 kbps Interoffice Transport - Dedicated - Per Mile per month			UNCDX	1L5XX	0.0134										
	First 4-wire 64 kbps Interoffice Transport - Dedicated - Facility Termination per month			UNCDX	U1TD6	13.41	40.63	27.47	16.77	6.91						
	Wholesale to UNE, Switch-As-Is Charge			UNCDX	UNCCC		5.61	5.61	7.00	7.00						
ADDITIONAL NETWORK ELEMENTS																
When used as a part of a currently combined facility, the non-recurrng charges do not apply, but a Switch As Is charge does apply.																
When used as ordinarily combined network elements in All States, the non-recurring charges apply and the Switch As Is Charge does not.																
Nonrecurring Currently Combined Network Elements "Switch As Is" Charge																
	Wholesale to UNE, Switch-As-Is Conversion Charge, 2/4-wire VG			UNCVX	UNCCC		5.61	5.61	7.00	7.00						
	Wholesale to UNE, Switch-As-Is Conversion Charge, 4-wire VG			UNCDX	UNCCC		5.61	5.61	7.00	7.00						
	Wholesale to UNE, Switch-As-Is Conversion Charge, DS1			UNC1X	UNCCC		5.61	5.61	7.00	7.00						
	Wholesale to UNE, Switch-As-Is Conversion Charge, DS3			UNC3X	UNCCC		5.61	5.61	7.00	7.00						
	Wholesale to UNE, Switch-As-Is Conversion Charge, STS-1			UNCSX	UNCCC		5.61	5.61	7.00	7.00						
Optional Features & Functions:																
		I		U1TD1, ULDD1,UNC1X	CCOEF		0.00	0.00	0.00	0.00						
	Clear Channel Capability Super FrameOption - per DS1	I		U1TD1, ULDD1,UNC1X	CCOSF		0.00	0.00	0.00	0.00						
	Clear Channel Capability (SF/ESF) Option - Subsequent Activity - per DS1	I		ULDD1, U1TD1, UNC1X, USL	NRCCC		185.26	23.86	1.99	0.78						
	C-bit Parity Option - Subsequent Activity - per DS3	i		U1TD3, ULDD3, UE3, UNC3X	NRCC3		219.58	7.69	0.737	0.00						
MULTIPLEXER Interfaces																
	DS1 to DS0 Channel System per month			UNC1X	MQ1	107.57	91.24	62.71	10.56	9.81						
	Wholesale to UNE, Switch-As-Is Conversion Charge, 1/0 Channel System			UNC1X	UNCCC		5.61	5.61	7.00	7.00						

UNBUNDLED NETWORK ELEMENTS - South Carolina														Attachment: 2 Exh. A			
CATEGORY		RATE ELEMENTS	Interim	Zone	BCS	USOC	RATES($)					Svc Order Submitted Elec per LSR	Svc Order Submitted Manually per LSR	Incremental Charge - Manual Svc Order vs. Electronic-1st	Incremental Charge - Manual Svc Order vs. Electronic-Add'l	Incremental Charge - Manual Svc Order vs. Electronic-Disc 1st	Incremental Charge - Manual Svc Order vs. Electronic-Disc Add'l
							Rec	Nonrecurring		Nonrecurring Disconnect		OSS Rates($)					
								First	Add'l	First	Add'l	SOMEC	SOMAN	SOMAN	SOMAN	SOMAN	SOMAN
		OCU-DP COCI (data) - DS1 to DS0 Channel System - per month (2.4-64kbs) used for a Local Loop			UDL	1D1DD	1.19	6.59	4.73								
		OCU-DP COCI (data) - DS1 to DS0 Channel System - per month (2.4-64kbs) used for connection to a channelized DS1 Local Channel in the same SWC as collocation			U1TUD	1D1DD	1.19	6.59	4.73								
		2-wire ISDN COCI (BRITE) - DS1 to DS0 Channel System - per month for a Local Loop			UDN	UC1CA	2.56	6.59	4.73								
		2-wire ISDN COCI (BRITE) - DS1 to DS0 Channel System - per month used for connection to a channelized DS1 Local Channel in the same SWC as collocation			U1TUB	UC1CA	2.56	6.59	4.73								
		Voice Grade COCI - DS1 to DS0 Channel System - per month used for a Local Loop			UEA	1D1VG	0.56	6.59	4.73								
		Voice Grade COCI - DS1 to DS0 Channel System - per month used for connection to a channelized DS1 Local Channel in the same SWC as collocation			U1TUC	1D1VG	0.56	6.59	4.73								
		DS3 to DS1 Channel System per month			UNC3X	MQ3	144.02	178.54	94.18	33.33	31.90						
		Wholesale to UNE, Switch-As-Is Conversion Charge, 3/1 Channel System			UNC3X	UNCCC		5.61	5.61	7.00	7.00						
		STS-1 to DS1 Channel System per month			UNCSX	MQ3	144.02	178.54	94.18	33.33	31.90						
		Wholesale to UNE, Switch-As-Is Conversion Charge, 3/1 Channel System			UNCSX	UNCCC		5.61	5.61	7.00	7.00						
		DS1 COCI used with Loop per month			USL	UC1D1	8.64	6.59	4.73								
		DS1 COCI (used for connection to a channelized DS1 Local Channel in the same SWC as collocation) per month			U1TUA	UC1D1	8.64	6.59	4.73								
		DS1 COCI used with Interoffice Channel per month			U1TD1	UC1D1	8.64	6.59	4.73								
		DS3 Interface Unit (DS1 COCI) used with Local Channel per month			ULDD1	UC1D1	8.64	6.59	4.73								
	Access to DCS - Customer Reconfiguration (FlexServ)																
		Customer Reconfiguration Establishment						1.48		1.85							
		DS1 DSC Termination with DS0 Switching					27.96	25.60	19.70	16.67	13.41						
		DS1 DSC Termination with DS1 Switching					12.67	18.51	12.61	12.24	8.98						
		DS3 DSC Termination with DS1 Switching					176.51	25.60	19.70	16.67	13.41						
	Service Rearrangements																
		NRC - Change in Facility Assignment per circuit Service Rearrangement	I		U1TVX, U1TDX, UEA, UDL, U1TUC, U1TUD, U1TUB, ULDVX, ULDDX, UNCVX, UNCDX	URETD		269.90	47.10								
		NRC - Change in Facility Assignment per circuit Project Management (added to CFA per circuit if project managed)	I		U1TVX, U1TDX, UEA, UDL, U1TUC, U1TUD, U1TUB, ULDVX, ULDDX, UNCVX, UNCDX	URETB		1.28	1.28								
	Miscellaneous																
		NRC - Order Coordination Specific Time - Dedicated Transport	I		UNC1X	OCOSR		18.90	18.90								

UNBUNDLED NETWORK ELEMENTS - South Carolina

Attachment: 2 Exh. B

CATEGORY	RATE ELEMENTS	Interim	Zone	BCS	USOC	RATES ($) Rec	Nonrecurring First	Nonrecurring Add'l	Nonrecurring Disconnect First	Nonrecurring Disconnect Add'l	Svc Order Submitted Elec per LSR (OSS Rates ($) SOMEC)	Svc Order Submitted Manually per LSR (OSS Rates ($) SOMAN)	Incremental Charge - Manual Svc Order vs. Electronic-1st (OSS Rates ($) SOMAN)	Incremental Charge - Manual Svc Order vs. Electronic-Add'l (OSS Rates ($) SOMAN)	Incremental Charge - Manual Svc Order vs. Electronic-Disc 1st (OSS Rates ($) SOMAN)	Incremental Charge - Manual Svc Order vs. Electronic-Disc Add'l (OSS Rates ($) SOMAN)
UNBUNDLED EXCHANGE ACCESS LOOP																
2-WIRE HIGH BIT RATE DIGITAL SUBSCRIBER LINE (HDSL) COMPATIBLE LOOP																
	2 Wire Unbundled HDSL Loop including manual service inquiry & facility reservation - Zone 1		1	UHL	UHL2X	11.02										
	2 Wire Unbundled HDSL Loop including manual service inquiry & facility reservation - Zone 2		2	UHL	UHL2X	12.56										
	2 Wire Unbundled HDSL Loop including manual service inquiry & facility reservation - Zone 3		3	UHL	UHL2X	13.11										
	2 Wire Unbundled HDSL Loop without manual service inquiry and facility reservation - Zone 1		1	UHL	UHL2W	11.02										
	2 Wire Unbundled HDSL Loop without manual service inquiry and facility reservation - Zone 2		2	UHL	UHL2W	12.56										
	2 Wire Unbundled HDSL Loop without manual service inquiry and facility reservation - Zone 3		3	UHL	UHL2W	13.11										
4-WIRE HIGH BIT RATE DIGITAL SUBSCRIBER LINE (HDSL) COMPATIBLE LOOP																
	4 Wire Unbundled HDSL Loop including manual service inquiry and facility reservation - Zone 1		1	UHL	UHL4X	18.42										
	4-Wire Unbundled HDSL Loop including manual service inquiry and facility reservation - Zone 2		2	UHL	UHL4X	16.48										
	4-Wire Unbundled HDSL Loop including manual service inquiry and facility reservation - Zone 3		3	UHL	UHL4X	19.37										
	4-Wire Unbundled HDSL Loop without manual service inquiry and facility reservation - Zone 1		1	UHL	UHL4W	18.42										
	4-Wire Unbundled HDSL Loop without manual service inquiry and facility reservation - Zone 2		2	UHL	UHL4W	16.48										
	4-Wire Unbundled HDSL Loop without manual service inquiry and facility reservation - Zone 3		3	UHL	UHL4W	19.37										
4-WIRE DS1 DIGITAL LOOP																
	4-Wire DS1 Digital Loop - Zone 1		1	USL	USLXX	91.44										
	4-Wire DS1 Digital Loop - Zone 2		2	USL	USLXX	156.40										
	4-Wire DS1 Digital Loop - Zone 3		3	USL	USLXX	263.52										
HIGH CAPACITY UNBUNDLED LOCAL LOOP																
	High Capacity Unbundled Local Loop - DS3 - Per Mile per month			UE3	1L5ND	14.10										
	High Capacity Unbundled Local Loop - DS3 - Facility Termination per month			UE3	UE3PX	352.31										
	High Capacity Unbundled Local Loop - STS-1 - Per Mile per month			UDLSX	1L5ND	14.10										
	High Capacity Unbundled Local Loop - STS-1 - Facility Termination per month			UDLSX	UDLS1	360.51										
UNBUNDLED DEDICATED TRANSPORT																
INTEROFFICE CHANNEL - DEDICATED TRANSPORT																
	Interoffice Channel - Dedicated Channel - DS1 - Per Mile per month			U1TD1	1L5XX	0.39										
	Interoffice Channel - Dedicated Tranport - DS1 - Facility Termination			U1TD1	U1TF1	88.71										
	Interoffice Channel - Dedicated Transport - DS3 - Per Mile per month			U1TD3	1L5XX	9.22										
	Interoffice Channel - Dedicated Transport - DS3 - Facility Termination per month			U1TD3	U1TF3	1012.75										
	Interoffice Channel - Dedicated Transport - STS-1 - Per Mile per month			U1TS1	1L5XX	9.22										
	Interoffice Channel - Dedicated Transport - STS-1 - Facility Termination			U1TS1	U1TFS	1012.63										
ENHANCED EXTENDED LINK (EELs)																
	NOTE: The monthly recurring and non-recurring charges below will apply and the Switch-As-Is Charge will not apply for UNE combinations provisioned as ' Ordinarily Combined' Network Elements.															
	NOTE: The monthly recurring and the Switch-As-Is Charge and not the non-recurring charges below will apply for UNE combinations provisioned as ' Currently Combined' Network Elements.															
2-WIRE VOICE GRADE LOOP FOR USE IN A COMBINATION																
	2-Wire VG Loop (SL2) in Combination - Zone 1		1	UNCVX	UEAL2	19.18										
	2-Wire VG Loop (SL2) in Combination - Zone 2		2	UNCVX	UEAL2	26.60										
	2-Wire VG Loop (SL2) in Combination - Zone 3		3	UNCVX	UEAL2	32.73										
	Voice Grade COCI - Per Month			UNCVX	1D1VG	0.64										
4-WIRE VOICE GRADE LOOP FOR USE IN A COMBINATION																
	4-Wire Analog Voice Grade Loop in Combination - Zone 1		1	UNCVX	UEAL4	37.48										
	4-Wire Analog Voice Grade Loop in Combination - Zone 2		2	UNCVX	UEAL4	50.47										
	4-Wire Analog Voice Grade Loop in Combination - Zone 3		3	UNCVX	UEAL4	49.89										
	Voice Grade COCI in combination - per month			UNCVX	1D1VG	0.64										
4-WIRE 56 KBPS DIGITAL LOOP FOR USE IN A COMBINATION																
	4-Wire 56Kbps Digital Grade Loop in Combination - Zone 1		1	UNCDX	UDL56	34.42										
	4-Wire 56Kbps Digital Grade Loop in Combination - Zone 2		2	UNCDX	UDL56	39.09										
	4-Wire 56Kbps Digital Grade Loop in Combination - Zone 3		3	UNCDX	UDL56	39.95										
	OCU-DP COCI (data) per month (2.4-64kbs)			UNCDX	1D1DD	1.37										
4-WIRE 64 KBPS DIGITAL LOOP FOR USE IN A COMBINATION																
	4-Wire 64Kbps Digital Grade Loop in Combination - Zone 1		1	UNCDX	UDL64	34.42										
	4-Wire 64Kbps Digital Grade Loop in Combination - Zone 2		2	UNCDX	UDL64	39.09										
	4-Wire 64Kbps Digital Grade Loop in Combination - Zone 3		3	UNCDX	UDL64	39.95										
	OCU-DP COCI (data) - in combination - per month (2.4-64kbs)			UNCDX	1D1DD	1.37										
2-WIRE ISDN LOOP FOR USE IN COMBINATION																
	2-Wire ISDN Loop in Combination - Zone 1		1	UNCNX	U1L2X	28.99										

UNBUNDLED NETWORK ELEMENTS - South Carolina

Attachment: 2 Exh. B

CATEGORY	RATE ELEMENTS	Interim	Zone	BCS	USOC	RATES ($) Rec	Nonrecurring First	Nonrecurring Add'l	Nonrecurring Disconnect First	Nonrecurring Disconnect Add'l	Svc Order Submitted Elec per LSR (OSS Rates ($)) SOMEC	Svc Order Submitted Manually per LSR SOMAN	Incremental Charge - Manual Svc Order vs. Electronic-1st SOMAN	Incremental Charge - Manual Svc Order vs. Electronic-Add'l SOMAN	Incremental Charge - Manual Svc Order vs. Electronic-Disc 1st SOMAN	Incremental Charge - Manual Svc Order vs. Electronic-Disc Add'l SOMAN
	2-Wire ISDN Loop in Combination - Zone 2		2	UNCNX	U1L2X	37.67										
	2-Wire ISDN Loop in Combination - Zone 3		3	UNCNX	U1L2X	43.36										
	2-wire ISDN COCI (BRITE) - in combination - per month			UNCNX	UC1CA	2.94										
4-WIRE DS1 DIGITAL LOOP FOR USE IN A COMBINATION																
	4-Wire DS1 Digital Loop in Combination - Zone 1		1	UNC1X	USLXX	104.50										
	4-Wire DS1 Digital Loop in Combination - Zone 2		2	UNC1X	USLXX	178.74										
	4-Wire DS1 Digital Loop in Combination - Zone 3		3	UNC1X	USLXX	301.17										
	DS1 COCI in combination per month			UNC1X	UC1D1	9.94										
2 WIRE VOICE GRADE INTEROFFICE TRANSPORT FOR USE IN A COMBINATION																
	Interoffice Transport - 2-wire VG - Dedicated- Per Mile Per Month			UNCVX	1L5XX	0.02										
	Interoffice Transport - 2-wire VG - Dedicated - Facility Termination per month			UNCVX	U1TV2	22.36										
4 WIRE VOICE GRADE INTEROFFICE TRANSPORT FOR USE IN A COMBINATION																
	Interoffice Transport - 4-wire VG - Dedicated - Per Mile Per Month			UNCVX	1L5XX	0.02										
	Interoffice Transport - 4-wire VG - Dedicated - Facility Termination per month			UNCVX	U1TV4	19.58										
DS1 INTEROFFICE TRANSPORT FOR COMBINATION																
	Interoffice Transport - Dedicated - DS1 combination - Per Mile per month			UNC1X	1L5XX	0.31										
	Interoffice Transport - Dedicated - DS1 combination - Facility Termination per month			UNC1X	U1TF1	70.97										
DS3 INTEROFFICE TRANSPORT FOR USE IN A COMBINATION																
	Interoffice Transport - Dedicated - DS3 combination - Per Mile Per Month			UNC3X	1L5XX	7.38										
	Interoffice Transport - Dedicated - DS3 - Facility Termination per month			UNC3X	U1TF3	810.20										
STS-1 INTEROFFICE TRANSPORT FOR USE IN COMBINATION																
	Interoffice Transport - Dedicated - STS-1 combination - Per Mile Per Month			UNCSX	1L5XX	7.38										
	Interoffice Transport - Dedicated - STS-1 combination - Facility Termination per month			UNCSX	U1TFS	810.11										
4-WIRE 56 KBPS DIGITAL LOOP WITH 56 KBPS INTEROFFICE TRANSPORT																
	4-wire 56 kbps Local Loop in combination - Zone 1		1	UNCDX	UDL56	34.42										
	4-wire 56 kbps Local Loop in combination - Zone 2		2	UNCDX	UDL56	39.09										
	4-wire 56 kbps Local Loop in combination - Zone 3		3	UNCDX	UDL56	39.95										
	Interoffice Transport - Dedicated - 4-wire 56 kbps combination - Per Mile per month			UNCDX	1L5XX	0.02										
	Interoffice Transport - Dedicated - 4-wire 56 kbps combination - Facility Termination per month			UNCDX	U1TD5	15.42										
4-WIRE 64 KBPS DIGITAL EXTENDED LOOP WITH 64 KBPS INTEROFFICE TRANSPORT																
	4-wire 64 kbps Lcoal Loop in Combination - Zone 1		1	UNCDX	UDL64	34.42										
	4-wire 64 kbps Lcoal Loop in Combination - Zone 2		2	UNCDX	UDL64	39.09										
	4-wire 64 kbps Lcoal Loop in Combination - Zone 3		3	UNCDX	UDL64	39.95										
	Interoffice Transport - Dedicated - 4-wire 64 kbps combination - Per Mile per month			UNCDX	1L5XX	0.02										
	Interoffice Transport - Dedicated - 4-wire 64 kbps combination - Facility Termination per month			UNCDX	U1TD6	15.42										
4-WIRE 56 KBPS DIGITAL EXTENDED LOOP WITH DS0 INTEROFFICE TRANSPORT																
	4-wire 56 kbps Local Loop in combination - Zone 1		1	UNCDX	UDL56	34.42										
	4-wire 56 kbps Local Loop in combination - Zone 2		2	UNCDX	UDL56	39.09										
	4-wire 56 kbps Local Loop in combination - Zone 3		3	UNCDX	UDL56	39.95										
	4-wiree 56 kbps Interoffice Transport - Dedicated - Per Mile per month			UNCDX	1L5XX	0.02										
	4-wire 56 kbps Interoffice Transport - Dedicated - Facility Termination per month			UNCDX	U1TD5	15.42										
4-WIRE 64 KBPS DIGITAL EXTENDED LOOP WITH DS0 INTEROFFICE TRANSPORT																
	4-wire 64 kbps Local Loop in combination - Zone 1		1	UNCDX	UDL64	34.42										
	4-wire 64 kbps Local Loop in combination - Zone 2		2	UNCDX	UDL64	39.09										
	4-wire 64 kbps Local Loop in combination - Zone 3		3	UNCDX	UDL64	39.95										
	I4-wire 65 kbps Interoffice Transport - Dedicated - Per Mile per month			UNCDX	1L5XX	0.02										
	4-wire 64 kbps Interoffice Transport - Dedicated - Facility Termination per month			UNCDX	U1TD6	15.42										
DS1 DIGITAL LOOP AND DS1 INTERFOFFICE TRANSPORT																
	4-Wire DS1 Digital Loop in Combination - Zone 1		1	UNC1X	USLXX	104.50										
	4-Wire DS1 Digital Loop in Combination - Zone 2		2	UNC1X	USLXX	178.74										
	4-Wire DS1 Digital Loop in Combination - Zone 3		3	UNC1X	USLXX	301.17										
	Interoffice Transport - Dedicated - DS1 combination - Per Mile per month			UNC1X	1L5XX	0.31										
	Interoffice Transport - Dedicated - DS1 combination - Facility Termination per month			UNC1X	U1TF1	70.97										
DS3 DIGITAL LOOP WITH DEDICATED DS3 INTEROFFICE TRANSPORT																
	DS3 Local Loop in combination - per mile per month			UNC3X	1L5ND	14.10										
	DS3 Local Loop in combination - Facility Termination per month			UNC3X	UE3PX	352.31										
	Interoffice Transport - Dedicated - DS3 - Per Mile per month			UNC3X	1L5XX	7.38										
	Interoffice Transport - Dedicated - DS3 combination - Facility Termination per month			UNC3X	U1TF3	810.20										

UNBUNDLED NETWORK ELEMENTS - South Carolina

Attachment: 2 Exh. B

CATEGORY	RATE ELEMENTS	Interim	Zone	BCS	USOC	RATES ($) Rec	Nonrecurring First	Nonrecurring Add'l	Nonrecurring Disconnect First	Nonrecurring Disconnect Add'l	Svc Order Submitted Elec per LSR	Svc Order Submitted Manually per LSR	Incremental Charge - Manual Svc Order vs. Electronic-1st	Incremental Charge - Manual Svc Order vs. Electronic-Add'l	Incremental Charge - Manual Svc Order vs. Electronic-Disc 1st	Incremental Charge - Manual Svc Order vs. Electronic-Disc Add'l
											OSS Rates ($)					
											SOMEC	SOMAN	SOMAN	SOMAN	SOMAN	SOMAN
STS-1 DIGITAL LOOP WITH DEDICATED STS-1 INTEROFFICE TRANSPORT																
	STS-1 Local Lolp in combination - per mile per month			UNCSX	1L5ND	14.10										
	STS-1 Local Loop in combination - Facility Termination per month			UNCSX	UDLS1	360.51										
	Interoffice Transport - Dedicated - STS-1 combination - per mile per month			UNCSX	1L5XX	7.38										
	Interoffice Transport - Dedicated - STS-1 combination - Facility Termination per month			UNCSX	U1TFS	810.11										
ADDITIONAL NETWORK ELEMENTS																
	When used as a part of a currently combined facility, the non-recurrng charges do not apply, but a Switch As Is charge does apply.															
	When used as ordinarily combined network elements in All States, the non-recurring charges apply and the Switch As Is Charge does not.															
	Nonrecurring Currently Combined Network Elements "Switch As Is" Charge (One applies to each combination)															
	Optional Features & Functions:															
	Clear Channel Capability Extended Frame Option - per DS1	I		U1TD1, ULDD1,UNC1X	CCOEF		0.00	0.00	0.00	0.00						
	Clear Channel Capability Super FrameOption - per DS1	I		U1TD1, ULDD1,UNC1X	CCOSF		0.00	0.00	0.00	0.00						
	Clear Channel Capability (SF/ESF) Option - Subsequent Activity - per DS1	I		ULDD1, U1TD1, UNC1X, USL	NRCCC		185.26	23.86	1.99	0.78						
	C-bit Parity Option - Subsequent Activity - per DS3	i		U1TD3, ULDD3, UE3, UNC3X	NRCC3		219.58	7.69	0.737	0.00						
MULTIPLEXERS																
	DS1 to DS0 Channel System per month			UNC1X	MQ1	123.71										
	OCU-DP COCI (data) - DS1 to DS0 Channel System - per month (2.4-64kbs) used for a Local Loop			UDL	1D1DD	1.37										
	OCU-DP COCI (data) - DS1 to DS0 Channel System - per month (2.4-64kbs) used for connection to a channelized DS1 Local Channel in the same SWC as collocation			U1TUD	1D1DD	1.37										
	2-wire ISDN COCI (BRITE) - DS1 to DS0 Channel Systsem - per month for a Local Loop			UDN	UC1CA	2.94										
	2-wire ISDN COCI (BRITE) - DS1 to DS0 Channel Systsem - per month used for connection to a channelized DS1 Local Channel in the same SWC as collocation			U1TUB	UC1CA	2.94										
	Voice Grade COCI - DS1 to DS0 Channel System - per month used for a Local Loop			UEA	1D1VG	0.64										
	Voice Grade COCI - DS1 to DS0 Channel System - per month used for connection to a channelized DS1 Local Channel in the same SWC as collocation			U1TUC	1D1VG	0.64										
	DS3 to DS1 Channel System per month			UNC3X	MQ3	165.62										
	STS-1 to DS1 Channel System per month			UNCSX	MQ3	165.62										
	DS1 COCI used with Loop per month			USL	UC1D1	9.94										
	DS1 COCI (used for connection to a channelized DS1 Local Channel in the same SWC as collocation) per month			U1TUA	UC1D1	9.94										
	DS1 COCI used with Interoffice Channel per month			U1TD1	UC1D1	9.94										
	DS3 Interface Unit (DS1 COCI) used with Local Channel per month			ULDD1	UC1D1	9.94										

ATTACHMENT 3

LOCAL INTERCONNECTION

TABLE OF CONTENTS

1. NETWORK INTERCONNECTION.....3

2. METHODS OF INTERCONNECTION 7

3. INTERCONNECTION TRUNKING AND ROUTING.....14

4. NETWORK DESIGN AND MANAGEMNT FOR INTERCONNECTION……15

5. NETWORK MAINTENANCE.....35

EXHIBIT A

EXHIBIT B

EXHIBIT C

EXHIBIT D

EXHIBIT E

EXHIBIT F

LOCAL INTERCONNECTION

1 NETWORK INTERCONNECTION

1.1 The Parties shall provide interconnection with each other's network for the transmission and routing of telephone exchange service *a*nd exchange access service.

1.1.1 BellSouth shall permit AT&T to interconnect at any technically feasible point on the BellSouth network, including, without limitation, tandems, end offices, outside plant facilities, Commercial Intra-Building Interconnections and as described in 47 CFR §51.305.The point where the parties interconnect shall be called a Point of Interconnection ("POI") . Such POIs shall be used to (1) deliver Reciprocal Compensation Traffic originating on AT&T's network to BellSouth and (2) to exchange Meet Point Billing Traffic 3) and Transit Traffic.

1.1.2 At AT&T's sole discretion, AT&T will establish at least one or more POIs on BellSouth's network within a LATA in which AT&T offers local exchange service.

1.1.3 BellSouth shall deliver Reciprocal Compensation Traffic originating on the BellSouth network and at such points mutually agreed to between the Parties or, lacking mutual agreement, at the POI established by AT&T for the delivery to BellSouth of its Reciprocal Compensation Traffic originating on AT&T's network.

1.1.4 The originating Party shall compensate the terminating Party under terms of this Attachment for any transport that is used to carry Reciprocal Compensation Traffic between the POI and a distant switch within the same LATA as the POI serving the terminating end user. Such transport shall be either Dedicated Transport or Common Transport pursuant to the interconnection method elected by the originating party, subject to the terms of this Attachment.

1.1.5 In the event that AT&T elects to offer service within a LATA using a switch located in another LATA, AT&T agrees to provide the transport for both Parties' traffic between the remote AT&T switch and a point designated by AT&T (*e.g.*, AT&T's Point of Presence) within the LATA in which AT&T offers service. Such facility point of presence shall be deemed to be an AT&T Switch Center for the purposes of this Attachment.

1.1.6 Installation, Testing Maintenance and Repair. Interconnection shall be equal in quality to that provided by BellSouth to itself or any subsidiary, affiliate, or third party. "Equal in Quality" shall have the meaning accorded in Section 51.305(a)(3) of the FCC's Rules, 47 C.F.R. § 51.305(a)(3). If BellSouth is at any time unable to fulfill its obligations under this Section, it shall notify AT&T of its inability to do so and will negotiate alternative intervals in good faith. BellSouth shall provide AT&T with the same scheduled and non-scheduled maintenance, including, without limitation, required and recommended maintenance intervals and procedures, for all

services, including Interconnection and Network Elements, provided to AT&T under this Agreement that it currently provides for the maintenance of its own network. BellSouth shall provide AT&T at least sixty (60) days' advance notice of any scheduled maintenance activity which may impact AT&T's Customers. Scheduled maintenance shall include, without limitation, such activities as switch software retrofits, power tests, major equipment replacements and cable rolls. Plans for scheduled maintenance shall include, at a minimum, the following information: location and type of facilities, general description of work to be performed, date and time work is scheduled to commence, and date and time work is scheduled to be completed.

1.1.7 If AT&T chooses to interconnect using a single interconnection trunk group within a LATA, the interconnection trunk group must be at a BellSouth access or local tandem. Furthermore, AT&T must establish an interconnection trunk group(s) at all BellSouth access and local tandems where AT&T NXXs are "homed." A "Homing" arrangement is defined by a "Final" Trunk Group between the BellSouth access or local tandem and AT&T End Office switch. A "Final" Trunk Group is the last choice telecommunications path between the access or local tandem and End Office switch. It is AT&T's responsibility to enter its own NPA/NXX access and/or local tandem "homing" arrangements into the national Local Exchange Routing Guide ("LERG"). In order for AT&T to home its NPA/NXX(s) on a BellSouth access or local tandem, AT&T's NPA/NXX(s) must be assigned to an exchange rate center area served by that BellSouth access or local tandem and as specified by BellSouth.

1.2 Interconnection trunk groups are available at either access tandems, local tandems, End Offices, or any other technically feasible point, as described in this Agreement. AT&T's requested interconnection trunk groups will also be used for the receipt and delivery of transit traffic at BellSouth access and local tandems. Interconnection trunk groups established at the BellSouth local tandem apply only to AT&T-originated Reciprocal Compensation Traffic and local originating and terminating transit traffic.

1.3 The Parties will work cooperatively to establish the most efficient trunking network in accordance with the provisions set forth in this Attachment 3 and accepted industry practices.

1.4 Each Party will be responsible for engineering its network (i.e., the underlying facilities on which trunks are provisioned) and providing, or causing to be provided, any necessary equipment on its side of the POI.

1.5 A minimum of one POI shall be established in each LATA in which AT&T originates, terminates, or exchanges Reciprocal Compensation Traffic traffic and interconnects with BellSouth. The location of the initial POI shall be established by mutual agreement of the Parties. In selecting the initial POI, both Parties will act in good faith and select the point that is most efficient for both Parties. Each Party shall be responsible for engineering and maintaining the network on its side of the

POI. Establishment of an Initial POI will be initiated by written request and will be based on traffic volumes and patterns, facilities available, and other factors unique to the area. If the Parties are not able to reach mutual agreement on an initial POI within thirty (30) calendar days of the date of the written request, each Party will designate the initial POI for its originated traffic.

1.5.1 Additional POIs in a particular LATA may be established by mutual agreement of the Parties. Absent mutual agreement, in order to establish additional POIs in a LATA, the traffic originated from AT&T or BellSouth destined to the other Party at the proposed additional POI must exceed 8.9 million minutes of local or ISP-bound traffic per month for three consecutive months. Additionally, any end office to be designated as a POI must be more than 25 miles from an existing POI. AT&T may designate one additional POI per state without qualification during the term of this Agreement. BellSouth will not designate a POI at a Central Office where physical or virtual collocation space or BellSouth fiber connectivity is not available.

1.5.2 Upon written notification from the Party requesting the establishment of an additional POI, the receiving Party has forty-five (45) calendar days to analyze, respond to, and negotiate in good faith the establishment of and location of such additional POI. If the receiving Party disagrees that the traffic and mileage thresholds set forth herein have been met, then the requesting Party may utilize the dispute resolution procedure set forth in this Agreement. The Parties recognize that they have in their networks existing POIs established under previous interconnection agreements. The Parties further recognize that there are switching locations that would immediately qualify upon the signing of this Agreement to be established as additional POI. Effective on the date this Agreement is signed, the Parties agree that such existing switching locations will be transitioned to additional POIs in accordance with the following schedule: for the first year of this Agreement, no more than one (1) existing switching location will be transitioned to an additional POI per LATA per six (6) months. For the remaining term of this Agreement, no more than two (2) existing switching locations will be transitioned to additional POIs per LATA per six (6) month period.

1.5.3 A Billing POI ("BPOI") is defined as the POI specified by BellSouth for delivery of BellSouth originated traffic to AT&T for which AT&T agrees to pay BellSouth for Interoffice Dedicated Transport and associated Multiplexing for BellSouth to transport Reciprocal Compensation Traffic from the BPOI to the POI designated by AT&T when AT&T does not want to establish a POI.as set forth in Section 1.1.6 above. Compensation for said transport and multiplexing is as set forth in the Interconnection Compensation section of this Attachment.

1.6 With the exception of the Billing POI, Multiplexing compensation and Transit Traffic compensation, the Parties shall institute a "bill and keep" compensation plan under which neither Party will charge the other Party recurring and nonrecurring charges for trunks (one-way or two-way) and associated dedicated facilities for the exchange of Reciprocal Compensation Traffic. Each Party has the obligation to install the

appropriate trunks and associated facilities on its respective side of the POI and is responsible for bearing its own costs on its side of the POI. Both Parties, as appropriate, shall be compensated for the ordering of trunks and facilities used exclusively for Transit Traffic and for ancillary traffic types including, but not limited to, 911 and OS/DA. The Parties agree that charges for such trunks and facilities are as set forth in Exhibit A to this Attachment or the applicable tariff. In the event that a Party chooses to lease facilities from the other Party in lieu of installing facilities on its side of the POI as required by this Agreement, such facilities are not subject to "bill and keep," but shall be purchased in accordance with 1.6.1 and 1.6.2.

1.6.1 In lieu of providing facilities on its side of POI, either Party may purchase Local Channel facilities from the other Party, at the cost-based rates identified in Exhibit A to this Attachment, from the leasing Party's switch or Point of Presence to that Party's serving wire center. The portion of Local Channel facilities utilized for Reciprocal Compensation Traffic shall be determined based upon the application of the Percent Local Facility ("PLF") Factor as defined in this Attachment. Additionally, the charges applied to the portion of the Local Channel used for Reciprocal Compensation Traffic as determined by the PLF are as set forth in Exhibit A to this Attachment. This factor shall be reported in addition to the switched dedicated transport jurisdictional factors specified in the BellSouth intrastate and interstate switched access tariffs.

1.6.2 Additionally, in lieu of providing facilities on its side of the POI, either Party may purchase, at the cost-based rates identified in Exhibit A to this Attachment, Dedicated Interoffice Transport facilities from its designated serving wire center to the POI. The portion of Dedicated Interoffice Transport facilities utilized for Reciprocal Compensation Traffic shall be determined based upon the application of the Percent Local Facility (PLF) Factor as defined in this Attachment. Additionally, the charges applied to the portion of the Dedicated Interoffice Transport used for Reciprocal Compensation Traffic as determined by the PLF are as set forth in Exhibit A to this Attachment. This factor shall be reported in addition to the switched dedicated transport jurisdictional factors specified in the BellSouth intrastate and interstate switched access tariffs.

1.7 For the purposes of this Attachment 3, Local Channel is defined as a switch transport facility between a Party's Point of Presence and its designated serving wire center.

1.8 For the purposes of this Attachment 3, Serving Wire Center is defined as the wire center owned or leased by one Party from which the other Party would normally obtain dial tone for its Point of Presence.

1.9 For the purposes of this Attachment 3, Dedicated Transport is defined as a switch transport facility between a Party's designated serving wire center and the first point of switching on the other Party's common (shared) network.

2. METHODS OF INTERCONNECTION

2.1 AT&T may specify one or more of the following methods to interconnect with the BellSouth network:

2.1.1 Collocation - BellSouth shall provide collocation to AT&T pursuant to the terms set forth in Attachment 4 of this Agreement, incorporated herein by this reference. AT&T may, at its option, purchase such collocation at the rates, terms, and conditions set forth in Attachment 4 of this Agreement, incorporated herein by this reference.

2.1.2 Leased Facilities - where AT&T utilizes the facilities offered by BellSouth. Such leased facilities shall be provided at the rates, terms, and conditions set forth in this Attachment 3 pursuant to Section 1.6-1.6.2. At AT&T's request, it may lease separate facilities for the sole purpose of delivering undipped 8YY traffic from AT&T's end users to BellSouth's Service Switching Port ("SSP") for dipping into BellSouth's toll free database.

2.1.3 Third Party Facilities - where AT&T utilizes the facilities provided by a source other than itself or BellSouth. AT&T shall comply with industry standards to maintain network integrity and will be solely responsible for any charges or fees assessed by the third party for use of its facilities.

2.1.4 Intra-Building Interconnection – The following terms and conditions shall apply to Intra-building Interconnection:

2.1.4.1 Intra-building Interconnection may only be used where both Parties have a presence and at least 10% ownership interest within a central office building listed below.

City, State	Location	CLLI Code	Address	A/B Condo/ Convey	AT&T % own	RBOC % own
Montgomery, AL	**AL0010**	**MTGMALMT**	**25 Adams Avenue**	**A**	**80.09**	**19.91**
Birmingham, AL	**Al0080**	**BRHMALMT**	**1715 6th Avenue N.**	**A**	**54.63**	**45.37**
Orlando, FL	**FL0150**	**ORLDFLMA**	**45 N. Magnolia Street**	**A**	**56.48**	**43.52**
Jacksonville, FL	**FL0760**	**JCVLFLCL**	**424 Pearl Street**	**B**	**46.43**	**53.57**
West Palm Beach, FL	**FL3440**	**WPBHFLAN**	**325 Gardenia Street**	**A**	**66.18**	**33.82**

Panama City, FL	**FLA610**	**PNCYFLMA**	**111 East 5th Street**	**A**	**59.28**	**40.72**
Pensacola, FL	**FLE460**	**PNSCFLBL**	**30 West Belmont Street**	**B**	**54.03**	**45.97**
Daytona Beach, FL	**FLE470**	**DYBHFLMA**	**268 N. Ridgewood**	**B**	**41.30**	**58.70**
Augusta, GA	**GA0020**	**AGSTGAMT**	**937 Greene St.**	**A**	**62.72**	**37.28**
Savannah, GA	**GAA640**	**SVNHGABS**	**1300 Bull Street**	**B**	**43.80**	**56.20**
New Orleans, LA	**LA0010**	**NWORLAMA**	**500 Baronne Street**	**B-Condo**	**43.26**	**56.74**
Baton Rouge, LA	**LA0050**	**BTRGLAMA**	**333 North 6th Street**	**A-Condo**	**64.23**	**35.77**
Raleigh, NC	**NC0010**	**RLGHNCMO**	**121 W. Morgan St.**	**B**	**43.32**	**56.68**
Charlotte, NC	**NC0040**	**CHRLNCCA**	**208 N. Caldwell St.**	**B**	**44.45**	**55.55**
Greensboro, NC	**NC0120**	**GNBONCEU**	**100 S. Eugene St.**	**B**	**42.84**	**57.16**
Charleston, SC	**SC3460**	**CHTNSCDT**	**180 Calhoun Street**	**B**	**11.70**	**26.5/61.8**
Nashville, TN	**TN0010**	**NSVLTNMT**	**185 2nd Avenue N.**	**B**	**49.72**	**50.28**
Memphis, TN	**TN0030**	**MMPHTNMA**	**201/215 Court St.**	**A**	**64.74**	**35.26**
Knoxville, TN	**TN0070**	**KNVLTNMA**	**410 Magnolia Ave.**	**B**	**44.51**	**55.49**

2.1.4.2 AT&T may designate the use of either a fiber optic cable or coax (i.e., DS-3 ABAM) cable, subject to the terms of this Attachment;

2.1.4.3 Such cable will be installed via the shortest practical route between the BellSouth's and AT&T's equipment;

2.1.4.4 AT&T will be responsible for the reasonably incurred installation and maintenance costs for such cable;

2.1.4.5 AT&T will have sole use of the cable unless the parties mutually agree to joint-use and to an allocation of financial responsibility and an apportionment of the facility capacity of the cable; and

2.1.4.6 No other charges shall apply to AT&T's use of the facilities over such arrangement.

2.1.5 Commercial Intra-building Interconnection – where both Parties have constructed broadband facilities into a commercial building (i.e., a building that is not a telephone central office) and agree to establish a POI at such location utilizing intra-building cable.

2.1.6 "Fiber Meet" is an interconnection arrangement whereby the Parties jointly establish an optical fiber interface (as opposed to an electrical interface), at which one Party's facilities, provisioning, and maintenance responsibility begins and the other Party's responsibility ends (i.e., POI). A Fiber Meet shall be an arrangement as set forth in Section 2.3 of this Attachment 3.

2.1.7 Any other method determined to be technically feasible and requested by AT&T shall be done pursuant to the process defined in Attachment 10 of this Agreement, incorporated herein by this reference.

2.2 BellSouth may specify one or more of the following to interconnect with the AT&T network:

2.2.1 Collocation - AT&T, at its sole discretion, may permit BellSouth to utilize space and power in AT&T facilities specified by AT&T solely for the purpose of terminating BellSouth's local traffic. BellSouth may request installation of both cable and equipment, or cable only. The pricing, terms and conditions of such arrangement shall be pursuant to Exhibit B of this Attachment 3, incorporated herein by this reference.

2.2.2 Leased Facilities - where the Party requesting interconnection utilizes the facilities offered by the other Party pursuant to Section 1.6.1-1.6.2. Such leased facilities shall be provided at the rates, terms, and conditions set forth in this Attachment 3 and be consistent with applicable law.

2.2.3 Third Party Facilities - where BellSouth utilizes the facilities provided by a source other than itself or AT&T. BellSouth shall comply with industry standards to maintain network integrity and will be solely responsible for any charges or fees assessed by the third party for use of its facilities.

2.2.4 Intra-Building Interconnection –The following terms and conditions shall apply to Intra-building Interconnection:

2.2.4.1 Intra-building Interconnection may only be used where both Parties have a presence and at least 10% ownership interest within a central office building listed below.

City, State	Location	CLLI Code	Address	A/B Condo/ Convey	AT&T % own	RBOC % own
Montgomery, AL	**AL0010**	**MTGMALMT**	**25 Adams Avenue**	**A**	**80.09**	**19.91**
Birmingham, AL	**Al0080**	**BRHMALMT**	**1715 6th Avenue N.**	**A**	**54.63**	**45.37**
Orlando, FL	**FL0150**	**ORLDFLMA**	**45 N. Magnolia Street**	**A**	**56.48**	**43.52**
Jacksonville, FL	**FL0760**	**JCVLFLCL**	**424 Pearl Street**	**B**	**46.43**	**53.57**
West Palm Beach, FL	**FL3440**	**WPBHFLAN**	**325 Gardenia Street**	**A**	**66.18**	**33.82**
Panama City, FL	**FLA610**	**PNCYFLMA**	**111 East 5th Street**	**A**	**59.28**	**40.72**
Pensacola, FL	**FLE460**	**PNSCFLBL**	**30 West Belmont Street**	**B**	**54.03**	**45.97**
Daytona Beach, FL	**FLE470**	**DYBHFLMA**	**268 N. Ridgewood**	**B**	**41.30**	**58.70**
Augusta, GA	**GA0020**	**AGSTGAMT**	**937 Greene St.**	**A**	**62.72**	**37.28**
Savannah, GA	**GAA640**	**SVNHGABS**	**1300 Bull Street**	**B**	**43.80**	**56.20**
New Orleans, LA	**LA0010**	**NWORLAMA**	**500 Baronne Street**	**B-Condo**	**43.26**	**56.74**
Baton Rouge, LA	**LA0050**	**BTRGLAMA**	**333 North 6th Street**	**A-Condo**	**64.23**	**35.77**
Raleigh, NC	**NC0010**	**RLGHNCMO**	**121 W. Morgan St.**	**B**	**43.32**	**56.68**
Charlotte,	**NC0040**	**CHRLNCCA**	**208 N.**	**B**	**44.45**	**55.55**

NC			**Caldwell St.**			
Greensboro, NC	**NC0120**	**GNBONCEU**	**100 S. Eugene St.**	**B**	**42.84**	**57.16**
Charleston, SC	**SC3460**	**CHTNSCDT**	**180 Calhoun Street**	**B**	**11.70**	**26.5/61.8**
Nashville, TN	**TN0010**	**NSVLTNMT**	**185 2nd Avenue N.**	**B**	**49.72**	**50.28**
Memphis, TN	**TN0030**	**MMPHTNMA**	**201/215 Court St.**	**A**	**64.74**	**35.26**
Knoxville, TN	**TN0070**	**KNVLTNMA**	**410 Magnolia Ave.**	**B**	**44.51**	**55.49**

2.2.4.2 BellSouth may designate the use of either a fiber optic cable or coax (i.e., DS-3 ABAM) cable, subject to the terms of this Attachment;

2.2.4.3 Such cable will be installed via the shortest practical route between the BellSouth's and AT&T's equipment;

2.2.4.4 BellSouth will be responsible for the reasonably incurred installation and maintenance costs for such cable;

2.2.4.5 BellSouth will have sole use of the cable unless the parties mutually agree to joint-use and to an allocation of financial responsibility and an apportionment of the facility capacity of the cable; and

2.2.4.6 No other charges shall apply to BellSouth's use of the facilities over such arrangement.

2.2.5 Commercial Intra-building Interconnection – where both Parties have constructed broadband facilities into a commercial building (i.e., a building that is not a telephone central office) and agree to establish a POI at such location utilizing intra-building cable.

2.2.6 "Fiber Meet" is an interconnection arrangement whereby the Parties physically interconnect their networks via an optical fiber interface (as opposed to an electrical interface), at which one Party's facilities, provisioning, and maintenance responsibility begins and the other Party's responsibility ends (i.e., POI). A Fiber Meet shall be an arrangement as set forth in Section 2.3 of this Attachment 3.

2.2.7 Any other method determined to be technically feasible and requested by BellSouth and agreed to by AT&T shall be done.

2.3 Mid-Span Fiber Meet

2.3.1 If AT&T elects to establish a POI with BellSouth pursuant to a Mid-Span Fiber Meet, AT&T and BellSouth shall jointly engineer and operate a Synchronous Optical Network ("SONET") transmission system by which they shall interconnect their transmission and routing of local traffic via a Local Channel facility at either the DS0, DS1, or DS3 or mutually agreed upon OC-n interface) level and shall be ordered via an Access Services Request (“ASR”) in the initial phase of this offering. The Parties shall work jointly to determine the specific transmission system. The parties will work cooperatively to establish joint access to transmission overhead signals and commands for such facilities and software. However, AT&T’s SONET transmission must be compatible with BellSouth’s equipment in the serving wire center. The Parties will work cooperatively in the selection of compatible transmission equipment and software. Mid-Span Fiber Meet will be used for the provision of two-way trunking unless otherwise agreed to by the Parties.

2.3.2 The Parties shall provision any Mid-Span Fiber Meet by initially allocating the use of the facilities equally, with half the facility channels allotted to the use of AT&T, and half of the facility channels allotted to the use of BellSouth. Neither Party shall take any action that is likely to impair or interfere with the other Party’s use of its allotted facilities.

2.3.3 Either Party may purchase transport capacity on the Mid-Span Fiber Meet arrangement allotted to the other Party when the other Party has spare capacity. Spare capacity shall mean an existing unused DS3 facility between the Mid-Span Fiber Meet fiber optic terminals that the providing Party does not plan to use within the next twelve months immediately following the request for spare capacity. A Party must respond to a request for spare capacity from the other Party within ten (10) business days notifying the other Party whether the spare capacity exists. If spare capacity is available, the providing Party shall provision the spare capacity within thirty (30) business days from the date of the request if no significant equipment hardware and/or software additions or changes are required. If significant hardware and/or software additions or changes are required, the providing Party shall provision the spare capacity within a commercially reasonable time frame using commercially reasonable efforts to minimize the amount of time required to effectuate such required additions or changes, but in no event later than one hundred twenty (120) business days from the date of the request. After provisioning of the spare capacity used for Reciprocal Compensation Traffic is completed, the Party receiving the spare capacity may place orders for services using that spare capacity. Once orders are submitted by the Party receiving the spare capacity, the standard provisioning intervals will apply based on the types of services requested, provided that all necessary facilities beyond the Mid-Span Fiber Meet fiber optic terminals are available. The rate charged by one Party to the other Party for such spare capacity shall be no more than the rates set forth in this Attachment for Dedicated Transport.

2.3.4 BellSouth shall, wholly at its own expense, procure, install and maintain the agreed upon SONET equipment in the BellSouth Serving Wire Center ("BSWC").

2.3.5 AT&T shall, wholly at its own expense, procure, install and maintain the agreed upon SONET equipment in the AT&T Serving Wire Center ("ASWC").

2.3.6 The parties shall mutually agree upon a POI outside of the BSWC as a Fiber Meet point and shall make all necessary preparations to receive and to allow and enable delivery of fiber optic facilities into the POI with sufficient spare length to reach the POI. A Common Language Location Identification ("CLLI") code will be established for each POI. The code established must be a building type code. All orders shall originate from the POI (i.e., POI to AT&T, POI to BellSouth).

2.3.7 The Parties shall deliver and maintain their own strands wholly at their own expense. Upon verbal request by either Party, the other Party shall allow access to the Fiber Meet entry point for maintenance purposes as promptly as possible.

2.3.8 The Parties shall jointly coordinate and undertake maintenance of the SONET transmission system. Each Party shall be responsible for maintaining the components of their own SONET transmission system.

2.3.9 Each Party will be responsible for (i) providing its own transport facilities to the Fiber Meet, and (ii) the cost to build-out its facilities to such Fiber Meet. Each Party is responsible for transporting its originating traffic to the appropriate POI . The originating Party shall provide or cause to be provided any transport needed to deliver its originating traffic to any such POI that is not within the same serving wire center as the Mid-Span Fiber Meet terminal equipment. The Parties will utilize one of the interconnection methods set forth in this Attachment, as applicable, for any such additional transport.

2.3.10 Neither Party shall charge the other for its portion of the Fiber Meet facility between the ASWC and the BSWC used exclusively for the other Party's local traffic (i.e., the Local Channel). The Parties do not intend to utilize this arrangement for transit traffic.

2.3.11 In establishing a Mid-Span Fiber Meet arrangement and associated interconnection trunking, or an augment to such an arrangement the Parties agree to work together on routing, determining the appropriate facility system size (e.g., OC-n) based on the most recent traffic forecasts, equipment selection, ordering, provisioning, maintenance, repair, testing, augment, and compensation procedures and arrangements, reasonable distance limitations, and on any other arrangements necessary to implement the Mid-Span Fiber Meet arrangement and associated interconnection trunking ("Implementation Provisions"). The Implementation Provisions shall be agreed to by the Parties in writing at the initial implementation meeting. If, despite the Parties good faith efforts, the Parties cannot agree on material terms relating to the Implementation Provisions, the dispute resolution provisions of Section 16 (General Terms and Conditions) of this Agreement shall apply. If the material dispute relates solely to compensation procedures and arrangements, unless otherwise mutually agreed, in order to delay the mid-span activation date required under this Section, a stay of the timeframe must be obtained from the Commission. The activation date for a Mid-Span Fiber Meet arrangement or an augment to such arrangement, shall be established as follows: (i) the Mid-Span Fiber Meet facilities shall be activated within 120

days from the initial implementation meeting which shall be held within 10 business days of the receipt by BellSouth of AT&T's complete and accurate response to the BellSouth Mid-Span Fiber Meet questionnaire or some mutually agreed upon interval and (ii) the provisioning for the DS3 facilities and the trunk groups up to 10 new trunk groups or 1440 switched trunks, within 60 business days or some mutually agreed upon interval after the Mid-Span Meet facility system is activated . Intervals for quantities of trunks greater than the specified limits shall be negotiated by the Parties. The timeframes specified in this section are contingent upon AT&T's completing its milestones agreed to at the initial implementation meeting on time. If AT&T obtains dark fiber from a third party for its portion of the fiber optic cable, AT&T shall use reasonable efforts to ensure that the third-party provider does not unreasonably delay BellSouth's efforts to complete the interconnection by the deadline. Any Mid-Span Fiber Meet arrangement where the fiber-meet location will be located at a third-party premises is expressly conditioned on the Parties having sufficient fiber optic cable capacity at the requested location to meet such request, each Party having unrestricted 24-hour access to the requested location, and on other appropriate protections as reasonably deemed necessary by either Party, and on an appropriate commitment that such access and other arrangements will not be changed or altered.

2.3.12 Upon a reasonable written request by either Party, the Parties shall augment the Mid-Span Fiber Meet as soon as reasonably practicable. The cost and usage of the additional capacity will be allocated in accordance with Section 2.3. An augment request shall not be considered reasonable if the other Party has sufficient spare capacity that it would provide to the requesting Party in accordance with Section 2.3.

2.3.13 Unless the Parties otherwise mutually agree, the SONET data control channel will be disabled.

3 Interconnection Trunking and Routing

3.1 The Parties will use the following interconnection standards:

3.1.1 The Parties agree to establish Binary 8 Zero Sum Extended Superframe line protocol, where technically feasible.

3.1.2 In those cases where either Party's equipment will not support 64K Clear Channel Capability ("CCC"), the Parties agree to establish AMI line coding. Any AMI line coding will be Superframe formatted. Except where multiplexing, DS3 facilities will be provisioned with C-bit parity. Where additional equipment is required, such equipment shall be obtained, engineered, and installed to support 64K CCC trunks.

3.1.3 All interconnection facilities between the Parties will be sized according to mutual forecasts developed per the requirements of Section 4.14 of this Attachment 3 and sound engineering practices.

3.1.4 With respect to the POI selected for the delivery of AT&T's traffic, AT&T may (1) designate either a DS-1 or DS-3 interface at any POI location, (2) designate an OC-3, OC-

12, OC-24 or OC-48 interface for any POI located at an BellSouth tandem or facility hubbing location, or (3), with the mutual agreement of the Parties, select another technically feasible interface (e.g., STS-1). If the POI selected for the delivery of BellSouth's traffic is different than the AT&T POI location, then the Parties will mutually agree to the applicable interface for BellSouth's traffic.

3.2 **Trunking Arrangements**

3.2.1 **Local Tandem Interconnection**. This interconnection arrangement allows AT&T to establish interconnection trunk group(s) at BellSouth local tandems for: (1) the delivery of AT&T-originated Reciprocal Compensation traffic transported and terminated by BellSouth to BellSouth end offices within the local calling area as defined in BellSouth's General Subscriber Services Tariff, Section A3 served by those BellSouth local tandems; and (2) for local transit traffic transported by BellSouth for third party network providers who have also established an interconnection trunk group(s) at those BellSouth local tandems.

3.2.1.1 When a specified local calling area is served by more than one BellSouth local tandem, AT&T must designate a "home" local tandem for each of its assigned NPA/NXXs and establish trunk connections to such local tandems. Additionally, AT&T may choose to establish an interconnection trunk group(s) at the BellSouth local tandems where it has no codes homing but is not required to do so. AT&T may deliver local traffic to a "home" BellSouth local tandem that is destined for other BellSouth or third party network provider end offices subtending other BellSouth local tandems in the same local calling area where AT&T does not choose to establish an interconnection trunk group(s). It is AT&T's responsibility to enter its own NPA/NXX local tandem homing arrangements into the LERG either directly or via a vendor in order for other third party network providers to determine appropriate traffic routing to AT&T's codes. Likewise, AT&T shall obtain its routing information from the LERG.

3.2.1.2 Not withstanding establishing interconnection trunk group(s) to BellSouth's local tandems, AT&T must also establish an interconnection trunk group(s) to BellSouth access tandems within the LATA on which AT&T has NPA/NXX's homed for the delivery of Interexchange Carrier Switched Access ("SWA") and toll traffic, and traffic to Type 2A CMRS connections located at the access tandems. BellSouth cannot switch SWA traffic through more than one BellSouth access tandem. SWA, Type 2A CMRS or toll traffic routed to the local tandem in error will not be backhauled to the BellSouth access tandem for completion. (Type 2A CMRS interconnection is defined in BellSouth's General Subscriber Services Tariff, Section A35.)

3.2.1.3 BellSouth shall pass transit traffic to other third party network providers subtending these local tandems. However, AT&T shall be responsible directly to that third party for all reciprocal compensation obligations.

3.2.2 BellSouth and AT&T, upon mutual agreement, shall establish interconnection trunk groups and trunking configurations between networks including the establishment of one-way or two-way trunks in accordance with Exhibits C-F of this Attachment 3, attached hereto and incorporated herein by this reference and pursuant to Section 3.16.

3.2.3 Except as otherwise provided in Section 1.9-1.9.2, all terms and conditions, as well as charges, both non-recurring and recurring, associated with interconnection trunk groups between BellSouth and AT&T not addressed in Exhibit A shall be as set forth in the appropriate Party's intrastate or interstate tariff for switched access services. For two-way trunking that carries the Parties' Reciprocal Compensation traffic, excluding transit traffic, the Parties shall be compensated for the nonrecurring and recurring charges for trunks and DS1 facilities at 50% of the applicable contractual or tariff rates for the services provided by each Party. AT&T shall be responsible for ordering and paying for any two-way trunks carrying transit traffic.

3.3 All originating toll free service calls for which the end office Party performs the SSP function, if delivered to the tandem Party, shall be delivered by the end office Party using GR-394 CORE format for IXC bound calls, or using GR-317-CORE format for LEC bound calls.

3.4 Originating Feature Group B calls delivered to either Party's tandem shall use GR-317-CORE signaling format unless the associated FGB carrier employs GR-394-CORE signaling for its FGB traffic at the serving access tandem.

3.5 The Parties shall deliver over any trunk groups groomed for a specific access tandem only traffic destined for those publicly-dialable NPA NXX codes served by: (1) end offices that directly subtend the access tandem; and (2) those providers (including, but not limited to CMRS providers, other independent LECs, and CLECs) that directly connect to the access tandem.

3.6 The Parties shall establish one-way or two-way, as requested by AT&T, combined-use FG-D trunks on which AT&T may combine originating Reciprocal Compensation Traffic with Exchange Access Traffic on Feature Group B and D exchange access trunks AT&T obtains from BellSouth. AT&T will report to BellSouth the factors necessary for proper billing of such combined traffic as set forth in this Attachment. Where AT&T utilizes Feature Group B and D exchange access trunks to deliver Reciprocal Compensation Traffic with Exchange Access Traffic to BellSouth, BellSouth shall establish separate one-way trunk group(s) (or a two-way group used to carry traffic one way) to deliver Reciprocal Compensation Traffic to AT&T. BellSouth will use or establish a POI for such trunk group in accordance with Section 1.5 of this Attachment.

3.7 For BellSouth end offices that do not normally subtend tandem for which calls are routed to that end office on an alternate routing basis, BellSouth will provide AT&T its alternative

routing (scheme) arrangements. Where BellSouth utilizes alternative arrangements, it shall deliver any traffic through that alternative routing.

3.8 The Parties shall deliver over any trunk groups groomed for a specific end office only traffic destined for those publicly-dialable NPA NXX codes served by that end office, unless otherwise agreed to by the Parties.

3.9 The source for the routing information for all traffic shall be the LERG, unless otherwise agreed to between the Parties.

3.10 Where either Party delivers over the local traffic trunk groups miscellaneous calls (e.g., time, weather, 976) destined for the other Party, it shall deliver such traffic in accordance with the serving arrangements defined in the LERG.

3.11 The Parties will cooperate to establish separate, choke trunk groups for the completion of calls to customers such as radio contest lines. Notwithstanding the foregoing, the Parties agree that where the Parties' switch has the capability to perform call gapping and other protective network traffic management controls, separate trunk groups shall not be required to carry such traffic.

3.12 N11 code traffic shall be routed between the Parties' networks pursuant to accepted industry practice (e.g., over local traffic trunks or over separate trunk groups).

3.13 Each Party shall establish procedures whereby its operator bureau will coordinate with the operator bureau of the other Party in order to provide Busy Line Verification/Busy Line Verification Interrupt ("BLV/BLVI") services on calls between their respective line side end users. BLV and BLVI inquiries between operator bureaus shall be routed over the BLV/BLVI trunk groups(s) using network routable access codes published in the LERG. Nothing herein requires either party to provide BLV/BLVI to its respective end user customers.

3.14 With respect to trunk groups for Reciprocal Compensation Traffic, the originating Party shall be responsible for overall coordination, installation, and maintenance responsibilities for these trunks and trunk groups as more fully described in this Attachment. With respect to trunk groups for Meet Point Billing Traffic and Transit Traffic, AT&T is responsible for the overall coordination, installation, and maintenance responsibilities for those trunks and trunk groups as more fully described in this Attachment.

3.15 A design blocking standard of one-half of one percent (.005) shall be maintained during the average busy hour for final trunk groups carrying jointly provided exchange access traffic between an end office and an access tandem. All other final trunk groups are to be engineered with a design blocking standard of one percent (.01). High usage trunk groups shall be sized to an economic CCS parameter mutually agreed to by both Parties.

3.15.1 To ensure blocking standards are being met, BellSouth agrees to provide upon request of AT&T, the following information on all trunks, regardless of the type of traffic being transported: the number of trunk groups in the network, number of groups with valid measurements, number of trunk groups exceeding the Measured Blocking Threshold for one or three months, and the number of trunk groups exceeding the Design Blocking Threshold for three months. Trunk groups exceeding the Measured Blocking Threshold are listed with an explanatory reason.

3.15.2 Pursuant to Attachment 9, incorporated herein by this reference, BellSouth shall report to AT&T information regarding blocking of interconnection traffic.

3.16 The Parties agree to jointly manage the capacity of interconnection trunk groups to encourage the economic deployment of increasingly robust and diverse interconnection between their networks.

3.17 **BellSouth Access Tandem Interconnection Architectures**

3.17.1 BellSouth Access Tandem Interconnection provides intratandem access to subtending end offices. AT&T may choose which type of trunking architecture to use from the trunking architectures described in this Attachment 3. However, if both Parties' originated Reciprocal Compensation traffic is utilizing the same two-way trunk group, the Parties shall mutually agree to use this type of two-way interconnection trunk group with the quantity of trunks being mutually determined and the provisioning being jointly coordinated. Furthermore, the IP(s) for two-way interconnection trunk groups transporting both Parties Reciprocal Compensation traffic shall be mutually agreed upon. AT&T shall order such two-way trunks via the Access Service Request ("ASR") process in place for Local Interconnection upon determination by the Parties, in a joint planning meeting, that such trunk groups shall be utilized. BellSouth will use the Trunk Group Service Request ("TGSR") to request changes in trunking. Both Parties reserve the right to issue ASRs, if so required, in the normal course of business. Furthermore, the Parties shall jointly review such trunk performance and forecasts on a periodic basis. The Parties use of two-way interconnection trunk groups for the transport of Reciprocal Compensation traffic between the Parties does not preclude either Party from establishing additional one-way interconnection trunks for the delivery of its originated Reciprocal Compensation Traffic to the other Party. Any AT&T interconnection request that deviates from the interconnection trunk group architectures as described in this Agreement that affects traffic delivered to AT&T from a BellSouth switch that requires special BellSouth switch translations and other network modifications will require AT&T to submit a Bona Fide Request/New Business Request ("BFR/NBR") via the BFR/NBR Process set forth in this Agreement.

3.18 Standard Trunking Interconnection

3.18.1 In this interconnection architecture AT&T's originating Reciprocal Compensation and originating and terminating Transit Traffic is transported on a single two-way trunk group between AT&T and BellSouth access tandem(s) within a LATA. This group carries intratandem Transit Traffic between AT&T and Independent Companies, Interexchange Carriers, other CLECs and other network providers with which AT&T desires interconnection and has the proper contractual arrangements. This group also carries AT&T originated intertandem traffic transiting a single BellSouth access tandem destined to third party tandems such as an Independent Company tandem or other CLEC tandem. BellSouth originated Reciprocal Compensation Traffic is transported on a single one-way trunk group terminating to AT&T. The Two-way Trunking Rules, described in this Agreement, do not apply to this architecture. Other trunk groups for operator services, directory assistance, emergency services and intercept may be established if requested by AT&T. The LERG should be referenced for current routing and tandem serving arrangements. The Standard Trunking Interconnection architecture is illustrated in Exhibit C.

3.19 One Way Trunking Interconnection

3.19.1 In this arrangement, the Parties interconnect using two one-way trunk groups. One one-way trunk group carries AT&T-originated Reciprocal Compensation Traffic destined for BellSouth end-users. The other one-way trunk group carries BellSouth-originated Reciprocal Compensation Traffic destined for AT&T end-users. A third two-way trunk group is established for AT&T's originating and terminating Transit Traffic. This group carries intratandem Transit Traffic between AT&T and Independent Companies, Interexchange Carriers, other CLECs and other network providers with which AT&T desires interconnection and has the proper contractual arrangements. This group also carries AT&T originated intertandem traffic transiting a single BellSouth access tandem destined to third party tandems such as an Independent Company tandem or other CLEC tandem. Other trunk groups for operator services, directory assistance, emergency services and intercept may be established if requested by AT&T. The LERG should be referenced for current routing and tandem serving arrangements. One Way Trunking Interconnection is illustrated in Exhibit D.

3.20 Two-Way Trunking Interconnection

3.20.1 Two-Way Trunking Interconnection establishes one two-way trunk group to carry Reciprocal Compensation Traffic between AT&T and BellSouth. To establish this type of configuration, AT&T and BellSouth must agree to the Two-way Trunking Rules. In addition, a two-way transit trunk group must be established for AT&T's originating and terminating Transit Traffic. This group carries intratandem Transit Traffic between AT&T and Independent Companies, Interexchange Carriers, other CLECs and other network providers with which AT&T desires interconnection and has the proper contractual arrangements. This group also carries AT&T originated intertandem traffic transiting a single BellSouth access tandem destined to third party tandems such as an Independent Company tandem or other CLEC tandem.

Other trunk groups for operator services, directory assistance, emergency services and intercept may be established if requested by AT&T. The LERG should be referenced for current routing and tandem serving arrangements. Two-Way Trunk Interconnection is illustrated in Exhibit E.

3.21 Supergroup Interconnection

3.21.1 In the Supergroup Interconnection arrangement, the Parties Reciprocal Compensation and AT&T's Transit Traffic is exchanged on a single two-way trunk group between AT&T and BellSouth. AT&T and BellSouth must agree to the Two-way Trunking Rules in order to establish this architecture. This group carries intratandem Transit Traffic between AT&T and Independent Companies, Interexchange Carriers, other CLECs and other network providers with which AT&T desires interconnection and has the proper contractual arrangements. This group also carries AT&T originated intertandem traffic transiting a single BellSouth access tandem destined to third party tandems such as an Independent Company tandem or other CLEC tandem. Other trunk groups for operator services, directory assistance, emergency services and intercept may be established if requested. The LERG should be referenced for current routing and tandem serving arrangements. Supergroup Interconnection is illustrated in Exhibit F.

3.22 **BellSouth End Office Interconnection**

3.22.1 A&T may establish interconnection at BellSouth end offices for the delivery of AT&T originated Reciprocal Compensation Traffic destined for BellSouth end-users served by that end-office.

3.22.2 When end office trunking is ordered by BellSouth to deliver BellSouth originated traffic to AT&T, BellSouth will provide overflow routing through BellSouth tandems consistent with how BellSouth overflows it's traffic. The overflow will be based on the homing arrangements AT&T displays in the LERG. Likewise, if AT&T interconnects to a BellSouth end office for delivery of AT&T originated traffic, AT&T will overflow the traffic through the BellSouth tandems based on the BellSouth homing arrangements shown in the LERG.

3.22.3 The Parties shall utilize direct end office-to-end office trunk groups under the following conditions:

3.22.3.1 Tandem Exhaust - If a tandem through which the Parties are interconnected is unable to, or is forecasted to be unable to support additional traffic loads for any period of time, the Parties will mutually agree on an end office trunking plan that will alleviate the tandem capacity shortage and ensure completion of traffic between AT&T and BellSouth's subscribers.

3.22.3.2 Traffic Volume –To the extent either Party has the capability to measure the amount of traffic between an AT&T switching center and a BellSouth end office, either Party shall install and retain direct end office trunking sufficient to handle

actual or reasonably forecasted traffic volumes, whichever is greater, between an AT&T switching center and a BellSouth end office where the traffic exceeds or is forecasted to exceed a single DS1 of Local Traffic during the time consistent busy hour (as measured utilizing the day-to-day variation and peakedness) per month over a period of three (3) consecutive months. Either Party will install additional capacity between such points when overflow traffic between AT&T's switching center and BellSouth's end office exceeds or is forecasted to exceed a single DS1 of Local Traffic during the time consistent busy hour (measured utilizing the day-to-day variation and peakedness) per month. In the case of one way trunking, additional trunking shall only be required by the Party whose trunking has achieved the preceding usage threshold.

3.22.3.3 Mutual Agreement - The Parties may install direct end office trunking upon mutual agreement in the absence of conditions (1) or (2) above and agreement will not unreasonably be withheld.

4 NETWORK DESIGN AND MANAGEMENT FOR INTERCONNECTION

4.1 Network Management and Changes. Both Parties will work cooperatively with each other to install and maintain the most effective and reliable interconnected telecommunications networks, including but not limited to, the exchange of toll-free maintenance contact numbers and escalation procedures. Both Parties agree to provide public notice of changes in the information necessary for the transmission and routing of services using its local exchange facilities or networks, as well as of any other changes that would affect the interoperability of those facilities and networks.

4.2 Interconnection Technical Standards. The interconnection of all networks will be based upon accepted industry/national guidelines for transmission standards and traffic blocking criteria. Interconnecting facilities shall conform, at a minimum, to the technical specifications set forth in the applicable industry standard technical references. Signal transfer point, Signaling System 7 ("SS7") connectivity is required at each interconnection point. BellSouth will provide out-of-band signaling using Common Channel Signaling Access Capability where technically and economically feasible, in accordance with the technical specifications set forth in the applicable industry standard technical references. Facilities of each Party shall provide the necessary on-hook, off-hook answer and disconnect supervision and shall hand off calling number ID (Calling Party Number) when technically feasible.

4.3 Quality of Interconnection. The local interconnection for the transmission and routing of telephone exchange service and exchange access that each Party provides to each other will be at least equal in quality to what it provides to itself and any subsidiary or affiliate, where technically feasible, or to any other Party to which each Party provides local interconnection.

4.4 Common Channel Signaling.

4.4.1 **Signaling**

4.4.1.1 BellSouth shall offer access to signaling and access to BellSouth's signaling databases at the rates set forth in Attachment 3. Available signaling elements include signaling links, signal transfer points and service control points. Signaling functionality will be available with both A-link and B-link connectivity.

4.4.1.2 When AT&T purchases unbundled local switching from BellSouth, BellSouth must provide AT&T with unbundled access to BellSouth's signaling network at no additional charge or network infrastructure requirement. Where AT&T is a facilities based carrier looking to purchase access to BellSouth's signaling network, AT&T shall purchase the appropriate network components from BellSouth at a market-based rate.

4.4.1.3 When AT&T provides its own signaling or obtains signaling service from a third party provider, BellSouth is obliged to provide seamless interconnection between its signaling network and that of AT&T or the alternative supplier(s).

4.4.1.4 Signaling Link Transport

4.4.1.4.1 Signaling Link Transport is a set of two (2) or four (4) dedicated 56 kbps transmission paths between AT&T designated Signaling Points of Interconnection that provide appropriate physical diversity.

4.4.2 **SS7**

4.4.2.1 When technically feasible and upon request by AT&T, SS7 AIN Access shall be made available in association with switching. SS7 AIN Access is the provisioning of AIN 0.1 triggers in an equipped BellSouth local switch and interconnection of the BellSouth SS7 network with AT&T's SS7 network to exchange TCAP queries and responses with a AT&T SCP.

4.4.2.2 SS7 AIN Access shall provide AT&T SCP access to an equipped BellSouth local switch via interconnection of BellSouth's SS7 and AT&T SS7 Networks. BellSouth shall offer SS7 AIN Access through its STPs. If BellSouth requires a mediation device on any part of its network specific to this form of access, BellSouth must route its messages in the same manner. The interconnection arrangement shall result in the BellSouth local switch recognizing the AT&T SCP as at least at parity with BellSouth's SCPs in terms of interfaces, performance and capabilities.

4.4.2.3 **Interface Requirements**

4.4.2.3.1 BellSouth shall provide the following STP options to connect AT&T or AT&T designated local switching systems to the BellSouth SS7 network:

4.4.2.3.2 An A-link interface from AT&T local switching systems; and,

4.4.2.3.3 A B-link interface from AT&T local STPs.

4.4.2.3.4 Each type of interface shall be provided by one or more layers of signaling links.

4.4.2.4 The Signaling Point of Interconnection for each link shall be located at a cross-connect element in the CO where the BellSouth STP is located. There shall be a DS1 or higher rate transport interface at each of the SPOIs. Each signaling link shall appear as a DS0 channel within the DS1 or higher rate interface.

4.4.2.5 BellSouth shall provide intraoffice diversity between the SPOI and BellSouth STPs so that no single failure of intraoffice facilities or equipment shall cause the failure of both B-links in a layer connecting to a BellSouth STP.

4.4.2.6 STPs shall provide all functions of the MTP as defined in the applicable industry standard technical references.

4.4.3 **Message Screening**

4.4.3.1 BellSouth shall set message screening parameters so as to accept valid messages from AT&T local or tandem switching systems destined to any signaling point within BellSouth's SS7 network where the AT&T switching system has a valid signaling relationship.

4.4.3.2 BellSouth shall set message screening parameters so as to pass valid messages from AT&T local or tandem switching systems destined to any signaling point or network accessed through BellSouth's SS7 network where the AT&T switching system has a valid signaling relationship.

4.4.3.3 BellSouth shall set message screening parameters so as to accept and pass/send valid messages destined to and from AT&T from any signaling point or network interconnected through BellSouth's SS7 network where the AT&T SCP has a valid signaling relationship.

4.4.4 **Service Control Points (SCP)/Databases**

4.4.4.1 Call Related Databases provide the storage of, access to, and manipulation of information required to offer a particular service and/or capability. BellSouth shall provide access to the following Database: Automatic Location Identification/Data Management System. BellSouth also provides access to Service Creation Environment and Service Management System (SCE/SMS) application databases and Directory Assistance.

4.4.4.2 If AT&T chooses to gain access to BellSouth's call related databases, it may do so by connecting to BellSouth's network at the regional STP level. AT&T will not be required to connect to BellSouth's databases at each SCP.

4.4.4.3 A SCP is deployed in a SS7 network that executes service application logic in response to SS7 queries sent to it by a switching system also connected to the SS7 network. Service Management Systems provide operational interfaces to allow for

provisioning, administration and maintenance of subscriber data and service application data stored in SCPs.

4.4.5 **Technical Requirements for SCPs/Databases**

4.4.5.1 BellSouth shall provide physical access to SCPs through the SS7 network and protocols with TCAP as the application layer protocol.

4.4.5.2 BellSouth shall provide physical interconnection to databases via industry standard interfaces and protocols (e.g. SS7, ISDN and X.25).

4.4.5.3 The reliability of interconnection options shall be consistent with requirements for diversity and survivability.

4.4.6 Both Parties will provide LEC-to-LEC Common Channel Signaling (“CCS”) to each other, where available, in conjunction with all traffic in order to enable full interoperability of CLASS features and functions except for call return. All CCS signaling parameters will be provided, including automatic number identification (“ANI”), originating line information (“OLI”) calling company category, charge number, etc. All privacy indicators will be honored, and each Party will cooperate with each other on the exchange of Transactional Capabilities Application Part (“TCAP”) messages to facilitate full interoperability of CCS-based features between the respective networks. The Parties will provide all line information signaling parameters including, but not limited to, Calling Party Number, Charge Number (if it is different from calling party number), and originating line information ("OLI"). For terminating FGD, either Party will pass any CPN it receives from other carriers. All privacy indicators will be honored. Where available, network signaling information such as Transit Network Selection ("TNS") parameter (SS7 environment) will be provided by the end office Party wherever such information is needed for call routing or billing. Where TNS information has not been provided by the end office Party, the tandem Party will route originating exchange access traffic to the IXC using available translations. The Parties will follow all industry Ordering and Billing Forum (“OBF”) adopted guidelines pertaining to TNS codes.

4.4.7 BellSouth Common Channel Signaling Access Service (CCSAS) allows interconnected carriers to exchange signaling information over a communications path that is separate from the message path.

4.4.8 The transport portion of CCSAS, commonly referred to as a signaling link, is provided via dedicated 56 kbps or higher out of band signaling connections between the AT&T signaling point of interconnection (SPOI) and BellSouth Gateway Signaling Transfer Point (GSTP).

4.4.9 The network termination point where this interconnection takes place is called the STP port termination.

4.4.10 Charges for signaling links and the STP port termination can be found in Exhibit A of Attachment 3 of this Agreement.

4.4.11 Each CCSAS signaling connection provides for two-way digital transmission at speeds of 56 kbps or higher. The connection to BellSouth GSTP pair can be made from either AT&T's signaling point (SP), which requires a minimum of two links, or from AT&T's STP pair, which requires a minimum of four links.

4.4.12 SS7 Interconnection will take place at GSTP locations as determined by BellSouth but which will in no way limit access to BellSouth signaling points within the BellSouth region.

4.4.13 The Parties will provide Common Channel Signaling (CCS) to one another, where and as available, in conjunction with all local traffic, toll traffic, meet point billing traffic, and transit traffic. The Parties will cooperate on the exchange of Transaction Capabilities Application Part (TCAP) messages to facilitate interoperability of CCS-based features between their respective networks, including all CLASS features and functions, to the extent each Party offers such features and functions to its subscribers. All CCS parameters will be provided upon request (where available), including called party number, Calling Party Number (CPN), Originating Line Information (OLI), calling party category, and Charge Number. All privacy indicators will be honored. The Parties will follow all relevant OBF adopted standards pertaining to CIC/OZZ codes.

4.4.14 Where CCS is not available, in-band multi-frequency (MF) wink start signaling will be provided. In such an arrangement, each Party will outpulse the full ten-digit telephone number of the called party to the other Party with appropriate call set-up and Automatic Number Identification (ANI) where available, at parity. The Parties will provide CCS to one another, where and as available, in conjunction with access to call related databases and Service Control Points (SCPs), including toll free databases, Line Information Database (LIDB), Calling Name (CNAM), and any other necessary databases.

4.4.15 When the Parties establish new links subject to the terms and conditions in Section 4 of this Part II-D, each Party shall provide its own STP port termination(s) and charge the other Party for the signaling links as follows:

4.4.15.1 Where the SPOI for the signaling link is at a Mid Point Meet, there shall be no compensation between the Parties for the signaling link facilities used.

4.4.15.2 Where the SPOI for the signaling link facilities is located at the BellSouth Wire Center where the signaling link facilities terminates and AT&T has furnished the interconnection facility, BellSouth will pay a monthly charge equal to one half of the AT&T-provided facility charge according to BellSouth unbundled rate element for the facility used.

4.4.15.3 Where the SPOI for the signaling link facilities is located at the AT&T Wire Center where the signaling link facilities terminate and BellSouth has furnished the interconnection facility, AT&T will pay a monthly charge equal to one half of the BellSouth-provided facility charge according to BellSouth unbundled rate element for the facility used.

4.4.16 Each party is responsible for all facility maintenance and provisioning on its side of the SPOI.

4.4.17 Implementation of new interconnection arrangements (as opposed to augmentation of existing arrangements) will include testing consistent with industry standards. Testing of SS7 interconnection shall include completion of all tests described in CCS Network Interconnection Testing documents defined by the Internetwork Interoperability Test Plan (IITP).

5. Message Screening

5.1 BellSouth shall set message screening parameters so as to accept messages from AT&T local or tandem switching systems destined to any signaling point in the BellSouth SS7 network or any network interconnected to the BellSouth SS7 network with which the AT&T switching system has a legitimate signaling relationship.

5.2 BellSouth shall set message screening parameters so as to accept messages destined to/from an AT&T local or tandem switching system or to/from an AT&T Service Control Point (SCP) from any signaling point or network interconnected to the BellSouth SS7 network with which the AT&T switching system has a legitimate signaling relationship.

6 STP Requirements

6.1 BellSouth shall provide Message Transfer Part (MTP) and Signaling Connection Control Point (SCCP) protocol interfaces in accordance with sections relevant to the MTP or SCCP in the following specifications:

6.2 Bellcore GR-905-CORE, Issue 1 [or its successor(s)] Common Channel Signaling Network Interface Specification (CCSNIS) Supporting Network Interconnection (SNI), MTP, and Integrated Services Digital Network User Part (ISDNUP).

7. SS7 Network Interconnection

7.1 SS7 Network Interconnection (see Figure 1 below) is the interconnection of AT&T Signaling Transfer Points (STPs) and AT&T local or tandem switching systems with the BellSouth STPs. This interconnection provides connectivity that enables the exchange of SS7 messages among BellSouth switching systems and databases (DBs), AT&T local or tandem switching systems and other third-party switching systems directly connected to BellSouth SS7 network.

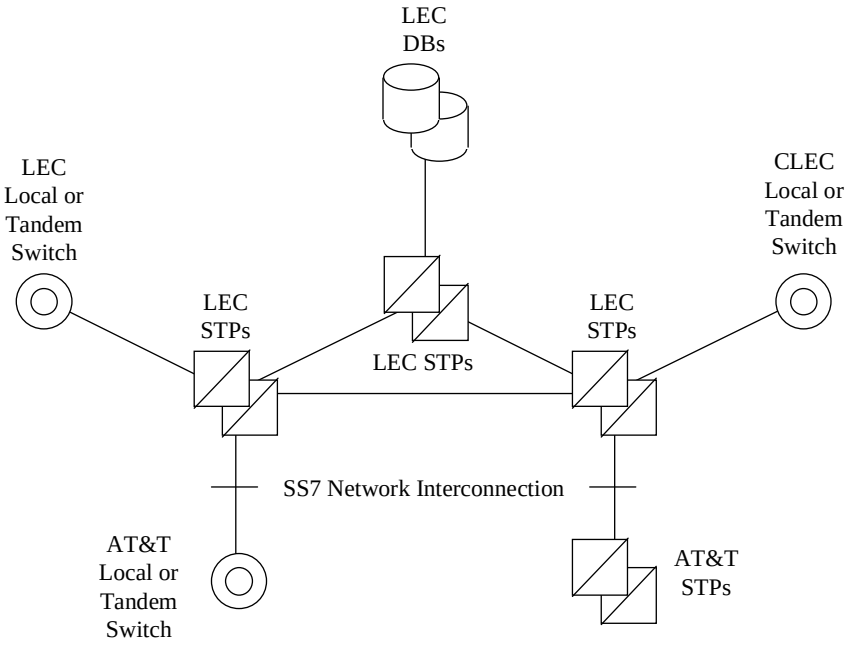

FIGURE 1. SS7 NETWORK INTERCONNECTION

7.2 SS7 Network Interconnection shall provide connectivity to all components of the BellSouth SS7 network. These include:

7.2.1 BellSouth local or tandem switching systems;

7.2.2 BellSouth DBs; and

7.2.3 Other third-party local or tandem switching systems.

7.3 The connectivity provided by SS7 Network Interconnection shall fully support the functions of BellSouth switching systems and DBs and AT&T or other third-party switching systems with direct access to the BellSouth SS7 network.

7.4 In particular Figure 2 depicts a circumstance where SS7 Network Interconnection shall provide transport for certain types of TCAP messages. If traffic is routed based on dialed or translated digits between an AT&T local switching system and a BellSouth or other third-party local switching system, either directly or via a BellSouth tandem switching system, then it is a requirement that the BellSouth SS7 network convey via SS7 Network Interconnection the TCAP messages that are necessary to provide Call Management services (Automatic callback, Automatic

Recall, and Screening List Editing) between the AT&T local STPs and the BellSouth or other third-party local switch -- assuming that there is a written agreement between AT&T and the third-party local switch.

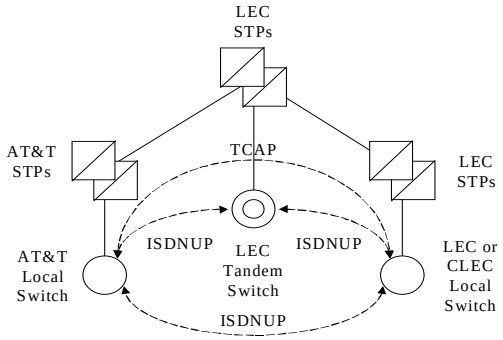

FIGURE 2 INTERSWITCH TCAP SIGNALING FOR SS7 NETWORK INTERCONNECTION

7.5 Once the capability exists to route messages based on ISNI, the Parties will mutually agree upon technically feasible routing methods consistent with applicable industry standards.

7.6 SS7 Network Interconnection shall provide:

7.6.1 Signaling Data Link functions, as specified in ANSI T1.111.2;

7.6.2 Signaling Link functions, as specified in ANSI T1.111.3; and

7.6.3 Signaling Network Management functions, as specified in ANSI T1.111.4.

7.7 SS7 Network Interconnection shall provide all functions of the SCCP necessary for Class 0 (basic connectionless) service as specified in ANSI T1.112. This includes GTT and SCCP Management procedures as specified in ANSI T1.112.4. Where the destination signaling point is a BellSouth switching system or DB, or is another third-party local or tandem switching system directly connected to the BellSouth SS7 network, SS7 Network Interconnection shall include final GTT of messages to the destination and SCCP Subsystem Management of the destination. Where the destination signaling point is an AT&T local or tandem switching system, SS7 Network Interconnection shall include intermediate GTT of messages to a gateway pair of AT&T local STPs and shall not include SCCP Subsystem Management of the destination.

7.8 SS7 Network Interconnection shall provide all functions of the Integrated Services Digital Network User Part as specified in ANSI T1.113.

7.9 SS7 Network Interconnection shall provide all functions of the TCAP as specified in ANSI T1.114.

7.10 If Internetwork MRVT and SRVT become approved ANSI standards and available capabilities of BellSouth STPs, SS7 Network Interconnection may provide these functions of the OMAP.

7.11 Interface Requirements

7.11.1 The following SS7 Network Interconnection interface options are available to connect AT&T or AT&T-designated local or tandem switching systems or signaling transfer point switches to the BellSouth SS7 network:

7.11.2 A-link interface from AT&T local or tandem switching systems; and

7.11.3 B-link interface from AT&T STPs.

7.12 The Signaling Point of Interconnection for each link shall be located at a cross-connect element in the central office where the BellSouth STP is located. There shall be a DS1 or higher rate transport interface at each of the Signaling Points of interconnection. Each signaling link shall appear as a DS0 channel within the DS1 or higher rate interface.

7.13 BellSouth shall provide intraoffice diversity between the Signaling Points of Interconnection and the BellSouth STP, so that no single failure of intraoffice facilities or equipment shall cause the failure of both B-links in a layer connecting to a BellSouth STP.

7.14 The protocol interface requirements for SS7 Network Interconnection include the MTP, ISDNUP, SCCP, and TCAP. These protocol interfaces shall conform to the applicable industry standard technical references.

7.15 BellSouth shall set message screening parameters to accept messages from AT&T local or tandem switching systems destined to any signaling point in the BellSouth SS7 network with which the AT&T switching system has a valid signaling relationship.

7.16 BellSouth shall offer the following SS7 Network Interconnection options to connect AT&T or AT&T-designated local or tandem switching systems or STPs to the BellSouth SS7 network:

7.16.1 A-link interface from AT&T local or tandem switching systems; and

7.16.2 D-link interface from AT&T STPs.

7.17 Each interface shall be provided by one or more sets (layers) of signaling links, as follows:

7.17.1 An A-link layer shall consist of two links, as depicted in Figure 3.

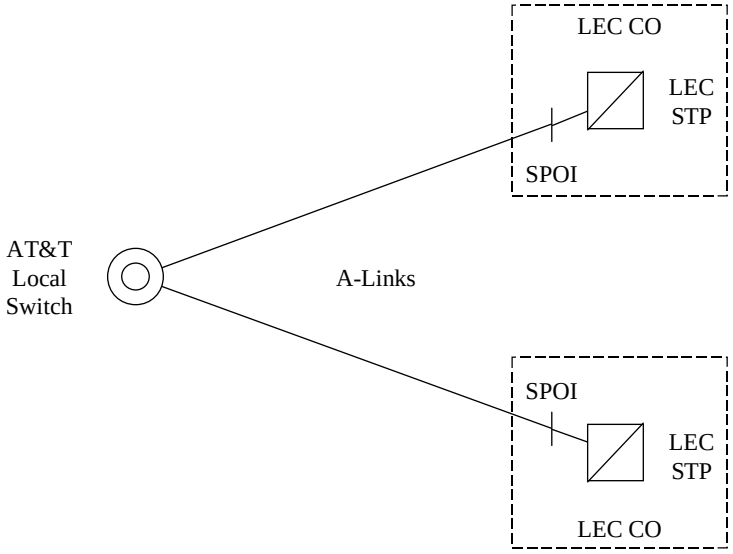

FIGURE 3. A-LINK INTERFACE

7.17.2 A D-link layer shall consist of four links, as depicted in Figure 4.

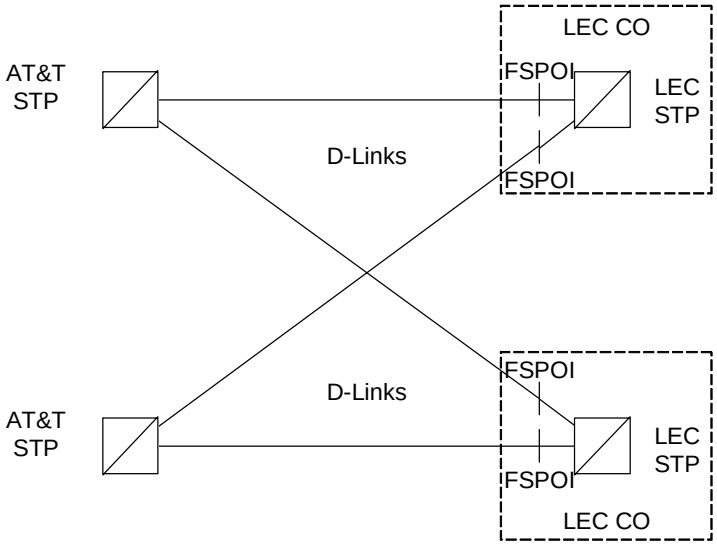

FIGURE 4. D-LINK INTERFACE

7.18 The Facilities Signaling Point of Interconnection (FSPOI) for each link shall be located at a cross-connect element, such as a DSX-1. These are located in each of BellSouth 38 LATAs. If the serving GSTP is not in the same LATA as the FSPOI, BellSouth will extend the link to the GSTP at its own expense. There shall be a DS1 or higher rate transport interface at each of the FSPOIs. Each signaling link shall appear as a DS0, or DS1 channel within the DS1 or higher rate interface. BellSouth shall offer DS1 rate signaling links for interconnecting AT&T local switching systems or STPs with BellSouth GSTPs as soon as these become approved ANSI standards and available capabilities of BellSouth GSTPs.

7.19 The Parties agree to implement intraoffice diversity for the signaling links so that no single failure of intraoffice facilities or equipment shall cause the failure of any two links in a layer connecting to one of BellSouth GSTPs.

7.20 BellSouth shall set message screening parameters to block or accept messages from AT&T local or tandem switching systems destined to any signaling point in the BellSouth SS7 network with which the AT&T switching system has a legitimate signaling relation.

7.21 **BellSouth Switched Access (SWA) 8XX Toll Free Dialing Ten Digit Screening Service**

7.21.1 The BellSouth SWA 8XX Toll Free Dialing Ten Digit Screening Service database (8XX SCP Database) is a SCP that contains customer record information and the functionality to provide call-handling instructions for 8XX calls. The 8XX SCP IN software stores data downloaded from the national SMS/8XX database and provides the routing instructions in response to queries from the SSP or tandem. The BellSouth SWA 8XX Toll Free Dialing Ten Digit Screening Service (8XX TFD Service) utilizes the 8XX SCP Database to provide identification and routing of the 8XX calls, based on the ten digits dialed. At AT&T's option, 8XX TFD Service is provided with or without POTS number delivery, dialing number delivery, and other optional complex features as selected by AT&T.

7.21.2 The 8XX SCP Database is designated to receive and respond to queries using the ANSI Specification of Signaling System Seven (SS7) protocol.

8 **Trunk Forecasting and Servicing Requirements**

8.1 The Parties agree to provide non-binding trunk forecast information to each other twice a year pursuant to the provisions of this Agreement. Each forecast provided under this Section shall be deemed "Confidential Information" under the General Terms and Conditions of this Agreement. The semi-annual forecasts shall include:

8.2 Yearly forecasted quantities of trunks for traffic that originates on or transits its network to the other network for three (current and plus 1 and plus 2) years where possible;

8.3 The use of Common Language Location Identifier, described in Bellcore documents BR 795-100-100 and BR 795-400-100 and;

8.4 A description of major network projects anticipated for the following six months. Major network projects include trunking or network rearrangements, shifts in anticipated traffic patterns, or other activities that are reflected by a significant increase or decrease in trunking demand for the following forecasting period.

8.5 In order for BellSouth to provide as accurate reciprocal trunking forecasts as possible to AT&T, AT&T must timely inform BellSouth of any known or anticipated events that may affect BellSouth reciprocal trunking requirements. If AT&T refuses to provide such information, BellSouth shall provide reciprocal trunking forecasts based only on existing trunk group growth and BellSouth's annual estimated percentage of BellSouth subscriber line growth.

8.6 The Parties agree that trunk forecasts are non-binding and are based on the information available to each respective Party at the time the forecasts are prepared. The submitting and development of interconnection trunk forecasts shall not replace the ordering process for local interconnection trunks. Unforecasted trunk demands, if any, by one Party will be accommodated by the other Party as soon as practicable based on facility availability. Each Party shall exercise its best efforts to provide the quantity of interconnection trunks mutually forecasted. However, the provision of the forecasted quantity of interconnection trunks is subject to trunk terminations and facility capacity existing at the time the trunk order is submitted. For a non binding forecast, agreement between the two Parties on the trunk quantities and the timeframe of those trunks does not imply any liability to perform if the trunks are not available for use at the required time.

8.7 With respect to two way trunks, if differences in semi-annual forecasts provided by either Party vary by more than 96 DS0 two-way trunks for each Local Interconnection Trunk Group, then the Parties shall meet to reconcile the forecast to within 96 DS0 trunks.

8.8 For BellSouth-to-AT&T one-way trunk groups ("BellSouth Trunk Groups) that are the trunk groups that do not carry overflow traffic ("Final Trunk Groups"), BellSouth and AT&T shall monitor traffic on each interconnection BellSouth Final Trunk Group that is ordered and installed. The Parties agree that the BellSouth Final Trunk Groups will be utilized at 60 percent (60%) of the time consistent busy hour utilization level within 90 days of installation. The Parties agree that the BellSouth Final Trunk Groups will be utilized at eighty percent (80%) of the time consistent busy hour utilization level within 180 days of installation. Any BellSouth Final Trunk Group not meeting the minimum thresholds set forth in this Section are defined as "Under-utilized" trunks. BellSouth may disconnect any Under-utilized BellSouth Final Trunk Groups pursuant to the provisions of Section 4.1 of this Attachment 3.

8.9 BellSouth's Carrier Interconnection Switching Center (CISC) will notify AT&T of any under-utilized BellSouth Final Trunk Groups and the number of such trunk groups that BellSouth wishes to disconnect. BellSouth will provide supporting information either by email or facsimile to the designated AT&T interface. AT&T will provide concurrence with the disconnection in fourteen (14) business days or will provide specific information supporting why the trunks should not be disconnected. If AT&T fails to provide such information, AT&T shall be considered to have concurred with BellSouth's request. Such supporting information should include expected traffic volumes (including traffic volumes generated due to Local Number Portability) and the timeframes within which AT&T expects to need such trunks. BellSouth's LISC Project Manager and Circuit Capacity Manager will discuss the information with AT&T to determine if agreement can be reached on the number of BellSouth Final Trunk Groups to be removed. If no agreement can be reached, BellSouth will issue disconnect orders to AT&T. The due date of these orders will be four weeks after AT&T was first notified in writing of the underutilization of the trunk groups.

8.10 To the extent that any interconnection trunk group is utilized at a time-consistent busy hour of eighty percent (80%) or greater, the Parties may review the trunk groups and, if necessary, shall negotiate in good faith for the installation of augmented facilities.

8.11 Each Party shall provide a specified point of contact for planning, forecasting and trunk servicing purposes.

8.12 Both Parties will manage the capacity of their interconnection trunk groups. BellSouth will issue an ASR to AT&T to order changes BellSouth desires to the BellSouth interconnection trunk groups based on BellSouth's capacity assessment. AT&T will issue an ASR to BellSouth to order changes AT&T desires to the AT&T interconnection trunk groups based on AT&T's capacity assessment.

8.13 Either Party may issue a Trunk Group Service Request ("TGSR") to the other Party to order changes it desires to the interconnection trunk groups based on its capacity assessment. The Party receiving the TGSR will, within ten (10) business days, respond with an ASR or an explanation of why it believes an ASR is inappropriate.

8.14 The Party submitting an ASR will provide complete and accurate tie down inventory assignments in typical industry bay, panel and jack format, or in such other format as the Parties agree, on each order by use of a Design Layout Record. Additional tie down information, such as span information, may be required when applicable.

8.15 The Parties will prepare ASRs pursuant to the industry standard guidelines of the OBF. When submitting an ASR, BellSouth will identify AT&T's end office in the SEC LOC field of the ASR form.

8.16 The Party provisioning the ASR will assign to the requesting Party a location code expressed in CLLI code format that will appear in the Access Customer Terminal Location Field of the ASR.

8.17 The standard interval used for the provisioning of additions to local interconnection trunk groups shall be no greater than ten (10) business days, for orders of fewer than ninety-six (96) DS-0 trunks. Other orders shall be determined on an individual case basis. Where feasible, either Party will expedite installation, upon the other Party's request.

8.18 Major projects shall be limited to those projects that require the coordination and execution of multiple orders or related activities between and among BellSouth and AT&T work groups specifically relating to: (i) the initial establishment of local interconnection trunk groups; (ii) extending service into a new area; (iii) NXX code moves; (iv) facility grooming; or (v) network rearrangements. If orders that are component pieces of a major project are submitted after project implementation has been jointly planned and coordinated, they shall be submitted with a major project reference. Several orders submitted at one time may not be classified as a major project without the consent of the submitting Party. Each Party will identify a single point of contact who will be responsible for overall coordination and management of a major project through an agreed completion point.

8.19 As provided herein, AT&T and BellSouth agree to exchange escalation lists which reflect contact personnel including vice president level officers. These lists shall include name, department, title, phone number, and fax number for each person. AT&T and BellSouth agree to exchange an up-to-date list promptly following changes in personnel or information.

9 Interference or Impairment

9.1 Within three (3) business days of receipt of notification of blocking of traffic originated within the other Party's network, the Parties shall determine and begin work to implement reasonable corrective measures in a manner consistent with industry practices.

10 Local Dialing Parity

10.1 BellSouth and AT&T shall provide local and toll dialing parity to each other with no unreasonable dialing delays. Dialing parity shall be provided for all originating telecommunications services that require dialing to route a call. BellSouth and AT&T shall permit similarly situated telephone exchange service end users to dial the same number of digits to make a local telephone call notwithstanding the identity of the end user's or the called party's telecommunications service provider.

11 NETWORK MAINTENANCE

11.1 The Parties will work cooperatively to install and maintain a reliable network. AT&T and BellSouth will exchange appropriate information (e.g., maintenance contact numbers, escalation procedures, network information, information required to comply with law enforcement and other security agencies of the Government) to achieve this desired reliability. In addition, the Parties will work cooperatively to apply sound network management principles to alleviate or to prevent congestion.

11.2 Each Party recognizes a responsibility to follow the standards that may be agreed to between the Parties and to employ characteristics and methods of operation that will not interfere with or impair the service or any facilities of the other or any third parties connected with or involved directly in the network of the other.

12 Outage Notification and Repair Standard

12.1 Planned Outages. BellSouth will use best efforts to notify AT&T of any significant planned BellSouth network outage in substantially the same time and manner as it provides notice to itself or to its End User Customers, its Affiliates, or any other party. Upon such notice, AT&T may submit a reasonable request for additional information relevant to the scheduled BellSouth network outage and BellSouth may provide such information to the extent the scheduled maintenance activity may impact AT&T and such information is reasonably necessary for AT&T to identify and analyze potential risks associated with such an outage. BellSouth may expedite or delay scheduled BellSouth network outages as a result of unscheduled maintenance or other unforeseen events. In those instances where BellSouth will not perform a scheduled network outage at the announced times, BellSouth will make best efforts to provide AT&T with as much notice as is reasonably possible concerning the changed schedule.

12.2 Unplanned Outage. For purposes of this section, a significant unplanned BellSouth network outage is defined as set forth below, which is consistent with 47 CFR 63.100, which includes but is not limited to:

12.2.1.1 An outage which potentially affects a 911 special facility is defined as a significant service degradation, switch or transport, where rerouting to the same or an alternative answering location was not implemented, and involves one or more of the following situations:

12.2.1.2 Isolation of one or more Public Service Answering Points (PSAPs) for 24 hours or more, if the isolated PSAPs collectively serve less than 30,000 or more access lines, based on the carrier's database of lines served by each PSAP; or

12.2.1.3 Loss of call processing capabilities in the E911 tandem(s), for 30 minutes or more, regardless of the number of customers affected; or

12.2.1.4 Isolation of one or more PSAP(s), for 30 or more minutes, if the isolated PSAPs collectively serve 30,000 or more access lines, based on the carrier's database of lines served by each PSAP; or

12.2.1.5 Isolation of an end office switch or host/remote cluster, for 30 minutes or more, if the switches collectively serve, 30,000 or more access lines; or

12.2.1.6 Conditions described in BellSouth's Operational Understanding Guide.

12.2.2 In accordance with BellSouth's Operational Understanding Guide, AT&T will subscribe to the email list server in order to receive email notifications on a 24X7 basis of BellSouth service disruptions that meet the criteria for FCC reportable events. BellSouth will use the same thresholds, processes and schedule for notifying AT&T as it does for internal purposes. The email notification shall consist of the same information that BellSouth provides to the FCC in reporting on an unplanned network outage. BellSouth will include all information available to BellSouth at the time such report is submitted, including but not limited to: (a) central office or offices affected; (b) OSS application or CLLI affected; (c) geographic area(s) affected; (d) description of trouble; and (e) date and time of trouble.

12.2.3 AT&T may submit a request to the BellSouth CISC for a subsequent email report, which BellSouth will provide to AT&T as soon as BellSouth has such information following such outage and no later than 30 days following the unplanned network outage.

12.2.4 As needed, AT&T may request that the Parties meet to share contact information and review BellSouth's outage restoral processes and notification processes.

12.3 Notice of Changes Section 251(c)(5)

12.3.1 If BellSouth makes a change in the information necessary for the transmission and routing of services using BellSouth's network, or any other change in its network which it believes will materially affect the interoperability of its network with AT&T's network, BellSouth shall provide at least ninety (90) days advance written notice of such change to AT&T, and shall use all reasonable efforts to provide at least one hundred eighty (180) days notice where practicable, provided, however that if a longer period of notice is required by the FCC's or Commission's rule, including, e.g., the Network Disclosure rules set forth in the FCC Regulations.

13 **Joint Network Implementation and Grooming Process.** AT&T and BellSouth shall jointly develop an implementation and grooming process which shall define and detail, inter alia,

13.1 standards to ensure that Interconnection trunk groups experience a grade of service, availability and quality which is comparable to that achieved on interoffice trunks within BellSouth's network and in accord with all appropriate relevant industry-accepted quality, reliability and availability standards. Trunks provided by either

Party for Interconnection services will be engineered using an average busy hour design blocking objective of B.01;

13.2 the respective duties and responsibilities of the Parties with respect to the administration and maintenance of the trunk groups, including, but not limited to, standards and procedures for notification and discoveries of trunk disconnects;

13.3 migration from one-way to two-way Interconnection Trunks upon mutual agreement of the Parties;

13.4 the procedures to govern any AT&T request for information concerning available BellSouth network facilities; and

13.5 additional technically feasible and geographically relevant IPs or methods of Interconnection; and

13.6 such other matters as the Parties may agree, including, e.g., End Office to End Office high usage trunks as good engineering practices may dictate.

14 Interconnection Compensation

14.1 Reciprocal Compensation includes all telecommunications traffic (including ISP-Bound Traffic as that term is defined herein) exchanged pursuant to this Agreement, other than Exchange Access Traffic as defined in Section 14.12.1 or Transit Traffic as defined in Section 18 of this Attachment. The Parties shall bill each other for all Reciprocal Compensation Traffic as set forth in Sections 14.7 et seq. except for the following types of traffic:

14.1.1 Traffic as defined in Section 14.8.1.2 of this Attachment; and

14.1.1.1 Transit Traffic as defined in Section 18 of this Attachment.

14.2 For avoidance of any doubt about the scope of Reciprocal Compensation Traffic, and without limiting the foregoing reference to “all telecommunications traffic,” the Parties agree that the following types of traffic shall be compensated as Reciprocal Compensation Traffic in accordance with this Section:

14.2.1 ISP-bound Traffic is defined as calls to an information service provider or Internet service provider (“ISP”) that are dialed by using a local dialing pattern (7 or 10 digits) by a calling party in one LATA to an ISP server or modem in the same LATA and is a subset of “information access”. Information access is defined as the provision of specialized exchange telecommunications services in connection with the origination, termination, transmission, switching, forwarding or routing of telecommunications traffic to or from the facilities of a provider of information services. ISP-bound Traffic is not Local Traffic subject to reciprocal compensation, but instead is information access traffic subject to the FCC’s jurisdiction.

14.2.2 Local Traffic, which is defined as any telephone call that originates in one exchange and terminates in either the same exchange, or other local calling area associated with the originating exchange as defined and specified in the originating Party's tariff. Additionally, Local Traffic includes any cross boundary, voice-to-voice intrastate, interLATA or interstate, interLATA calls established as a local call by the ruling regulatory body.

14.3 Nothing in this Agreement shall be construed in any way to constrain either Party's choices regarding the size of the local calling areas that it may establish for its end users.

14.4 The Parties recognize and agree that the compensation for the transport and termination of Local Traffic is intended to allow each Party to recover costs associated with such traffic. The Parties recognize and agree that such compensation will not be billed and shall not be paid for calls where a Party sets up a call, or colludes with a third party to set up a call, to the other Party's network for the purpose of receiving reciprocal compensation, and not for the purposes of providing a telecommunications service to an end user.

14.5 Transport and Termination Functions – Reciprocal compensation provides compensation for both Call Transport and Termination of the applicable traffic between the originating carrier's point of interconnection and the last point of switching. The terminating Party shall assess, and the originating party shall pay, compensation in accordance with this section. Each Party shall assess the equivalent (symmetrical) rates set forth in this Agreement for the specified transport and termination function it provides in the transport and termination of Reciprocal Compensation Traffic.

14.5.1 For purposes of this Attachment, transport is the transmission and any necessary tandem switching of telecommunications traffic subject to section Reciprocal Compensation of the Act from the interconnection point between the two carriers to the terminating carrier's end office switch that directly serves the called party, or equivalent facility provided by a carrier other than an incumbent LEC.

14.5.2 Where reciprocal Traffic is transported via a Party's dedicated trunk group, whether to an end office switch or a tandem switch, the dedicated transport rates set forth in this Agreement shall apply in addition to the applicable per minute of use rate elements. To the extent a rate associated with the dedicated transport is not set forth in Exhibit A, the rate shall be negotiated by the parties or where applicable, shall be as set forth in the appropriate Party's Commission filed and effective tariff for switched access services.

14.5.3 For purposes of this Attachment, Termination is the switching of telecommunications traffic at the terminating carrier's end office switch, or equivalent facility, and delivery of such traffic to the called party's premises.

14.6 Notwithstanding the definitions of Reciprocal Compensation Traffic above, and pursuant to the FCC's Order on Remand and Report and Order in CC Docket 99-68 released April 27, 2001 ("ISP Order on Remand"), BellSouth and AT&T agree to the rebuttable presumption that all combined circuit switched Local and ISP-bound Traffic delivered to BellSouth or AT&T that exceeds a 3:1 ratio of terminating to originating traffic on a statewide basis shall be considered ISP-bound traffic for compensation purposes. BellSouth and AT&T further agree to the rebuttable presumption that all combined circuit switched Local and ISP-bound Traffic delivered to BellSouth or AT&T that does not exceed a 3:1 ratio of terminating to originating traffic on a statewide basis shall be considered Local Traffic for compensation purposes.

14.7 With the exception of traffic set forth in Section 14.8 below, all Reciprocal Compensation Traffic that is exchanged pursuant to this Agreement shall be compensated as follows, irrespective of the transport and termination provided for the completion of such traffic:

14.7.1 Commencing on the Effective Date and continuing until the Expiration Date of this Agreement, $.0007 per minute of use.

14.7.2 For ISP-bound Traffic exchanged during the year 2004 until the Expiration Date of this Agreement, compensation on a yearly basis shall be billed by the terminating Party and paid by the originating Party on ISP-bound Traffic minutes up to a ceiling of ISP-bound minutes, which shall be calculated in accordance with the FCC's ISP Order on Remand. To calculate the ceiling on ISP bound Traffic minutes , the Parties shall first determine the total number of minutes of use of ISP Traffic (as defined in this Agreement) terminated by one Party for the other Party for the three-month period commencing January 1, 2001 and ending March 31, 2001. The Parties shall then multiply this number of minutes by 4.4, and the resulting product shall be the terminating Party's "2001 ISP Annualized Traffic Cap." The total number of minutes of use of ISP Traffic for which one Party may receive compensation from the other Party for any calendar year following the Effective Date of this Agreement shall equal 1.1 times that Party's 2001 ISP Annualized Traffic Cap.

14.7.3 No other per MOU charges shall apply to the carriage of Reciprocal Compensation Traffic by either Party for the other Party except as set forth above. Compensation for Transit Traffic shall be as set forth in this Attachment.

14.7.4 In no event shall this Agreement have any effect on the rates applicable to non-ISP Bound Traffic and ISP Bound Traffic prior to the Effective Date of this Agreement or on any claims by either Party for non-payment of such charges. The rates applicable to ISP Bound Traffic under this Agreement pursuant to the FCC ISP Order shall in no event be deemed to apply retroactively prior to the Effective Date of this Agreement.

14.8 **Exclusions from Reciprocal Compensation.**

14.8.1 Reciprocal Compensation Traffic shall not include the following types of traffic:

14.8.1.1 Exchange Access Traffic (Switched Access Traffic). Exchange Access Traffic is defined as telephone calls requiring local transmission or switching services for the purpose of the origination or termination of non-Local Intrastate IntraLATA, Intrastate InterLATA, and Interstate InterLATA traffic, with the exception of any mandatory local calling areas that cross LATA boundaries. If BellSouth or AT&T is the other Party's end user's presubscribed interexchange carrier or if an end user uses BellSouth or AT&T as an interexchange carrier on a 101XXXX basis, BellSouth or AT&T will charge the other Party the appropriate tariff charges for originating switched access services.

14.8.1.2 Traffic that originates from, or terminates to, a subscriber line that AT&T provides, where AT&T does not own, lease from a third party or otherwise provide its own switch(es).

14.8.1.3 To Transit Traffic, as defined in this Attachment of this Agreement. Transit Traffic does not include traffic originating from or terminating to AT&T customers utilizing resold BellSouth services and such traffic should be addressed consistent with Attachment 1 of this Agreement. Transit Traffic also does not include UNE-P traffic, which shall be treated consistent with Section 14.8.1.2 above. Transit Traffic shall be compensated and billed in accordance with Section 19 of this Attachment.

14.9 For the purposes of this Attachment 3, Common (Shared) Transport is defined as the transport of one Party's traffic by the other Party over the other Party's common (shared) facilities between the other Party's tandem switch and end office switch and/or between the other Party's tandem switches.

14.10 For the purposes of this Attachment 3, Tandem Switching is defined as the function that establishes a communications path between two switching offices through a third switching office through the provision of trunk side to trunk side switching.

14.11 For the purposes of this Attachment 3, End Office Switching is defined as the function that establishes a communications path between the trunk side and line side of the End Office switch.

14.12 "IP Enabled Services" includes, but is not limited to, services and applications that rely on internet protocol for all or part of the transmission of a call. IP Enabled Services could include the digital communications capabilities of increasingly higher speeds, that use a number of transmission network technologies, and that generally have in common the use of internet protocol. IP enabled applications could include capabilities based on higher-level software that can be invoked by the customer or on the customer's behalf to provide functions that make use of communications services.

14.12.1 Exchange Access Traffic includes the following category of IP Enabled Service: 1+ interLATA calls that: (1) use ordinary customer premises equipment (such as a

traditional telephone) with no enhanced functionality; (2) originate and terminate on the public switched telephone network (PSTN); (3) undergo no Net Protocol Conversion as defined in 14.12.2 below; and (4) provide no enhanced functionality to end users that result from the provider's use of IP technology. To the extent that the FCC finds that this type of IP Enabled Service is not exchange access service, or is not otherwise subject to access charges, then the Parties shall amend the Agreement in accordance with Section 9 of the General Terms and Conditions.

14.12.2 A "Net Protocol Conversion" occurs when a call originates in one protocol (e.g. IP) and terminates in another protocol (e.g. TDM).

14.12.3 For traffic that originates from a traditional telephone device and terminates to a non-telecommunications device ("Phone-to-Computer") or originates from a non-telecommunications device and terminates to a traditional telephone device ("Computer-to-Phone"), the Parties have been unable to agree as to whether Voice over Internet Protocol ("VOIP") transmissions which cross local calling area boundaries constitute Exchange Access Traffic. Notwithstanding the foregoing, and without waiving any rights with respect to either Party's position as to the jurisdictional nature of VOIP, the Parties agree to abide by any effective and applicable FCC and/or state commission rules and orders regarding the nature of such traffic and the compensation payable by the Parties for such traffic, if any.

14.13 The Parties have been unable to agree as to the appropriate compensation for calls which originate in a LATA and terminate to a physical location outside of that LATA but to a number assigned to a rate center within that LATA. However, without prejudice to either Party's position concerning the application of reciprocal compensation or access charges to such traffic, the Parties agree for purposes of this Agreement only and subject to the Parties' agreement to the terms of Sections 14.7, and on an interim basis until the FCC issues an Order addressing this issue, neither Party shall bill the other reciprocal compensation, intercarrier compensation or switched access in connection with the exchange of any traffic as described in the first sentence of this paragraph. Once the FCC issues an Effective Order addressing this issue, the Parties agree to amend this Interconnection Agreement to comply with the Order on a prospective basis only within thirty (30) days of either Party's written request. No "true-up" shall be required in connection with such an Effective Order. Nothing in this Section 5.3.4 is intended to change the way that the Parties treat ISP-bound traffic in accordance with the FCC's ISP Order on Remand.

14.14 Billing POI Compensation. If BellSouth establishes a BPOI, AT&T agrees to pay to BellSouth Interoffice Dedicated Transport and any associated Multiplexing for BellSouth to transport BellSouth's originated Local and ISP-bound Traffic over BellSouth facilities from the BPOI as described in Section 1.8.3 of this Attachment to the POI. Such Interoffice Dedicated Transport shall be priced as set forth in Exhibit A. The Interoffice Dedicated Transport mileage shall be the airline mileage between the Vertical and Horizontal ("V&H") coordinates of the BPOI and the V&H coordinates of the BellSouth POI. The Interoffice Dedicated Transport

charges for BPOI shall be billed based on the actual volume of traffic in increments of 8.9M minutes, which is a DS3 equivalent. BellSouth will not assess charges for an additional DS3 until the additional 8.9M-minute threshold is met.

14.15 Charges for Trunks and Associated Dedicated Facilities. Compensation for trunks and associated dedicated facilities shall be handled in accordance with Section 1.6-1.6.2 of this Attachment.

14.16 Percent Local Use. Each Party will report to the other a Percentage Local Usage ("PLU"). The application of the PLU will determine the amount of local minutes to be billed to the other Party. For purposes of developing the PLU, each Party shall consider every local call and every long distance call, excluding intermediary traffic. BellSouth shall report quarterly PLU factors to AT&T. BellSouth and AT&T shall also provide a positive report updating the PLU. Detailed requirements associated with PLU reporting shall be as set forth in BellSouth's Jurisdictional Reporting Factors Guide, as it is amended from time to time during this Agreement. Notwithstanding the foregoing, where the terminating company has message recording technology that identifies the traffic terminated, such information, in lieu of the PLU factor, shall at the company's option be utilized to determine the appropriate reciprocal compensation to be paid.

14.17 Percent Local Facility. Each Party shall report to the other a PLF. The application of the PLF will determine the portion of switched dedicated transport to be billed per the local jurisdiction rates. The PLF shall be applied to multiplexing, local channel and interoffice channel switched dedicated transport utilized in the provision of local interconnection trunks. Each Party shall update its PLF on the first of January, April, July and October of the year and shall send it to the other Party to be received no later than thirty (30) calendar days after the first of each such month to be effective the first bill period the following month, respectively. Requirements associated with PLU and PLF calculation and reporting shall be as set forth in BellSouth's Jurisdictional Reporting Factors Guide.

14.18 Percentage Interstate Usage. For combined interstate and intrastate AT&T traffic terminated by BellSouth over the same facilities, AT&T will be required to provide a projected Percentage Interstate Usage ("PIU") to BellSouth. All jurisdictional report requirements, rules and regulations for Interexchange Carriers specified in BellSouth's Intrastate Access Services Tariff will apply to AT&T. After interstate and intrastate traffic percentages have been determined by use of PIU procedures, the PLU factor will be used for application and billing of local interconnection. Notwithstanding the foregoing, where the terminating company has message recording technology that identifies the traffic terminated, such information, in lieu of the PLU factor, shall at the company's option be utilized to determine the appropriate reciprocal compensation to be paid.

14.19 Audits. On thirty (30) days' written notice, each Party must provide the other the ability and opportunity to conduct an annual audit of the traffic reported. BellSouth

and AT&T shall retain records of call detail for a minimum of nine months from which a PLU, PLF and/or PIU can be ascertained. The audit shall be accomplished during normal business hours at an office designated by the Party being audited. Audit requests shall not be submitted more frequently than one (1) time per calendar year. Audits shall be performed by a mutually acceptable independent auditor paid for by the Party requesting the audit. The PLU, PLF, and/or PIU shall be adjusted based upon the audit results and shall apply to the usage for the quarter the audit was completed, to the usage for the quarter prior to the completion of the audit, and to the usage for the two quarters following the completion of the audit. If, as a result of an audit, either Party is found to have overstated the PLU, PLF and/or PIU by twenty percentage points (20%) or more, that Party shall reimburse the auditing Party for the cost of the audit.

15 Toll Free Traffic

15.1 If AT&T chooses BellSouth to perform the Service Switching Point (SSP) Function (i.e., handle Toll Free database queries) from BellSouth's switches, all AT&T originating Toll Free traffic shall be delivered using either GR-394 format with Carrier Code "0110" and a mutually agreed upon Circuit Code or GR-317-CORE format as appropriate.

15.2 All post-query Toll Free calls for which AT&T performs the SSP function, if delivered to BellSouth, shall be delivered using GR-394 format for calls destined to IXCs, and GR-317 format for calls destined to end offices that directly subtend a BellSouth access tandem within the LATA.

16 **INTRALATA 8YY TRAFFIC COMPENSATION**

16.1 Where an intraLATA 8YY call originates on the physical network of one of the Parties within one exchange and terminates on the network of the other Party, (as the 8YY service provider) in either the same exchange or other local calling area associated with the originating exchange as defined and specified in the originating Party's tariff the Parties agree that the call will be identified as subject to reciprocal compensation in the same manner as provided for in Section 14 above.

16.2 The Parties will meet within 60 days of the Effective Date of this Agreement to develop a mutually acceptable process for implementing this provision.

16.3 Traffic exchanged between the Parties pursuant to Section 16.1 are billed to and paid for by the terminating 800/8YY Service Provider, regardless of which Party performs the 800 query.

16.4 Records for 8YY Billing. Each Party will provide to the other the appropriate records necessary for billing intraLATA 8YY customers. Records required for billing end users purchasing 8YY Services shall be provided pursuant to Attachment 6 of this Agreement, incorporated herein by this reference.

17 Meet Point Billing Compensation

17.1 "Meet-Point Billing" or "MPB" or "Jointly Provided Switched Access" is an arrangement whereby AT&T and BellSouth jointly provide Exchange Access Traffic service to an Interexchange Carrier ("IXC"), with each Party receiving an appropriate share of the revenues from the IXC as defined by their effective access Tariffs. AT&T and BellSouth will establish meet-point billing ("MPB") arrangements to provide a common transport option to IXCs via BellSouth's access tandem, in accordance with the MPB guidelines adopted by and contained in the Ordering and Billing Forum's MECAB and MECOD documents, except as may otherwise be modified herein. The arrangements described in this Section 9 are intended to be used to provide Exchange Access Traffic service that originates and/or terminates on a Telephone Exchange Service, as defined in Section 3 (47) of the Act that is provided by AT&T and is routed to or from an IXC interconnected to BellSouth's tandem switch.

17.2 Neither Party will assess the other charges for the provision of Exchange Access Traffic service associated with Meet Point Billing Traffic as described in Section 18.1. Each Party will provide its own access services to the IXC and bill on a multi-bill, multi-tariff meet-point basis. Each Party will bill its own access services rates to the IXC with the exception of the interconnection charge. The interconnection charge will be billed by AT&T as the Party providing the end office function. Each party will use the Multiple Exchange Carrier Access Billing (MECAB) guidelines to establish meet point billing for all applicable traffic.

18. Transit Traffic Service. BellSouth shall provide tandem switching and transport services for AT&T's Transit Traffic. Transit Traffic is traffic originating on AT&T's network that is switched and/or transported by BellSouth and delivered to a third party's network, or traffic originating on a third Party's network that is switched and/or transported by BellSouth and delivered to AT&T's network. Transit Traffic consists of local Transit Traffic and Exchange Access Transit Traffic. Rates for local Transit Traffic shall be the applicable composite rate as set forth in Exhibit A to this Attachment. Exchange Access Transit Traffic shall be meet-point billed in accordance with the BellSouth Interstate or Intrastate Switched Access tariffs. Exchange Access Transit Traffic presumes that AT&T's end office is subtending the BellSouth Access Tandem for switched access traffic to and from AT&T's end users utilizing BellSouth facilities, either by direct trunks with the IXC, or via the BellSouth Access Tandem. Billing associated with all Transit Traffic shall be pursuant to MECAB procedures. Wireless Type 1 traffic shall not be treated as Transit Traffic from a routing or billing perspective. Wireless Type 2A traffic or a third party CLEC utilizing BellSouth switching (UNE-P or resale CLEC) shall not be treated as Transit Traffic from a routing or billing perspective until BellSouth and the Wireless carrier or third party CLEC utilizing BellSouth switching (UNE-P or resale CLEC) have the capability to properly meet-point-bill in accordance with Multiple Exchange Carrier Access Billing ("MECAB") guidelines. Transit Traffic

does not include traffic originating from or terminating to AT&T end-users utilizing resold BellSouth services.

18.1 The Parties agree that AT&T will deliver any intraLATA toll traffic, as defined by reference to a terminating independent telephone companies' (ICO) local calling area, to the originating AT&T end user's intraLATA toll provider, and the originating and terminating carriers will bill originating and terminating access, as appropriate, to that toll provider. AT&T is not allowed to send its originating non-local traffic terminating to an ICO via BellSouth as Transit Traffic, but is required to deliver such traffic to the presubscribed interexchange carrier (PIC) of the originating AT&T end user. Such non-local traffic shall be any traffic that originates outside of the terminating independent telephone company's local calling area. In Georgia, the parties have already implemented the routing arrangement described above in accordance with the Georgia Transit Docket Number 16772-U. In all other states, the Parties agree to establish a seventy-five (75) day transition period, with such period beginning on the date of execution of this Agreement, to allow AT&T to implement routing changes needed to comply with this section.

18.2 Subject to the provisions set forth above, BellSouth agrees to route Transit Traffic originated by AT&T to the terminating carrier. In the event of a billing dispute between BellSouth and any third party arising from the termination of AT&T's Transit Traffic to such third party, AT&T will work cooperatively with BellSouth in determining the appropriateness of such billing and will share relevant documentation related to the billing dispute and AT&T will support the position that such third party should contact AT&T directly regarding the compensation, if any, applicable to such traffic.

18.3 Where AT&T is the terminating carrier, AT&T shall not charge BellSouth, as the transiting party, for any third party originated traffic delivered to AT&T by BellSouth. Transit Traffic is excluded from any BellSouth billing guarantees. Billing associated with all Transit Traffic shall be pursuant to MECAB guidelines. BellSouth will not be liable to AT&T or any third party for any compensation associated with the origination or termination of AT&T's Transit Traffic.

19 **911 Arrangements**

19.1 **Definition**

19.2 911 Arrangements are arrangements for routing 911 calls from AT&T Customers to the appropriate Public Safety Answering Point (PSAP), passing certain customer information for display at the PSAP answering station based on the class of 911 service (Basic 911 or E911) deployed in the area. BellSouth shall provide 911 Arrangements to AT&T in accordance with the provisions below in areas where AT&T is authorized to provide local exchange service and BellSouth is the 911 system provider. The provisions in this Attachment apply only to 911 Arrangements provided as Ancillary Functions. 911 functionality for Unbundled

Network Element Combinations and for Local Services Resale shall be governed by provisions in Attachment 2 (Unbundled Network Elements) and Attachment 1(Local Services Resale) of this Agreement. In providing 911 Arrangements to AT&T, BellSouth shall comply with all laws, rules and regulations concerning emergency services. Basic 911 and E911 functions provided to AT&T shall be at least equal in quality and functionality with the support and services that the BellSouth provides to its own retail customers for such similar functionality.

19.3 **Technical Requirements**

19.3.1 E911 Trunks, Interconnection to 911 Tandem

19.3.1.1 At AT&T's request, BellSouth and AT&T shall establish dedicated trunk groups to route E911 calls placed by AT&T Customers to the appropriate BellSouth 911 tandem or selective router. Trunks shall be established as CAMA MF trunks until SS7 connectivity is available. When SS7 connectivity is available, BellSouth shall provide written notification to AT&T of such availability Trunks shall thereafter be established with SS7 signaling, at AT&T's option.

19.3.1.1 AT&T shall order such 911 trunks and trunk groups, including trunk and trunk group augmentations, via the ASR process. A Firm Order Confirmation (FOC) shall be returned to the ordering Party, after receipt of a valid, error free ASR, within the timeframes set forth in each state's applicable Performance Measures. Notwithstanding the foregoing, blocking situations and projects shall be managed through BellSouth's Carrier Interconnection Switching Center (CISC) Project Management Group, and FOCs for such orders shall be returned in the timeframes applicable to the project. A project is defined as (1) a new trunk group or (2) a request for more than 96 trunks on a single or multiple group(s) in a given BellSouth local calling area. BellSouth shall provision 911 trunks within thirty (30) calendar days of receipt of AT&T's order or such shorter time as may be established by law, rule, regulation or Commission order. Alternatively, at its option, AT&T may provide the trunks. Regardless of which party provides the trunks. Prior to placing a trunk in service BellSouth and AT&T shall cooperate in testing to assure proper functioning of the E911 system for calls delivered over the trunk.

19.3.1.2 BellSouth shall assure sufficient capacity at the 911 tandem or selective router to meet AT&T's requests for interconnection within thirty (30) days after receipt of the request. There shall be no limit on the number of trunks used by AT&T to connect to the 911 tandem or selective router to ensure P.01 grade of service. P.01 grade of service is the minimum recommended grade of service for 911 trunk groups. Interconnection to the 911 tandem shall be established to provide path and route diversity.

19.3.2 BellSouth shall provide the following information to AT&T, and shall promptly notify AT&T of any changes:

19.3.2.1 BellSouth processes and requirements for ordering trunks for 911 trunks and interconnection to the 911 tandem or selective router.

19.3.2.2 Trunk group specifications.

19.3.2.3 E911 tandem CLLI codes, circuit IDs, point codes, LEC order number, and TS (Two Six) code and address.

19.3.2.4 Description of BellSouth's diversity for facility routing.

19.3.2.5 Maintenance procedures for 911 trunk groups, including, but not limited to, contact names and numbers, escalation lists, the hours that maintenance is available, and the 8YY number that the BellSouth provides for access to 24X7 support for 911 arrangements. BellSouth shall provide contact names and numbers, escalation lists, and the hours that maintenance is available.

20 911 Call Routing

20.1 BellSouth shall route E911 calls delivered by AT&T to BellSouth's 911 tandems or selective routers to PSAPs in the same manner that BellSouth routes E911 calls from its own retail customers.

21 Automatic Location Identification/Data Management System (ALI/ DMS)

21.1 BellSouth shall provide an electronic interface to the ALI/DMS database, through which AT&T or its agent may provide a daily update of AT&T Customer information. BellSouth shall provide AT&T with the record input format, consistent with NENA-02-001 (NENA Recommended Formats for Data Exchange). BellSouth shall provide error reports from the ALI/DMS data base to AT&T immediately after AT&T or its agent enters information into the ALI/DMS database. BellSouth shall defend and indemnify AT&T against any claims resulting from BellSouth's delay or failure in processing AT&T Customer information or providing error reports.

21.2 If an electronic interface to the ALI/DMS database is not available, BellSouth shall establish interim processes and procedures to receive and process AT&T Customer information within one (1) business day. BellSouth shall defend and indemnify AT&T against any claims resulting from errors in processing the AT&T Customer information.

21.3 BellSouth shall provide AT&T query access to the ALI/DMS database to verify the accuracy of AT&T Customer information.

LOCAL INTERCONNECTION - South Carolina

Attachment: 3 Exh: A

CATEGORY	RATE ELEMENTS	Interim	Zone	BCS	USOC	RATES($) Rec	Nonrecurring First	Nonrecurring Add'l	Nonrecurring Disconnect First	Nonrecurring Disconnect Add'l	Svc Order Submitted Elec per LSR	Svc Order Submitted Manually per LSR	Incremental Charge - Manual Svc Order vs. Electronic-1st	Incremental Charge - Manual Svc Order vs. Electronic-Add'l	Incremental Charge - Manual Svc Order vs. Electronic-Disc 1st	Incremental Charge - Manual Svc Order vs. Electronic-Disc Add'l
											OSS Rates($)					
							First	Add'l	First	Add'l	SOMEC	SOMAN	SOMAN	SOMAN	SOMAN	SOMAN
LOCAL INTERCONNECTION (CALL TRANSPORT AND TERMINATION)																
	NOTE: "bk" beside a rate indicates that the Parties have agreed to bill and keep for that element pursuant to the terms and conditions in Attachment 3.															
	Intercarrier Compensation for Local Traffic and ISP-bound Traffic															
	Single rate for Local Traffic and ISP-bound Traffic, per MOU					0.0007										
	TANDEM SWITCHING															
	Multiple Tandem Switching, per MOU (applies to intial tandem only)					0.000736										
	Local Intermediary Charge, per MOU (1/1/2006 - 12/31/2006)					0.0015										
	Local Intermediary Charge, per MOU (1/1/2007 - 12/31/2007)					0.0020										
	Local Intermediary Charge, per MOU (1/1/2008 - expiration)					0.0025										
	TRUNK CHARGE															
	Installation Trunk Side Service - per DS0			OHD	TPP6X		21.65bk	8.16bk								
	Installation Trunk Side Service - per DS0			OHD	TPP9X		21.65bk	8.16bk								
	Dedicated End Office Trunk Port Service-per DS0**			OHD	TDEOP	0.00										
	Dedicated End Office Trunk Port Service-per DS1**			OH1 OH1MS	TDE1P	0.00										
	Dedicated Tandem Trunk Port Service-per DS0**			OHD	TDWOP	0.00										
	Dedicated Tandem Trunk Port Service-per DS1**			OH1 OH1MS	TDW1P	0.00										
	**** This rate element is recovered on a per MOU basis and is included in the End Office Switching and Tandem Switching, per MOU rate elements**															
LOCAL INTERCONNECTION (DEDICATED TRANSPORT)																
	INTEROFFICE CHANNEL - DEDICATED TRANSPORT															
	Interoffice Channel - Dedicated Transport - 2-Wire Voice Grade - Per Mile per month			OHM	1L5NF	0.0167bk										
	Interoffice Channel - Dedicated Transport- 2- Wire Voice Grade - Facility Termination per month			OHM	1L5NF	24.30bk	40.63bk	27.47bk	16.77bk	6.91bk						
	Interoffice Channel - Dedicated Transport - 56 kbps - per mile per month			OHM	1L5NK	0.0167bk										
	Interoffice Channel - Dedicated Transport - 56 kbps - Facility Termination per month			OHM	1L5NK	16.76bk	40.63bk	27.47bk	16.77bk	6.91bk						
	Interoffice Channel - Dedicated Transport - 64 kbps - per mile per month			OHM	1L5NK	0.0167bk										
	Interoffice Channel - Dedicated Transport - 64 kbps - Facility Termination per month			OHM	1L5NK	16.76bk	40.63bk	27.47bk	16.77bk	6.91bk						
	Interoffice Channel - Dedicated Channel - DS1 - Per Mile per month			OH1, OH1MS	1L5NL	0.3415bk										
	Interoffice Channel - Dedicated Tranport - DS1 - Facility Termination per month			OH1, OH1MS	1L5NL	77.14bk	89.47bk	81.99bk	16.39bk	14.48bk						
	Interoffice Channel - Dedicated Transport - DS3 - Per Mile per month			OH3, OH3MS	1L5NM	8.02bk										
	Interoffice Channel - Dedicated Transport - DS3 - Facility Termination per month			OH3, OH3MS	1L5NM	880.65bk	279.37bk	163.12bk	60.33bk	58.59bk						
	LOCAL CHANNEL - DEDICATED TRANSPORT															
	Local Channel - Dedicated - 2-Wire Voice Grade per month			OHM	TEFV2	15.33bk	193.53bk	33.24bk	36.72bk	3.21bk						
	Local Channel - Dedicated - 4-Wire Voice Grade per month			OHM	TEFV4	16.54bk	193.97bk	33.68bk	37.19bk	3.68bk						
	Local Channel - Dedicated - DS1 per month			OH1	TEFHG	42.62bk	177.87bk	154.06bk	22.24bk	15.30bk						
	Local Channel - Dedicated - DS3 Facility Termination per month			OH3	TEFHJ	446.00bk	452.52bk	264.53bk	119.75bk	83.77bk						
	LOCAL INTERCONNECTION MID-SPAN MEET															
	Local Channel - Dedicated - DS1 per month			OH1MS	TEFHG	0.00	0.00									
	Local Channel - Dedicated - DS3 per month			OH3MS	TEFHJ	0.00	0.00									
	MULTIPLEXERS															
	Channelization - DS1 to DS0 Channel System			OH1, OH1MS	SATN1	107.57	91.24	62.71	10.56	9.81						
	DS3 to DS1 Channel System per month			OH3, OH3MS	SATNS	144.02	178.54	94.18	33.33	31.90						
	DS3 Interface Unit (DS1 COCI) per month			OH1, OH1MS	SATCO	8.64	6.59	4.73								
SIGNALING (CCS7)																
	NOTE:"bk" beside a rate indicates that the parties have agreed to bill and keep for that element pursuant to the terms and conditions in Attachment 3.															
	CCS7 Signaling Connection, Per 56Kbps Facility A-Link DS1			UDB	TPP6A	16.93	35.61	35.61	16.48	16.48						
	CCS7 Signaling Connection, Per 56Kbps Facility A-Link DS3			UDB	TPP9A	16.93	35.61	35.61	16.48	16.48						
	CCS7 Signaling Connection, Per 56Kbps Facility B-Link DS1			UDB	TPP6B	16.93	35.61	35.61	16.48	16.48						
	CCS7 Signaling Connection, Per 56Kbps Facility B-Link DS3			UDB	TPP9B	16.93	35.61	35.61	16.48	16.48						
	CCS7 Signaling Connection, Switched access service, interface groups, transmissiom paths 6 DS1 level path with bit stream signaling			UDB	TPP6X	16.93	35.61	35.61	16.48	16.48						

LOCAL INTERCONNECTION - South Carolina

Attachment: 3 Exh: A

CATEGORY	RATE ELEMENTS	Interim	Zone	BCS	USOC	RATES($)					Svc Order Submitted Elec per LSR	Svc Order Submitted Manually per LSR	Incremental Charge - Manual Svc Order vs. Electronic-1st	Incremental Charge - Manual Svc Order vs. Electronic-Add'l	Incremental Charge - Manual Svc Order vs. Electronic-Disc 1st	Incremental Charge - Manual Svc Order vs. Electronic-Disc Add'l
						Rec	Nonrecurring		Nonrecurring Disconnect		OSS Rates($)					
							First	Add'l	First	Add'l	SOMEC	SOMAN	SOMAN	SOMAN	SOMAN	SOMAN
	CCS7 Signaling Connection, Switched access service, interface groups, transmissiom paths 9 DS3 level path with bit stream signaling			UDB	TPP9X	16.93	35.61	35.61	16.48	16.48						
	CCS7 Signaling Termination, Per STP Port			UDB	PT8SX	163.49										
	CCS7 Signaling Usage Surrogate, per link per LATA			UDB	STU56	791.37bk										
	CCS7 Signaling Point Code, per Originating Point Code Establishment or Change, per STP affected			UDB	CCAPO		29.08	29.08	35.65	35.65						
	CCS7 Signaling Point Code, per Destination Point Code Establishment or Change, Per Stp Affected			UDB	CCAPD		29.08	29.08	35.65	35.65						
	CCS7 Signaling Usage, Per TCAP Message					0.0000692										
	CCS7 Signaling Usage, Per ISUP Message					0.0000173bk										

Notes: If no rate is identified in the contract, the rates, terms, and conditions for the specific service or function will be as set forth in applicable BellSouth tariff.

Attachment 4

Collocation

BELLSOUTH

PHYSICAL AND VIRTUAL COLLOCATION

1. Scope of Attachment

1.1 The rates, terms, and conditions contained within this Attachment shall only apply when AT&T is physically collocated as a sole occupant or as a Host within a BellSouth Premises (as hereinafter defined) location pursuant to this Attachment. BellSouth Premises include BellSouth Central Offices and Serving Wire Centers; all buildings or similar structures owned, or leased, or otherwise controlled by BellSouth that house its network facilities, and all land owned, leased, or otherwise controlled by BellSouth that is adjacent to these central offices, wire centers, buildings and structures (hereinafter "BellSouth Premises"). This Attachment is applicable to BellSouth Premises owned or leased by BellSouth. However, if the BellSouth Premises occupied by BellSouth is leased by BellSouth from a third party, special considerations and intervals may apply in addition to the terms and conditions contained in this Attachment.

1.2 Right to Occupy. BellSouth shall offer to AT&T collocation on rates, terms, and conditions that are just, reasonable, non-discriminatory and consistent with the rules of the FCC. If BellSouth provides collocation to other telecommunications carriers, or to a BellSouth Affiliate, BellSouth will provide the same collocation to AT&T at rates, terms and conditions no less favorable to AT&T than those provided by BellSouth to other telecommunications carriers, or to a BellSouth Affiliate. Subject to the rates, terms and conditions of this Attachment, where space is available and it is technically feasible, BellSouth will allow AT&T to occupy a certain area designated by BellSouth within a BellSouth Premises, or on BellSouth property upon which the BellSouth Premises is located, of a size which is specified by AT&T and agreed to by BellSouth (hereinafter "Collocation Space"). The necessary rates, terms and conditions for h premises as defined by the FCC, other than BellSouth Premises, shall be negotiated upon reasonable request for collocation at such premises.

1.2.1 Neither BellSouth nor any of BellSouth's affiliates may reserve space for future use on more preferential terms than those set forth in this Attachment.

1.2.1.1 The size specified by AT&T may contemplate a request for space sufficient to accommodate AT&T's growth within a twenty-four (24) month period.

1.3 Space Allocation. BellSouth shall attempt to accommodate AT&T's requested space preferences, if any. In allocating Collocation Space, BellSouth shall not materially increase AT&T's cost or materially delay AT&T's occupation and use of the Collocation Space, assign Collocation Space that will impair the quality of service or otherwise limit the service AT&T wishes to offer, reduce unreasonably the total space available for physical collocation or preclude unreasonable physical collocation within the BellSouth Premises. Space shall not be available for collocation if it is: (a)

physically occupied by non-obsolete equipment; (b) assigned to another collocated telecommunications carrier; (c) used to provide physical access to occupied space; (d) used to enable technicians to work on equipment located within occupied space; (e) properly reserved for future use, either by BellSouth or another collocated telecommunications carrier; or (f) essential for the administration and proper functioning of the BellSouth Premises. BellSouth may segregate Collocation Space and require separate entrances for collocated telecommunications carriers to access their Collocation Space, pursuant to FCC Rules.

1.4 Space Reclamation. In the event of space exhaust within a BellSouth Premises, BellSouth may include in its documentation for the Petition for Waiver filed with the Commission, any unutilized space in the BellSouth Premises, including unutilized space held by AT&T and other collocated telecommunications carriers in BellSouth's Premises. AT&T will be responsible for the justification of unutilized space within its Collocation Space, if the Commission requires such justification.

1.4.1 If physical Collocation Space is needed to accommodate another telecommunication carrier's request for physical collocation or BellSouth's own immediate space needs, BellSouth may provide notice, which must be in writing, to AT&T requesting that AT&T release unutilized Collocation Space to BellSouth. BellSouth may reclaim from AT&T any physical Collocation Space that is not being "efficiently used" or that cannot be proven to be needed within the two (2) year planning period. This term ("efficiently used") shall mean that substantially all of the floor space is taken up by AT&T's collocated equipment as described in Section 5.1 of this Attachment. In addition, BellSouth may reclaim, for the same reasons as those stated above, any space that is not being used at all to house AT&T's equipment and/or facilities for collocation purposes. AT&T will have one hundred eighty (180) calendar days from receipt of notice by BellSouth to AT&T of the need for such physical Collocation Space to ensure that such space is being used in accordance with the terms and conditions herein and shall be responsible to justify to the Commission, if the Commission requires such justification.

1.5 Use of Space. AT&T shall use the Collocation Space for the purpose of installing, maintaining and operating AT&T's equipment (including testing and monitoring equipment) necessary for interconnection with BellSouth's services/facilities or for accessing BellSouth's unbundled network elements for the provision of telecommunications services, as specifically set forth in this Agreement. The Collocation Space assigned to AT&T may not be used for any purposes other than as specifically described herein or in any amendment hereto.

1.6 BellSouth will provide virtual collocation, in accordance with applicable FCC and Commission rules and orders.

1.7 BellSouth shall relinquish any space held for future use before denying a request for virtual collocation on the grounds of space limitations, unless BellSouth proves to the Commission that virtual collocation at that point is not technically feasible.

1.8 Rates and Charges. AT&T agrees to pay the rates and charges identified in Exhibit B attached hereto.

1.9 Collocation Billing. Upon AT&T's request, BellSouth will separate AT&T's collocation charges between the Monthly Recurring Charges (MRCs) and the nonrecurring charges (NRCs) by establishing two unique Billing Account Numbers (BANs) for each collocation arrangement in a BellSouth Central Office. One BAN will be used to capture all of AT&T's MRCs and the other BAN will be used to capture all of AT&T's NRCs for the collocation arrangement. Separate bills will be sent to the location specified by AT&T for each type of charge.

The billing label for the bills containing the MRCs for AT&T's collocation arrangements will be "Expanded Interconnection Services". The billing label for the bills that reflect the NRCs for AT&T's collocation arrangements will be "Collocation".

BellSouth will provide "split billing" for no more than two (2) BANs per collocation arrangement. When AT&T submits an Initial Application then the initial rate for split billing, as set forth in Exhibit B, will be applied in addition to the Initial Application Fee. When AT&T submits a Subsequent Application that contains new recurring or nonrecurring charges, the subsequent split billing rate, as set forth in Exhibit B, in addition to the appropriate Subsequent Application Fee will apply. Only when an Initial or Subsequent Application contains new recurring or nonrecurring charges will the appropriate initial or subsequent split bill rate apply.

1.10 If any due date contained in this Attachment falls on a weekend or a National holiday, the due date will be the next business day thereafter. For intervals of ten (10) calendar days or less, National holidays will be excluded.

1.11 The Parties agree to comply with all applicable federal, state, county, local and administrative laws, rules, ordinances, regulations and codes in the performance of their obligations hereunder.

2. Space Availability Report

2.1 Space Availability Report. Upon request from AT&T, BellSouth will provide a written report (Space Availability Report) describing in detail the space that is currently available for collocation at a particular BellSouth Premises. This report will include the amount of Collocation Space available at the BellSouth Premises requested, the number of collocators present at the BellSouth Premises, any modifications in the use of the space since the last report on the BellSouth Premises requested and the measures BellSouth is taking to make additional space available for collocation arrangements. A Space Availability Report does not reserve space at the BellSouth Premises for which the Space Availability Report was requested by AT&T.

The request from AT&T for a Space Availability Report must be in writing and include the BellSouth Premises street address, as identified in the Local Exchange Routing Guide (LERG) and Common Language Location Identification (CLLI) code

of the BellSouth Premises. CLLI code information is located in the National Exchange Carrier Association (NECA) Tariff FCC No. 4.

2.1.2 BellSouth will respond to a request for a Space Availability Report for a particular BellSouth Premises within ten (10) calendar days of receipt of such request. BellSouth will respond in ten (10) calendar days to a request for a Space Availability Report for up to and including five (5) BellSouth Premises within the same state. The response time for a request for a Space Availability Report of more than five (5) BellSouth Premises shall be negotiated between the Parties. If BellSouth cannot meet the ten (10) calendar-day response time, BellSouth shall notify AT&T and inform AT&T of the time frame under which it can respond.

3. Collocation Options

3.1 Cageless. BellSouth shall allow AT&T to collocate AT&T's equipment and facilities without requiring the construction of a cage or similar structure. BellSouth shall allow AT&T to have direct access to AT&T's equipment and facilities in accordance with Section 5.9. BellSouth shall make cageless collocation available in single bay increments. Except where AT&T's equipment requires special technical considerations (e.g., special cable racking or isolated ground plane), BellSouth shall assign cageless Collocation Space in conventional equipment rack lineups where feasible. For equipment requiring special technical considerations, AT&T must provide the equipment layout, including spatial dimensions for such equipment pursuant to generic requirements contained in Telcordia GR-63-Core, and shall be responsible for compliance with all special technical requirements associated with such equipment.

3.2 Caged. At AT&T's expense, AT&T will arrange with a Supplier certified by BellSouth (BellSouth Certified Supplier) to construct a collocation arrangement enclosure in accordance with BellSouth's Technical References (TRs) (hereinafter referred to as Specifications) prior to starting equipment installation. BellSouth will provide Specifications upon request. Where local building codes require enclosure specifications more stringent than BellSouth's enclosure Specifications, AT&T and AT&T's BellSouth Certified Supplier must comply with the more stringent local building code requirements. AT&T's BellSouth Certified Supplier shall be responsible for filing and obtaining any and all necessary permits and/or licenses for such construction. BellSouth shall cooperate with AT&T and provide, at AT&T's expense, the documentation, including existing building architectural drawings, enclosure drawings, and Specifications required and necessary for AT&T's BellSouth Certified Supplier to obtain all necessary permits and/or other licenses. AT&T's BellSouth Certified Supplier shall bill AT&T directly for all work performed for AT&T to comply with this Attachment. BellSouth shall have no liability for, nor responsibility to pay, such charges imposed by AT&T's BellSouth Certified Supplier. AT&T must provide the local BellSouth Central Office Building Contact with two (2) Access Keys that will allow entry into the locked enclosure. Access Keys provided to BellSouth shall not be duplicated under any circumstances. Except in the case of an emergency,

BellSouth will not access AT&T's locked enclosure prior to notifying AT&T at least forty-eight (48) hours or two (2) business days, whichever is greater, before access to the Collocation Space is required. BellSouth shall notify AT&T in writing immediately in the case of lost or stolen Access Keys. BellSouth will reimburse AT&T the reasonable costs to replace each Access Key lost or stolen. Should it become necessary for AT&T to re-key locked enclosures as a result of a lost Access Key(s) or for failure to return an Access Key(s), BellSouth shall pay for all reasonable costs associated with the re-keying. AT&T shall have the right, at its expense, to have locks changed where deemed necessary for the protection and security of its locked enclosures, provided that AT&T shall immediately provide BellSouth with such new keys. AT&T will remit any and all BellSouth bills for a lost or stolen Access Key to the applicable BellSouth Central Office Manager. Upon request, BellSouth shall construct the enclosure for AT&T.

3.2.1 BellSouth may elect to review AT&T's plans and specifications prior to allowing construction to start, to ensure compliance with BellSouth's Specifications. BellSouth will notify AT&T of its desire to execute this review in BellSouth's response to the Initial Application, if AT&T has indicated its desire to construct its own enclosure. If AT&T's Initial Application does not indicate its desire to construct its own enclosure, and AT&T subsequently decides to construct its own enclosure prior to the BellSouth Application Response, as defined in Section 6.10 of this Attachment, then AT&T will submit an application modification, indicating its desire to construct its own enclosure, and no additional application fees will be assessed by BellSouth. If AT&T subsequently decides to construct its own enclosure after the firm order (hereinafter "Firm Order"), AT&T will submit a Subsequent Application, as defined in Section 6.3 of this Attachment. If BellSouth elects to review AT&T's plans and specifications, then BellSouth will provide notification within ten (10) calendar days after the Subsequent Application firm order date. BellSouth shall complete its review within fifteen (15) calendar days after the receipt of AT&T's plans and specifications. Regardless of whether or not BellSouth elects to review AT&T's plans and specifications, BellSouth reserves the right to inspect the enclosure after construction has been completed to ensure that it is constructed according to AT&T's submitted plans and specifications and/or BellSouth's Specifications, as applicable. If BellSouth decides to inspect the constructed Collocation Space, BellSouth will complete its inspection within fifteen (15) calendar days after receipt of written notification of completion of the enclosure from AT&T. BellSouth shall require AT&T to remove or correct within seven (7) calendar days, at AT&T's expense, any structure that does not meet AT&T's plans and specifications or BellSouth's Specifications, as applicable.

3.3 Shared Caged Collocation. AT&T may allow other telecommunications carriers to share AT&T's caged collocation arrangement, pursuant to the terms and conditions agreed to by AT&T (Host) and the other telecommunications carriers (Guests) contained in this Section, except where the BellSouth Premises is located within a leased space and BellSouth is prohibited by said lease from offering such an option to AT&T. BellSouth shall be notified in writing by AT&T upon the execution of any agreement between the Host and its Guest(s) within ten (10) calendar days of its execution and prior to the submission of any Firm Orders. Further, such notification

shall include the name of the Guest(s), the term of the agreement, and a certification by AT&T that said agreement imposes upon the Guest(s) the same terms and conditions for Collocation Space as set forth in this Attachment between BellSouth and AT&T. The term of the agreement between the Host and its Guest(s) shall not exceed the term of this Attachment between BellSouth and AT&T.

3.3.1 AT&T, as the Host, shall be the sole interface and responsible Party to BellSouth for the assessment and billing of rates and charges contained within this Attachment. AT&T is also responsible for ensuring that the safety and security requirements of this Attachment are fully complied with by the Guest(s), its employees and agents. BellSouth shall provide AT&T with a proration of the costs of the Collocation Space based on the number of collocators and the space used by each. There will be a minimum charge of one (1) bay/rack per Host/Guest. In addition to the above, AT&T shall be the responsible party to BellSouth for the purpose of submitting applications for initial and additional equipment placement for the Guest(s). A separate Guest application shall result in the assessment of an Initial Application Fee or a Subsequent Application Fee, as set forth in Exhibit B, which will be billed to the Host on the date that BellSouth provides its written response to the Guest(s) Bona Fide Application (Application Response).

3.3.2 Notwithstanding the foregoing, the Guest(s) may submit service orders directly to BellSouth to request the provisioning of interconnecting facilities between BellSouth and the Guest(s), the provisioning of services, and access to unbundled network elements. The bill for these interconnecting facilities, services and UNEs will be charged to the Guest(s) pursuant to the applicable Tariff or the Guest's Interconnection Agreement with BellSouth.

3.3.3 AT&T shall indemnify and hold harmless BellSouth from any and all claims, actions, causes of action, of whatever kind or nature arising out of the presence of AT&T's Guest(s) in the Collocation Space, except to the extent caused by BellSouth's sole negligence, gross negligence, or willful misconduct.

3.4 Transfer of Collocation Space

3.4.1 Transfer of Collocation Space. AT&T shall be allowed to transfer collocation space to or from another CLEC under the following conditions: (1) the central office is not at or near space exhaustion; (2) the transfer of space shall be contingent upon BellSouth's approval, who will not unreasonably withhold permission; (3) there are no unpaid, undisputed collocation balances[4] between BellSouth and the transferring CLEC; and (4) the transfer of the collocation space is in conjunction with AT&T's sale or purchase of all, or substantially all, of the in-place collocation equipment to the same CLEC.

1.1 _____

4Any disputed bills are governed by interconnection agreements and contracts which already exist between the parties.

3.4.2 When AT&T is transferring collocation space to another CLEC, AT&T's responsibilities shall include: (1) submitting a letter of authorization to BellSouth for the transfer; (2) entering into a transfer agreement with BellSouth and the acquiring CLEC; and (3) returning all access devices to BellSouth.

3.4.3 When the transfer of collocation space is to AT&T from another CLEC, AT&T's responsibilities shall include: (1) submitting an application to BellSouth for transfer of the collocation arrangement; (2) satisfying all requirements of its interconnection agreement with BellSouth; (3) submitting a letter to BellSouth for the assumption of services; and (4) entering into a transfer agreement with BellSouth and the transferring CLEC. It is the responsibility of BellSouth to ensure that the above responsibilities are completely satisfied and the transfer of space is done as quickly as possible.

3.5 Adjacent Collocation. Subject to technical feasibility and space availability, BellSouth will permit an adjacent collocation arrangement (Adjacent Arrangement) on BellSouth Premises' property only when space within the requested BellSouth Premises is legitimately exhausted and subject only to reasonable safety and maintenance requirements. An Adjacent Arrangement shall be procured by AT&T or constructed by AT&T's BellSouth Certified Supplier and must be in conformance with BellSouth's design and construction Specifications. Further, AT&T shall construct, procure, maintain and operate said Adjacent Arrangement(s) pursuant to all of the rates, terms and conditions set forth in this Attachment.

If AT&T requests Adjacent Collocation, pursuant to the conditions stated in 3.4 above, AT&T must arrange with a BellSouth Certified Supplier to construct the Adjacent Arrangement structure in accordance with BellSouth's Specifications. BellSouth will provide the appropriate Specifications upon request. Where local building codes require enclosure specifications more stringent than BellSouth's Specifications, AT&T and AT&T's BellSouth Certified Supplier shall comply with the more stringent local building code requirements. AT&T's BellSouth Certified Supplier shall be responsible for filing and receiving any and all necessary zoning, permits and/or licenses for such construction. AT&T's BellSouth Certified Supplier shall bill AT&T directly for all work performed for AT&T to comply with this Attachment. BellSouth shall have no liability for, nor responsibility to pay, such charges imposed by AT&T's BellSouth Certified Supplier. AT&T must provide the local BellSouth Central Office Building Contact with two (2) cards, keys or other access devices used to gain entry into the locked enclosure. Access Keys provided to BellSouth shall not be duplicated under any circumstances. BellSouth shall notify AT&T in writing immediately in the case of lost or stolen Access Keys. BellSouth will reimburse AT&T the reasonable costs to replace each Access Key lost or stolen. Should it become necessary for AT&T to re-key locked enclosures as a result of a lost Access Key(s) or for failure to return an Access Key(s), BellSouth shall pay for all reasonable costs associated with the re-keying. AT&T shall have the right, at its expense, to have locks changed where deemed necessary for the protection and security of its locked enclosures, provided that AT&T shall immediately provide BellSouth with such new keys. AT&T will remit any and all BellSouth bills for a lost or stolen card, key or access device to the applicable BellSouth Central Office

Manager. Except in the case of an emergency, BellSouth will not access AT&T's locked enclosure prior to notifying AT&T at least forty-eight (48) hours or two (2) business days, whichever is greater, before access to the Collocation Space is required.

AT&T must submit its Adjacent Arrangement construction plans and specifications to BellSouth when it places its firm order. BellSouth shall review AT&T's plans and specifications prior to the construction of an Adjacent Arrangement(s) to ensure AT&T's compliance with BellSouth's Specifications. BellSouth shall complete its review within fifteen (15) calendar days after receipt of the plans and specifications from AT&T for the Adjacent Arrangement. BellSouth may inspect the Adjacent Arrangement during and after construction is completed to ensure that it is constructed according to AT&T's submitted plans and specifications. If BellSouth decides to inspect the completed Adjacent Arrangement, BellSouth will complete its inspection within fifteen (15) calendar days after receipt of written notification of completion of the enclosure from AT&T. BellSouth shall require AT&T to remove or correct within seven (7) calendar days, at AT&T's expense, any structure that does not meet its submitted plans and specifications or BellSouth's Specifications, as applicable, unless the Parties mutually agree to an alternative time frame.

3.5.3 AT&T shall provide a concrete pad, the structure housing the arrangement, heating/ventilation/air conditioning (HVAC), lighting, and all of the facilities that are required to connect the structure (i.e., racking, conduits, etc.) to the BellSouth point of demarcation. At AT&T's option, and where the local authority having jurisdiction permits, BellSouth shall provide an AC power source and access to physical collocation services and facilities, subject to the same nondiscriminatory requirements as those applicable to any other physical collocation arrangement. Where AT&T has elected to construct the adjacent enclosure itself, BellSouth shall deliver to AT&T the requested ground space thirty (30) days after BellSouth receives AT&T's Bona Fide Firm Order, unless BellSouth requests an extension of that time, which AT&T will not unreasonably withhold. BellSouth will provide DC power in an adjacent enclosure provided that such provisioning can be done in compliance with all applicable national electrical and safety code or any local codes, such as but not limited to zoning codes, provided that BellSouth and AT&T can agree upon a reasonable price for the provision of this service, and provided that BellSouth and AT&T can negotiate a reasonable provisioning interval.

3.5.4 If physical collocation space becomes available in a previously exhausted BellSouth structure, BellSouth must not require AT&T to move or prohibit AT&T from moving, a collocation arrangement into that structure in accordance with the rates terms and conditions of this Attachment. Instead, BellSouth must continue to allow AT&T to collocate in any adjacent controlled environmental vault, or similar structure that AT&T has constructed or otherwise procured unless otherwise agreed to by the Parties or as ordered by a Commission.

3.6 Direct Connect. BellSouth will permit AT&T to directly interconnect between its own virtual/physical Collocation Space within the same central office by utilizing a Direct

Connect. AT&T shall contract with a BellSouth Certified Supplier to place the Direct Connect, which shall be provisioned using facilities owned by AT&T. AT&T-provisioned DC's shall utilize BellSouth common cable support structure. There will be a recurring charge per linear foot, per cable of the actual common cable support structure used by AT&T to provision the Direct Connects between its virtual/physical Collocation Spaces. In those instances where AT&T's virtual/physical Collocation Space is contiguous in the central office, AT&T will have the option of using AT&T's own technicians to deploy the Direct Connects using either electrical or optical facilities between its Collocation Spaces by constructing its own dedicated cable support structure. AT&T will deploy such electrical or optical connections directly between its own facilities without being routed through BellSouth's equipment. AT&T may not self-provision Direct Connects on any BellSouth distribution frame, POT, DSX (Digital System Cross-Connect) or LGX (Light Guide Cross-Connect). AT&T is responsible for ensuring the integrity of the signal.

To place an order for Direct Connects, AT&T must submit an Initial Application or Subsequent Application. Fees associated with Direct Connect applications, if any, are addressed in Sections 6.2 and 6.3.1 of this Attachment.

3.7 Co-Carrier Cross Connect (CCXC). The primary purpose of collocation is for a telecommunications carrier to interconnect with BellSouth's network or to access BellSouth's unbundled network elements for the provision of telecommunications services. BellSouth will permit AT&T to interconnect between its virtual or physical collocation arrangement(s) and that (those) of another collocated telecommunications carrier within the same BellSouth Premises. Both AT&T's agreement and the other collocated telecommunications carrier's agreement must contain the CCXC rates, terms and conditions before BellSouth will permit the provisioning of CCXCs between the two collocated carriers. AT&T is prohibited from using the Collocation Space for the sole or primary purpose of cross-connecting to other collocated telecommunications carriers.

AT&T must contract with a BellSouth Certified Supplier to place the CCXC. The CCXC shall be provisioned using facilities owned by AT&T. Such cross-connections to other collocated telecommunications carriers may be made using either electrical or optical facilities. AT&T shall be responsible for providing a letter of authorization (LOA), with the application, to BellSouth from the other collocated telecommunications carrier to which it will be cross-connecting. The AT&T-provisioned CCXC shall utilize BellSouth common cable support structure. There will be a recurring charge per linear foot, per cable, of common cable support structure used by AT&T to provision the CCXC to the other collocated telecommunications carrier. In those instances where AT&T's equipment and the equipment of the other collocated telecommunications carrier are located in contiguous caged Collocation Space, AT&T may use its own technicians to install co-carrier cross connects using either electrical or optical facilities between the equipment of both collocated telecommunications carriers by constructing a dedicated cable support structure between the two contiguous cages. AT&T shall deploy such electrical or optical cross-connections directly between its own facilities and the facilities of another collocated

telecommunications carrier without being routed through BellSouth's equipment. AT&T shall not provision CCXC on any BellSouth distribution frame, POT (Point of Termination) Bay, DSX (Digital System Cross-Connect) or LGX (Light Guide Cross-Connect). AT&T is responsible for ensuring the integrity of the signal.

To place an order for CCXCs, AT&T must submit an Initial Application or Subsequent Application to BellSouth. Fees associated with CCXC applications, if any, are addressed in Sections 6.2 and 6.3.1 of this Attachment.

4. Occupancy

4.1 Occupancy. BellSouth will notify AT&T in writing when the Collocation Space is ready for occupancy (Space Ready Date). AT&T will schedule and complete an acceptance walkthrough of the Collocation Space with BellSouth within fifteen (15) calendar days of the Space Ready Date. BellSouth will correct any deviations in AT&T's original or jointly amended application requirements within seven (7) calendar days after the walkthrough, unless the Parties mutually agree upon a different time frame. The new Space Ready Date will be calculated by adding no more than seven (7) calendar days from the date that any deviations are agreed to by the Parties as a result of the walkthrough, if a walkthrough has been conducted. The correction of these deviations from AT&T's original request shall be at BellSouth's expense. Within fifteen (15) days of the new Space Ready Date, or as otherwise mutually agreed to by the Parties, another acceptance walkthrough will be conducted. This follow-up acceptance walkthrough will be limited to only those items identified in the initial walkthrough. At the end of the acceptance walkthrough or after all deviations are corrected, AT&T will execute a written document accepting the Collocation Space, and billing will begin from that date. In the event AT&T fails to complete an acceptance walkthrough within this fifteen (15) calendar day interval, the Collocation Space shall be deemed accepted by AT&T on the most recent Space Ready Date and billing will commence from that date. If AT&T decides to occupy the space prior to the Space Ready Date, the date AT&T occupies the space is deemed the new Space Acceptance Date and billing will begin from that date. AT&T must notify BellSouth in writing that its collocation equipment installation is complete and operational with BellSouth's network. BellSouth may, at its discretion, refuse to accept any orders for cross-connects until it has received such notice. For the purposes of this paragraph, AT&T's telecommunications equipment will be deemed operational when it has been cross-connected to BellSouth's network for the purpose of provisioning telecommunication services to its customers.

4.2 Termination of Occupancy. In addition to any other provisions addressing termination of occupancy in this Agreement, AT&T may terminate its occupancy of a particular Collocation Space, in whole or in part, by submitting a Subsequent Application requesting termination of occupancy. Such termination shall be effective upon BellSouth's acceptance of the Space Relinquishment Form. Billing for monthly recurring charges will cease on the date that AT&T and BellSouth conduct an inspection of the terminated space and jointly sign off on the Space Relinquishment Form or on the date that AT&T signs off on the Space Relinquishment Form and

sends this form to BellSouth, provided no discrepancies are found during BellSouth's subsequent inspection of the terminated space. If the subsequent inspection by BellSouth reveals discrepancies, billing will cease on the date that BellSouth and AT&T jointly conduct an inspection, confirming that AT&T has corrected all of the noted discrepancies identified by BellSouth. A Subsequent Application Fee will not apply for the termination of occupancy; however, specific disconnect fees may apply to certain rate elements. The particular disconnect fees that would apply are contained in Exhibit B of this Attachment. BellSouth may terminate AT&T's right to occupy Collocation Space in the event AT&T fails to comply with any material provision directly related to Collocation in this Agreement provided BellSouth gives AT&T thirty (30) calendar days' prior written notice of the failure to comply and gives AT&T an opportunity to cure during such period. Notwithstanding the above, any termination for non-payment of applicable fees, shall be in accordance with Section 1.14 of Attachment 7, Billing.

4.2.1 Upon termination of occupancy, AT&T, at its sole expense, shall remove its equipment and any other property owned, leased or controlled by AT&T from the Collocation Space. AT&T shall have thirty (30) calendar days from the Bona Fide Firm Order (BFFO) date ("Termination Date") to complete such removal, including the removal of all equipment and facilities of AT&T's Guest(s), unless AT&T's Guest(s) has assumed responsibility for the Collocation Space housing the Guest(s)'s equipment and executed the appropriate documentation required by BellSouth prior to the AT&T removal date. AT&T shall continue the payment of all monthly recurring charges to BellSouth until the date AT&T, and if applicable AT&T's Guest(s), has fully vacated the Collocation Space and the Space Relinquishment Form has been accepted by BellSouth. If AT&T or AT&T's Guest(s) fails to vacate the Collocation Space within thirty (30) calendar days from the "Termination Date", BellSouth shall have the right to remove and dispose of the equipment and any other property of AT&T or AT&T's Guest(s), in any manner that BellSouth deems fit, at AT&T's expense and with no liability whatsoever for AT&T's property or AT&T's Guest(s)'s property. Upon termination of AT&T's right to occupy specific Collocation Space, the Collocation Space will revert back to BellSouth's space inventory, and AT&T shall surrender the Collocation Space to BellSouth in the same condition as when it was first occupied by AT&T, with the exception of ordinary wear and tear, unless otherwise agreed to by the Parties. AT&T's BellSouth Certified Supplier shall be responsible for updating and making any necessary changes to BellSouth's records as required by BellSouth's Specifications including, but not limited to, BellSouth's Central Office Record Drawings and ERMA Records. AT&T shall be responsible for the cost of removing any AT&T constructed enclosure, together with any supporting structures (e.g., racking, conduits, or power cables), by the "Termination Date" and restoring the grounds to their original condition.

5. Use of Collocation Space

5.1 Equipment Type. BellSouth shall permit the collocation and use of any equipment necessary for interconnection to BellSouth's network or access to BellSouth's unbundled network elements in the provision of telecommunications services, as the term "necessary" is defined by FCC 47 C.F.R. Section 51.323 (b). Equipment is necessary for interconnection if an inability to deploy that equipment would, as a practical, economic, or operational matter, preclude the requesting carrier from obtaining interconnection with BellSouth at a level equal in quality to that which BellSouth obtains within its own network or what BellSouth provides to any Affiliate, subsidiary, or other party.

5.2 Equipment is necessary for access to an unbundled network element if an inability to deploy that equipment would, as a practical, economic, or operational matter, preclude the requesting carrier from obtaining nondiscriminatory access to that unbundled network element, including any of its features, functions, or capabilities.

5.3 Multi-functional equipment shall be deemed necessary for interconnection or access to an unbundled network element if and only if the primary purpose and function of the equipment, as the requesting carrier seeks to deploy it, meets either or both of the standards set forth above in Sections 5.1 and 5.2. For a piece of equipment to be utilized primarily to obtain equal in quality interconnection or nondiscriminatory access to one or more unbundled network elements, there also must be a logical nexus between the additional functions the equipment would perform and the telecommunications services the requesting carrier seeks to provide to its customers by means of the interconnection or unbundled network element. The collocation of those functions of the equipment that, as stand-alone functions, do not meet either of the standards set forth above in Sections 5.1 and 5.2 must not cause the equipment to significantly increase the burden on BellSouth's property. Such equipment necessary for interconnection or access to unbundled network elements shall include, but is not limited to transmission equipment, equipment to light dark fiber, optical terminating equipment and multiplexers, digital subscriber line access multiplexers, routers, asynchronous transfer mode multiplexers, multifunction equipment, remote switching modules, fiber distribution frames, splitters, concentrators, cross connect systems, switching equipment other than traditional circuit switches and ancillary equipment that enables a requesting carrier to assure proper provisioning and functioning of other collocated equipment.

Examples of equipment that would not be considered necessary include, but are not limited to: traditional circuit switching equipment, equipment used exclusively for call-related databases, computer servers used exclusively for providing information services, operations support system (OSS) equipment used to support collocated telecommunications carrier network operations, equipment that generates customer orders, manages trouble tickets or inventory, or stores customer records in centralized databases, etc. BellSouth will determine upon receipt of an application if the requested equipment is necessary based on the criteria established by the FCC. Multifunctional equipment placed on the BellSouth Premises must not place any

greater relative burden on BellSouth's property than comparable single function equipment.

5.4 Whenever BellSouth objects to collocation of equipment by AT&T for purposes within the scope of section 25 1 (c) (6) of the Act, BellSouth shall prove to the state commission that the equipment is not necessary for interconnection or access to unbundled network elements under the standards set forth above in this Section. BellSouth may not object to the collocation of equipment on the grounds that the equipment does not comply with safety or engineering standards that are more stringent than the safety or engineering standards that BellSouth applies to its own equipment. BellSouth may not object to the collocation of equipment on the ground that the equipment fails to comply with Network Equipment and Building Specifications (NEBS) performance standards or any other performance standards. If BellSouth denies collocation of AT&T's equipment, citing safety standards, BellSouth must provide to AT&T within five (5) business days of the denial a list of all equipment that BellSouth locates at the premises in question, together with an affidavit attesting that all of that equipment meets or exceeds the safety standard that Bellsouth contends AT&T's equipment fails to meet. This affidavit must set forth in detail: the exact safety requirement that AT&T's equipment does not satisfy; BellSouth's basis for concluding that AT&T's equipment does not meet this safety requirement; and BellSouth's basis for concluding why collocation of equipment not meeting this safety requirement would compromise network safety.

5.5 AT&T shall not request more DS0, DS1, DS3 and optical terminations for a collocation arrangement than the total port or termination capacity of the equipment physically installed in the arrangement. The total capacity of the equipment collocated in the arrangement will include equipment contained in an application, as well as equipment already placed in the collocation arrangement. If full network termination capacity of the equipment being installed is not requested in the application, additional network terminations for the installed equipment will require the submission of another application. In the event AT&T submits an application for terminations that will exceed the total capacity of the collocated equipment, AT&T will be informed of the discrepancy by BellSouth and required to submit a revision to the application.

5.6 Commencing with the most current calendar quarter after the effective date of this Attachment, and thereafter with respect to each subsequent calendar quarter during the term of this Attachment, AT&T will, no later than thirty (30) days after the close of such calendar quarter, provide a report to ICS Collocation Product Management, Room 34A55, 675 W. Peachtree Street, Atlanta, Georgia 30375 listing any equipment in the Collocation Space that was added during the calendar quarter for which there is a UCC-1 lien holder or another entity that has a secured financial interest in such equipment. This shall be defined as "Secured Equipment". If no Secured Equipment has been installed within a given calendar quarter, no report shall be due hereunder in connection with such calendar quarter.

5.7 AT&T shall not use the Collocation Space for marketing purposes, nor shall it place any identifying signs or markings outside the Collocation Space or on the grounds of the BellSouth Premises.

5.8 AT&T shall place a plaque or affix other identification (e.g., stenciling) to AT&T's equipment, including the appropriate emergency contacts with their corresponding telephone numbers, in order for BellSouth to properly identify AT&T's equipment in the case of an emergency.

5.9 Entrance Facilities. AT&T may elect to place AT&T-owned or AT&T-leased fiber entrance facilities into its Collocation Space. BellSouth will designate the point of interconnection in close proximity to the BellSouth Premises building housing the Collocation Space, such as at an entrance manhole or a cable vault, which are physically accessible by both Parties. AT&T will provide and place fiber cable at the point of entrance of sufficient length to be pulled through conduit and into the splice location. If AT&T desires to place cable other than fiber, BellSouth shall permit interconnection using copper or coaxial cable if such interconnection is first approved by the Commission. AT&T will provide and install a sufficient length of fire retardant riser cable, to which the entrance cable will be spliced by BellSouth. The fire retardant riser cable will extend from the splice location to AT&T's equipment in the Collocation Space. In the event AT&T utilizes a non-metallic, riser-type entrance facility, a splice will not be required. AT&T must contact BellSouth for instructions prior to placing any entrance facility cable in the manhole. AT&T is responsible for the maintenance of the entrance facilities. At AT&T's option, BellSouth will accommodate, where technically feasible, a microwave entrance facility, pursuant to separately negotiated terms and conditions. In the case of adjacent collocation, copper facilities may be used between the adjacent collocation arrangement and the central office demarcation point unless BellSouth determines that limited space is available for the placement of entrance facilities.

Dual Entrance Facilities. BellSouth will provide at least two interconnection points at each Premise where at least two such interconnection points are available and capacity exists. Upon receipt of a request by AT&T for dual entrance facilities to its physical Collocation Space, BellSouth shall provide AT&T with information regarding BellSouth's capacity to accommodate the requested dual entrance facilities. If conduit in the serving manhole(s) is available and is not reserved for another purpose or for utilization within twelve (12) months of the receipt of an application for collocation, BellSouth will make the requested conduit space available for the installation of a second entrance facility to AT&T's Collocation Space. The location of the serving manhole(s) will be as close as reasonably possible to the BellSouth Premises housing the Collocation Space, but determined at the sole discretion of BellSouth. Where dual entrance facilities are not available due to lack of capacity, BellSouth will provide this information to AT&T in the Application Response.

5.9.2 Shared Use. If BellSouth or an existing third party interconnector has installed fiber entrance cable into a BellSouth Premises and AT&T wishes to connect its riser cable

to this fiber entrance cable, AT&T may lease or purchase any available non-working dark fiber entrance cable from BellSouth or the third party interconnector at the BellSouth Premises cable vault. AT&T must arrange with BellSouth to perform the splice of BellSouth's or the third party interconnector's available non-working dark fiber entrance cable to AT&T's fiber riser cable in accordance with BellSouth's Special Construction Procedures, RL93-11-030BT. AT&T must also provide a LOA from the third party interconnector authorizing BellSouth to perform the splice of AT&T's- riser cable to the entrance cable owned by the third party interconnector. If AT&T desires to allow another telecommunications carrier to connect its fiber riser cable to AT&T's available non-working dark fiber entrance cable that terminates into a BellSouth Premises, this telecommunications carrier must arrange for BellSouth to perform the cable splice in accordance with BellSouth's Special Construction Procedures, RL93-11-030BT, and provide a LOA from AT&T authorizing BellSouth to perform the splice of this telecommunications carrier's fiber riser cable to the available non-working dark fiber entrance cable owned by AT&T.

5.10 Demarcation Point. BellSouth will designate the point(s) of demarcation between AT&T's equipment and/or network and BellSouth's network located as close as reasonably possible to AT&T's Collocation Space. Each Party will be responsible for the maintenance and operation of all equipment/facilities on its side of the demarcation point. BellSouth will not require AT&T to use an intermediate connection in lieu of direct interconnection to BellSouth's network, if technically feasible. For 2-wire and 4-wire connections to BellSouth's network, the demarcation point shall be a common block on BellSouth's designated conventional distributing frame (CDF). AT&T shall be responsible for providing the necessary cabling, and AT&T's BellSouth Certified Supplier shall be responsible for installing and properly labeling/stenciling the common block and any necessary cabling identified in Section 7 of this Attachment. AT&T or its agent must perform all required maintenance to the equipment/facilities on its side of the demarcation point, pursuant to Section 5.7, following, and may self-provision cross-connects that may be required within its own Collocation Space to activate service requests.

5.11 Facility Labeling and Assignment Information for Physical Collocation

5.11.1 When a POT bay is used:

5.11.1.1 For a DS0 interface, stenciling and labeling on the BellSouth MDF and COSMIC frames and the DS0 POT bays should be done as follows:

With a non-cross-connectable POT, label the POT frame with its frame name (FA0, etc.) and its own RR#. Label **each block** (or place a label for a group of blocks such as for each row) on the POT with the cable name and count, the row (shelf letter) and vertical range, and the BST frame name and row and vertical range where it appears on the BST MDF. Label the MDF frame blocks with the cable and pair name and count, and with the POT frame name, RR#, and row and vertical range it is terminated on. This labeling is to be done by the BellSouth vendor placing the cabling between the POT and the BellSouth MDF.

- *With a cross-connectable POT*, label the POT frame itself with its frame name (FA0, etc.) and its own RR#. Label the collocator's assigned **terminations** with the collocator's cable and pair name and range. Label the BellSouth assigned **terminations** with the tie cable and pair name and range and the MDF/COSMIC frame name and row and vertical range where they appear. Label the COSMIC frame with the MELD run labels; label the non-COSMIC frame blocks with the tie cable name and pairs and the POT frame name, RR#, and row (shelf letter) and vertical range of the POT it is connected to. (Note that the BellSouth vendor cannot wire between the cross-connectable POT and the COSMIC until the output of the MELD run is available; he must wire it as shown on that output.) This labeling is to be done by the BellSouth vendor placing the cabling between the POT and the BellSouth MDF/COSMIC frame.

5.11.1.2 For a DS1, DS3 or fiber interface at a collocation arrangement, stenciling or labeling at the POT and at the BellSouth frames should be done in the following manner:

With a non-cross-connectable POT (cross-connectable POT is not available for these levels of service), label the POT frame (or panel(s)) with its frame name, relay rack number, and shelf/panel designations; label them with the collocator's ACNA (CCNA) also. Label each POT panel with the BellSouth DSX/LGX bay, panel, and jack #s to which they are wired. Label the BellSouth DSX/LGX panels with the POT frame name, relay rack #, shelf/panel, and jack #s to which they are wired. This labeling is to be done by the BellSouth vendor placing the cabling between the POT and the BellSouth DSX/LGX frames.

5.11.2 When a POT bay is NOT used

5.11.2.1 For a DS0 interface, stenciling and labeling on the BellSouth MDF and COSMIC frames and the DS0 POT bays should be done as follows:

- Label the MDF frame blocks with the cable and pair name and count, the relay rack number of the collocator's equipment, and the collocator's ACNA. The collocator's equipment should be labeled in the same manner that BellSouth's own equipment is labeled. This must be done by the collocator's vendor (who will be placing the cabling between the collocator and the BellSouth MDF).

5.11.2.2 For a DS1, DS3 or fiber interface, stenciling or labeling at the POT and at the BellSouth frames should be done in the following manner:

- Label the BellSouth DSX/LGX panels with the relay rack number of the collocator's equipment, the collocator's ACNA, and the TIE carrier (T1TIE/T3TIE) or fiber cable (fiber) IDs. The collocator's equipment should be labeled in the same manner that BellSouth's own equipment is labeled. This labeling is to be done by the collocator's vendor (who will be placing the cabling between the collocator and the BellSouth DSX/LGX frames).

5.12 Verification and Testing of Intra-office Wiring (Post Delivery of Collocation Space)

5.12.1 Whenever AT&T is responsible for either the installation, testing and/or maintenance of any intra-office wiring that directly connects the AT&T collocation space to the BellSouth Main Distribution Frame (MDF), when it is the demarcation point, AT&T has the option of performing verification and testing procedures up to the termination blocks on the MDF where the AT&T wiring terminates. The right to engage in such testing shall extend to the entire existing BellSouth CO facility inventory of AT&T intra-office wiring. This testing shall be performed by an AT&T technician, or by a BellSouth Certified Vendor. The verification and testing process may occur at any time after the delivery of the AT&T collocation space.

5.12.1.1 The testing procedures to be performed by the AT&T Technician or AT&T's BellSouth Certified Supplier shall include verification and testing of all power feeds associated with the intra-office wiring for the purpose of determining BDFB power feed assignments, BDFB relay rack number, BDFB panel, fuse #, drain/load (amps), and fuse size (amps). Whenever AT&T is responsible for either the installation, testing and/or maintenance of any power feeds that directly connects the AT&T collocation space to the BellSouth BDFB, these testing procedures will include verification and testing of all power feeds associated with the intra-office wiring for the purpose of determining BDFB power feed assignments, BDFB relay rack number, BDFB panel, fuse #, drain/load (amps), and fuse size (amps). This testing shall be performed by an AT&T Technician, or by a BellSouth Certified Supplier. The verification and testing process may occur at any time after the delivery of the AT&T collocation space.

5.12.1.2 The AT&T Technician or AT&T's BellSouth Certified Supplier will prepare a Method of Procedure ("MOP") per TR73503 and coordinate with the local BellSouth Network Operations for the BellSouth Premises to obtain access to the front of the BellSouth Common BDFB serving AT&T's Collocation Space. AT&T's Technician or its BellSouth Certified Supplier may operate the meter on the front of the BDFB to verify that the BDFB load(s) are within the engineered maximum load of 80% of the serving circuit breaker size (generally 180 Amps for a 225 Amp breaker). If AT&T's Technician or AT&T's BellSouth Certified Supplier discovers a load in excess of 67% of the serving circuit breaker size (generally 150 Amps for a 225 Amp breaker), AT&T agrees to notify BellSouth. Notification may be directed to the local BellSouth Network Operations for the BellSouth Premises, as well as to the BellSouth Account Representative assigned to AT&T, via e-mail. AT&T's Technician or AT&T's BellSouth Certified Supplier will not attempt to verify the BDFB meter reading via any other means, such as the use of a clamp-on ammeter. AT&T's Technician or AT&T's BellSouth Certified Supplier is not permitted to verify rectifier capacity, battery reserve, circuit breaker sizes, etc., that would require access to BellSouth's main power room.

5.12.2 AT&T shall have access to the demarcation point and all equipment and facilities on its side of the demarcation point. AT&T shall not have access to BellSouth's side of

the demarcation point. When troubles cannot be clearly isolated to BellSouth's facilities and equipment, BellSouth will agree to test cooperatively with AT&T to assist in trouble isolation to a specific Party's facilities and equipment as set forth in Section 2.3.13 of BellSouth's FCC Tariff No. 1. If AT&T performs testing of its facilities and submits a trouble ticket to BellSouth indicating a trouble exists on BellSouth's side of the demarcation, then BellSouth will perform the required testing on its side of the demarcation point to isolate the trouble reported by AT&T. If BellSouth does find that a trouble exists on its side of the demarcation point after it has performed the required testing of its facilities, then BellSouth will take the necessary action to repair its facilities to eliminate the trouble and AT&T will not be charged for submission of the trouble ticket. If BellSouth cannot locate any trouble on its side of the demarcation point, then BellSouth will assess AT&T the applicable Maintenance of Services charge as set forth in Section 13.3.1 of BellSouth's FCC Tariff No. 1, based on the amount of time, in half-hour increments, it takes a BellSouth technician to complete the appropriate testing. If, within thirty (30) calendar days of BellSouth's billing of the Maintenance of Services charge, AT&T performs its testing of the same facilities and finds that the trouble has not been eliminated and does not reside on AT&T's side of the demarcation point, then AT&T shall submit a second trouble ticket to BellSouth. If, after testing has been performed by BellSouth, the trouble is actually determined to be on BellSouth's side of the demarcation point, BellSouth will not charge AT&T for the submission of the trouble ticket. BellSouth shall also credit AT&T's account for the amount of the original Maintenance of Service charge on this same facility, within the next billing cycle.

5.13 <u>Process for Repair and Maintenance of Intra-Office Wiring</u>

5.13.1 As needed, BellSouth will cooperate fully with AT&T to test and trouble-shoot all intra-office wiring that goes through an IID, so that service troubles can be isolated to a particular intra-office wiring component and resolved by the Party with responsibility for that component.

5.13.2 In the event that an AT&T customer reports a repair and/or maintenance problem that requires testing of intra-office wiring and a BellSouth technician is needed to complete that test, the BellSouth technician will respond as soon as possible, but in any event in a timeframe no longer than that which BellSouth would apply when responding on a repair report from its own customer.

5.13.3 No trouble ticket may specify that the suspected faulty component is under the ownership of both Parties.

5.13.4 BellSouth is responsible for fixing problems with its wiring and/or equipment with minimal disruption to AT&T or AT&T customers.

5.14 <u>AT&T's Equipment and Facilities</u>. AT&T, or if required by this Attachment, AT&T's BellSouth Certified Supplier, is solely responsible for the design, engineering, installation, testing, provisioning, performance, monitoring, maintenance and repair of the equipment and facilities used by AT&T which must be performed in compliance

with all applicable BellSouth Specifications. Such equipment and facilities may include, but are not limited to, cable(s), equipment, and point of termination connections. AT&T and its designated BellSouth Certified Supplier must follow and comply with all BellSouth Specifications outlined in the following BellSouth Technical Requirements: TR 73503, TR 73519, TR 73572, and TR 73564.

5.15 BellSouth's Access to Collocation Space. From time to time, BellSouth may require access to AT&T's Collocation Space. BellSouth retains the right to access AT&T's space for the purpose of making BellSouth equipment and building modifications (e.g., running, altering or removing racking, ducts, electrical wiring, HVAC, and cabling). BellSouth will give notice to AT&T at least forty-eight (48) hours before access to AT&T's Collocation Space is required. AT&T may elect to be present whenever BellSouth performs work in AT&T's Collocation Space. The Parties agree that AT&T will not bear any of the expense associated with this type of work.

5.16 Access. Pursuant to Section 11, AT&T shall have access to its Collocation Space twenty-four (24) hours a day, seven (7) days a week. AT&T agrees to provide the name and social security number, date of birth, or driver's license number of each employee, supplier, or agent of AT&T or AT&T's Guest(s) that will be provided with access keys or cards (Access Keys), prior to the issuance of said Access Keys, using form RF-2906-C, the "CLEC and CLEC Certified Supplier Access Request and Acknowledgement" form. The appropriate key acknowledgement forms (the "Collocation Acknowledgement Sheet" for access cards and the "Key Acknowledgement Form" for keys) must be signed by AT&T and returned to BellSouth Access Management within fifteen (15) calendar days of AT&T's receipt. Failure to return these properly acknowledged forms will result in the holding of subsequent access key or card requests until the proper key acknowledgement documents have been received by BellSouth and reflect current information. Access Keys may not be duplicated under any circumstances. AT&T agrees to be responsible for all Access Keys and for the return of all Access Keys in the possession of AT&T's employees, suppliers, agents, or Guest(s) after termination of the employment relationship, the contractual obligation with AT&T ends, upon the termination of this Attachment, or upon the termination of occupancy of Collocation Space in a specific BellSouth Premises.

5.16.1 BellSouth will permit one (1) accompanied site visit to AT&T's designated Collocation Space, after receipt of the BFFO, without charge to AT&T. AT&T must submit to BellSouth the completed Access Control Request Form for all employees or agents requiring access to a BellSouth Premises at least thirty (30) calendar days prior to the date AT&T desires access to the Collocation Space. In order to permit reasonable access during construction of the Collocation Space, AT&T may submit a request for its one (1) accompanied site visit to its designated Collocation Space at any time subsequent to BellSouth's receipt of the BFFO. In the event AT&T desires access to the Collocation Space after submitting such a request, but prior to the approval of its access request, in addition to the first accompanied free visit, BellSouth shall permit AT&T to access the Collocation Space accompanied by a security escort, at AT&T's expense, which will be assessed pursuant to the Security Escort fees

contained in Exhibit B. AT&T must request escorted access to its designated Collocation Space at least three (3) business days prior to the date such access is desired.

5.17 Lost or Stolen Access Devices. AT&T shall notify BellSouth in writing immediately in the case of lost or stolen Access Keys. AT&T will reimburse BellSouth to replace lost or stolen Access Keys at the rates as set forth in Exhibit B of this Attachment. Should it become necessary for BellSouth to re-key buildings as a result of a lost Access Key(s) or for failure to return an Access Key(s), AT&T shall pay for all reasonable costs associated with the re-keying. AT&T must submit to BellSouth the completed Access Control Request Form (RF-2906-C) for all employees or agents requiring access to the BellSouth Premises a minimum of thirty (30) calendar days prior to the date AT&T desires access to the Collocation Space.

5.18 AT&T authorized personnel will have immediate access to health related facilities (e.g., bathrooms, eyewash stations, shower stations, drinking water, etc., within the BellSouth Premises), as well as to available parking.

5.19 Interference or Impairment. Notwithstanding any other provisions of this Attachment, AT&T shall not use any product or service provided under this Agreement, any other service related thereto or used in combination therewith, or place or use any equipment or facilities in any manner that 1) significantly degrades, interferes with or impairs service provided by BellSouth or any other entity or any person's use of its telecommunications services; 2) endangers or damages the equipment, facilities or any other property of BellSouth or any other entity or person; 3) compromises the privacy of any communications; or 4) creates an unreasonable risk of injury or death to any individual or to the public. If BellSouth reasonably determines that any equipment or facilities of AT&T violates the provisions of this paragraph, BellSouth shall provide written notice to AT&T, which shall direct AT&T to cure the violation within forty-eight (48) hours of AT&T's receipt of written notice or, at a minimum, to commence curative measures within twenty-four (24) hours and exercise reasonable diligence to complete such measures as soon as possible thereafter. After receipt of the notice, the Parties agree to consult immediately and, if necessary, to conduct an inspection of the Collocation Space.

5.19.1 Except in the case of the deployment of an advanced service which significantly degrades the performance of other advanced services or traditional voice band services, if AT&T fails to take curative action within forty-eight (48) hours or if the violation is of a character that poses an immediate and substantial threat of damage to property or injury or death to any person, or any other significant degradation, interference or impairment of BellSouth's or another entity's service, then and only in that event, BellSouth may take such action as it deems appropriate to correct the violation including, without limitation, the interruption of electrical power to AT&T's equipment and/or facilities. BellSouth will endeavor, but is not required, to provide notice to AT&T prior to the taking of such action and BellSouth shall have no liability to AT&T for any damages arising from such action, except to the extent that such action by BellSouth constitutes willful misconduct.

5.19.2 For purposes of this Section, the term "significantly degrades" shall be defined as an action that noticeably impairs a service from a user's perspective. In the case of the deployment of an advanced service which significantly degrades the performance of other advanced services or traditional voice band services and AT&T fails to take curative action within forty-eight (48) hours of AT&T's receipt of written notice, BellSouth will establish before the appropriate Commission that the technology deployment is causing the significant degradation. Any claims of network harm presented to AT&T or, if subsequently necessary, the Commission must be provided by BellSouth with specific and verifiable information. When BellSouth demonstrates that a certain technology deployed by AT&T is significantly degrading the performance of other advanced services or traditional voice band services, AT&T shall discontinue deployment of that technology and migrate its customers to other technologies that will not significantly degrade the performance of such services. Where the only degraded service itself is a known disturber, and the newly deployed technology satisfies at least one of the criteria for a presumption that it is acceptable for deployment under Section 47 C.F.R. 51.230, the degraded service shall not prevail against the newly-deployed technology.

5.20 Personalty and its Removal. Subject to requirements of this Attachment 4, AT&T may place or install in or on the Collocation Space such facilities and equipment, including storage for and spare equipment, as it deems desirable for the conduct of business, provided that such equipment is telecommunications equipment, and does not violate floor loading requirements, imposes or could impose or contains or could contain environmental conditions or hazards. Facilities and equipment placed by AT&T in the Collocation Space shall not become a part of the Collocation Space, even if nailed, screwed or otherwise fastened to the Collocation Space, but shall retain their status as personal property and may be removed by AT&T at any time. Any damage caused to the Collocation Space by AT&T's employees, suppliers, agents or representatives during the installation or removal of such property shall be promptly repaired by AT&T at its sole expense. If AT&T decides to remove equipment from its Collocation Space and the removal requires no physical work be performed by BellSouth and AT&T's physical work includes, but is not limited to, power reduction, cross-connects, or tie pairs, BellSouth will bill AT&T the applicable application fee as set forth in Section 6.3.1. This non-recurring fee will be billed on the date that BellSouth provides an Application Response to AT&T.

5.21 Alterations. Under no condition shall AT&T or any person acting on behalf of AT&T make any rearrangement, modification, augment, improvement, addition, and/or other alteration which could affect in any way space, power, HVAC, and/or safety considerations to the Collocation Space or the BellSouth Premises, without the express written consent of BellSouth, which shall not be unreasonably withheld. The cost of any such rearrangement, modification, augment, improvement, addition, and/or other alteration shall be paid by AT&T, and shall require a Subsequent Application and will result in the assessment of the applicable application fee as set forth in Section 6.3.1, which will be billed by BellSouth on the date that BellSouth provides AT&T with an Application Response.

5.22 Janitorial Service. AT&T shall be responsible for the general upkeep of its Collocation Space. AT&T shall arrange directly with a BellSouth Certified Supplier for janitorial services applicable to Caged Collocation Space. BellSouth shall provide a list of such suppliers on a BellSouth Premises-specific basis, upon request.

6. Ordering and Preparation of Collocation Space

6.1 If any state or federal regulatory agency imposes procedures or intervals applicable to AT&T and BellSouth that are different from the procedures or intervals set forth in this Section, whether now in effect or that become effective after execution of this Agreement, those procedures or intervals shall supersede the requirements set forth herein for that jurisdiction for all applications that are submitted for the first time after the effective date thereof.

6.2 Initial Application. For AT&T's initial equipment placement, AT&T shall input a Physical Expanded Interconnection Application Document (Initial Application) directly into BellSouth's electronic application (e.Application) system for processing. The Initial Application is considered Bona Fide when it is complete and accurate, meaning that all of the required fields on the application are completed with the appropriate type of information. An application fee will apply to each application submitted by AT&T and will be billed by BellSouth on the date BellSouth provides AT&T with an Application Response.

6.3 Subsequent Application. In the event AT&T or AT&T's Guest(s) desires to modify its use of the Collocation Space after a BFFO, AT&T shall complete an application (Subsequent Application) that contains all of the detailed information associated with the alteration related to the Collocation Space, as defined in Section 5.13 of this Attachment. The Subsequent Application will be considered Bona Fide when it is complete and accurate, meaning that all of the required fields on the Subsequent Application are completed with the appropriate type of information associated with the alteration. BellSouth shall determine what modifications, if any, to the BellSouth Premises are required to accommodate the change requested by AT&T in the application. Such modifications to the BellSouth Premises may include, but are not limited to, floor loading changes, changes necessary to meet HVAC requirements, changes to power plant requirements, equipment additions, etc.

6.3.1 Subsequent Application Fee. The application fee paid by AT&T shall be dependent upon the level of assessment needed. If the modification reflected on the Subsequent Application requires no labor or capital expenditure by BellSouth, but BellSouth must perform an assessment of the application to evaluate whether or not BellSouth would be required to perform necessary infrastructure or provisioning activities, then an Administrative Only Application Fee shall apply. This Administrative Only Application Fee would be applicable in instances such as those associated with a Transfer of Ownership of the Collocation Space, Removal of Equipment from the Collocation Space, a modification to an application prior to receipt of the BFFO and a

V to P Conversion (In Place). The fee for a Subsequent Application in which the modifications requested have limited effect (e.g., requires labor expenditure but no capital expenditure by BellSouth and where sufficient cable support structure, HVAC, power and terminations are available) shall be the Subsequent Application Fee, as set forth in Exhibit B. A modification involving capital expenditure by BellSouth shall require AT&T to submit the Subsequent Application with an Initial Application Fee.

To place an order for Direct Connects/CCXC, AT&T must submit an Initial Application or Subsequent Application. If no modification to the Collocation Spaces is requested other than the placement of Direct Connects or CCXCs, the Subsequent Application Fee for Direct Connect/CCXC, as defined in Exhibit B, will apply. If other modifications, in addition to the placement of Direct Connects/CCXCs are requested, either an Initial Application Fee or Subsequent Application Fee will apply.

If AT&T desires to reduce the amount of power that it has requested from BellSouth, AT&T must submit a Subsequent Application for this power reduction. If no other modifications to the Collocation Space are requested other than the reduction in power, the Power Reduction Only, Application fee, as set forth in Exhibit B, will apply. If other modifications are requested in addition to the reduction of power, the Subsequent Application Fee will apply.

The appropriate nonrecurring fee will be billed on the date BellSouth provides AT&T with an Application Response.

6.4 Space Preferences. If AT&T has previously requested and received a Space Availability Report for the BellSouth Premises, AT&T may submit up to three (3) space preferences on its application by identifying the specific space identification numbers referenced on the Space Availability Report for the space it is requesting. In the event BellSouth cannot accommodate AT&T's preference(s), AT&T may accept the space allocated by BellSouth or cancel its application and submit another application requesting additional space preferences for the same central office. This application will be treated as a new application and an application fee will apply. The application fee will be billed by BellSouth on the date that BellSouth provides AT&T with an Application Response.

6.5 At a minimum, BellSouth's space assignment policies and practices must meet the following principles: BellSouth's space assignment policies and practices must not materially increase AT&T's collocation costs; must not materially delay AT&T's occupation and use of BellSouth's Premises; must not assign physical collocation space that will impair the quality of service or impose other limitations on the service AT&T wishes to offer; and must not reduce unreasonably the total space available for physical collocation or preclude unreasonably physical collocation within BellSouth's Premises.

6.6 Space Availability Notification.

6.6.1 BellSouth will respond to an application within ten (10) calendar days as to whether space is available or not available within the requested BellSouth Premises. BellSouth will also respond as to whether the application is Bona Fide and if it is not Bona Fide, the items/revisions necessary to cause the application to become Bona Fide. If the amount of space requested is not available, BellSouth will notify AT&T of the amount of space that is available and no application fee will apply. If no or inadequate physical space is available, BellSouth will inform AT&T whether there is virtual collocation space available. If there is no physical or virtual collocation space available, BellSouth will inform AT&T, upon request, whether adjacent collocation space is available. Given the complexity of issues associated with adjacent collocation, the parties will negotiate a reasonable time for BellSouth to respond regarding adjacent collocation. When BellSouth's response includes an amount of space less than that requested by AT&T or space that is configured differently, no application fee will apply. If AT&T decides to accept the available space, AT&T must resubmit its application to reflect the actual space available, including the configuration of the space, prior to submitting a BFFO. When AT&T resubmits its application to accept the available space, BellSouth will bill AT&T the appropriate application fee.

6.6.2 Denial of Application. If BellSouth notifies AT&T that no space is available (Denial of Application), BellSouth will not assess an application fee to AT&T. After notifying AT&T that there is no available space in the requested BellSouth Premises, BellSouth will allow AT&T, upon request, to tour the entire BellSouth Premises within ten (10) calendar days of such Denial of Application. In order to schedule this tour within ten (10) calendar days, BellSouth must receive the request for a tour of the BellSouth Premises within five (5) calendar days of the Denial of the Application. Notwithstanding the foregoing, the Parties may agree to conduct a tour within thirty (30) calendar days of the Denial of Application.

6.7 Filing of Petition for Waiver. Upon Denial of Application, BellSouth will timely file a petition with the appropriate Commission pursuant to 47 U.S.C. § 251(c)(6). BellSouth shall provide to the Commission any information requested by that Commission. Such information shall include which space, if any, BellSouth or any of BellSouth's affiliates have reserved for future use and a detailed description of the specific future uses for which the space has been reserved. Subject to an appropriate nondisclosure agreement or provision, BellSouth shall permit AT&T to inspect any floor plans or diagrams that BellSouth provides to the Commission.

6.8 Waiting List. On a first-come, first-served basis, which is governed by the date of receipt of an application or Letter of Intent, BellSouth will maintain a waiting list of requesting telecommunication carriers that have either received a Denial of Application or, where it is publicly known that the BellSouth Premises is out of space, have submitted a Letter of Intent to collocate in that BellSouth Premises. BellSouth will notify each telecommunication carrier on the waiting list that can be accommodated by the amount of space that becomes available, according to the position of the telecommunication carrier on said waiting list.

6.8.1 When physical Collocation Space becomes available, AT&T must submit an updated, complete, and accurate application to BellSouth within thirty (30) calendar days of notification by BellSouth that physical Collocation Space will be available in the requested BellSouth Premises previously out of space. If AT&T has originally requested caged Collocation Space and cageless Collocation Space becomes available, AT&T may refuse such space and notify BellSouth in writing within the thirty (30) day timeframe that AT&T wants to maintain its place on the waiting list for caged Physical Collocation Space, without accepting the available cageless Collocation Space.

6.8.1.1 AT&T may accept an amount of space less than what it originally requested by submitting an application as set forth above, and upon request, may maintain its position on the waiting list for the remaining space that was initially requested. If AT&T does not submit an application or notify BellSouth in writing as described above, BellSouth will offer the space to the next telecommunication carrier on the waiting list and remove AT&T from the waiting list. Upon request, BellSouth will advise AT&T as to its position on the waiting list.

6.9 Public Notification. BellSouth will maintain on its Interconnection Services website a notification document that will indicate all BellSouth Premises that are without available space. BellSouth shall update such document within ten (10) calendar days of the date that BellSouth becomes aware that insufficient space is available to accommodate physical collocation. BellSouth will also post a document on its Interconnection Services website that contains a general notice when space becomes available in a BellSouth Premises previously on the space exhaust list.

6.10 Application Response.

6.10.1 When space has been determined to be available for physical (caged or cageless) arrangements, BellSouth will provide an Application Response within twenty (20) calendar days of receipt of a Bona Fide Application. The Application Response will include, at a minimum, the configuration of the space, the Cable Installation Fee, Cable Records Fee, and any other applicable space preparation fees, as described in Section 8.

6.11 Application Modifications.

6.11.1 If a modification or revision is made to any information in the Bona Fide Application prior to a BFFO, with the exception of modifications to (1) Customer Information, (2) Contact Information or (3) Billing Contact Information, the application shall be considered a new application and handled as a new application with respect to the response and provisioning intervals. BellSouth will charge AT&T the appropriate application fee associated with the level of assessment performed by BellSouth. The fee paid by AT&T, if any, for its request to modify the use of the Collocation Space shall be dependent upon the modification requested as set forth in Section 6.3.1 of this Attachment.

6.12 Bona Fide Firm Order.

6.12.1 AT&T shall indicate its intent to proceed with equipment installation in a BellSouth Premises by submitting a Bona Fide Firm Order (BFFO) to BellSouth. The BFFO must be received by BellSouth no later than thirty (30) calendar days after BellSouth's Application Response to AT&T's Bona Fide Application or AT&T's application will expire.

6.12.2 The firm order date will be the date BellSouth is in receipt of AT&T's BFFO. BellSouth will acknowledge the receipt of AT&T's BFFO within seven (7) calendar days of receipt, so that AT&T will have positive confirmation from BellSouth that its BFFO has been received. BellSouth's response to a BFFO will include a Firm Order Confirmation, which contains the firm order date. No revisions can be made to a BFFO.

7. Construction and Provisioning

7.1 Construction and Provisioning Intervals.

7.1.1 BellSouth will complete construction for physical caged Collocation Space under ordinary conditions as soon as possible within a maximum of ninety (90) calendar days from receipt of a BFFO or as agreed to by the Parties. BellSouth will complete construction for physical cageless Collocation Space under ordinary conditions as soon as possible within a maximum of sixty (60) calendar days from receipt of a BFFO and ninety (90) calendar days from receipt of a BFFO for extraordinary conditions, or as agreed to by the Parties. Ordinary conditions are defined as space available with only minor changes required to BellSouth's support systems (Examples include, but are not limited to: minor modifications to HVAC, cabling and BellSouth's power plant). Extraordinary conditions include, but may not be limited to: major BellSouth equipment rearrangements or additions; power plant additions or upgrades; major mechanical additions or upgrades; major upgrades for ADA compliance; environmental hazards or hazardous materials abatement; and arrangements for which equipment shipping intervals are extraordinary in length. Time for permitting is included in ordinary or extraordinary conditions construction intervals. The Parties may mutually agree to renegotiate an alternative provisioning interval or BellSouth may seek a waiver from the ordered interval from the appropriate Commission.

7.1.2 When AT&T adds equipment within initial demand parameters that requires no additional space preparation work on the part of BellSouth, then no additional charges or intervals will be imposed by BellSouth that would cause delay in AT&T's operation.

7.2 Joint Planning. Joint planning between BellSouth and AT&T will commence within a maximum of twenty (20) calendar days from BellSouth's receipt of a BFFO. BellSouth will provide the preliminary design of the Collocation Space and the equipment configuration requirements as reflected in the Bona Fide Application and BFFO. The Collocation Space completion interval as already provided for in Section 7.1 will not change.

7.3 Permits. Each Party, its agent(s) or BellSouth Certified Supplier(s) will file for the appropriate permits required for the scope of work to be performed by that Party, its agent(s) or BellSouth Certified Supplier(s) within ten (10) calendar days of the completion of the finalized construction design and specifications.

7.4 Acceptance Walkthrough. AT&T will schedule and complete an acceptance walkthrough of the Collocation Space with BellSouth within fifteen (15) calendar days after the Space Ready Date. In the event AT&T fails to complete an acceptance walkthrough within this fifteen (15) day interval, the Collocation Space shall be deemed accepted by AT&T on the Space Ready Date. BellSouth will correct any deviations to AT&T's original or jointly amended design and/or specification requirements within seven (7) calendar days after the walkthrough, unless the Parties mutually agree upon a different timeframe.

7.5 Circuit Facility Assignments (CFAs). Unless otherwise specified, BellSouth will provide CFAs to AT&T prior to the applicable provisioning interval set forth herein (Provisioning Interval) for those BellSouth Premises in which AT&T has physical Collocation Space with no POT bay or with a grand fathered POT bay provided by BellSouth. BellSouth cannot provide CFAs to AT&T prior to the Provisioning Interval for those BellSouth Premises in which AT&T has physical Collocation Space with a POT bay provided by AT&T or virtual Collocation Space, until AT&T provides BellSouth with the following information:

For physical Collocation Space with an AT&T-provided POT bay, AT&T shall provide BellSouth with a complete layout of the POT panels on an equipment inventory update (EIU) form, showing locations, speeds, etc.

For virtual Collocation Space, AT&T shall provide BellSouth with a complete layout of AT&T's equipment on an equipment inventory update (EIU) form, including the locations of the low speed ports and the specific frame terminations to which the equipment will be wired by AT&T's BellSouth Certified Supplier.

7.5.1 BellSouth cannot begin work on the CFAs until the complete and accurate EIU form is received from AT&T. If the EIU form is provided within ten (10) calendar days prior to the ending date of the Provisioning Interval, then the CFAs will be made available by the ending date of the Provisioning Interval. If the EIU form is not received ten (10) calendar days prior to the ending date of the Provisioning Interval, then the CFAs will be provided within ten (10) calendar days of receipt of the EIU form.

7.5.2 BellSouth will bill AT&T a nonrecurring charge, as set forth in Exhibit B, each time AT&T requests a resend of its CFAs for any reason other than a BellSouth error in the CFAs initially provided to AT&T. These resends shall mirror the original CFA.

7.5.3 Use of BellSouth Certified Supplier. AT&T shall select a supplier which has been approved as a BellSouth Certified Supplier to perform all engineering and installation work. AT&T and AT&T's BellSouth Certified Supplier must follow and comply with all of BellSouth's Specifications, as outlined in the following BellSouth Technical

Requirements: TR 73503, TR 73519, TR 73572, and TR 73564. In some cases, AT&T must select different BellSouth Certified Suppliers for those work activities associated with transmission equipment, switching equipment and power equipment. BellSouth shall provide AT&T with a list of BellSouth Certified Suppliers upon request. The BellSouth Certified Supplier(s) shall be responsible for installing AT&T's equipment and associated components, extending power cabling to the BellSouth power distribution frame, performing operational tests after installation is completed, and notifying BellSouth's equipment engineers and AT&T upon successful completion of the installation, etc. The BellSouth Certified Supplier shall bill AT&T directly for all work performed for AT&T pursuant to this Attachment. BellSouth shall have no liability for, nor responsibility to pay, such charges imposed by AT&T's BellSouth Certified Supplier. BellSouth shall make available its supplier certification program to AT&T or any supplier proposed by AT&T and will not unreasonably withhold certification. All work performed by or for AT&T shall conform to generally accepted industry standards.

7.6 Alarm and Monitoring. BellSouth shall place environmental alarms in the BellSouth Premises for the protection of BellSouth equipment and facilities. AT&T shall be responsible for the placement, monitoring and removal of environmental and equipment alarms used to service AT&T's Collocation Space. Upon request, BellSouth will provide AT&T with an applicable tariffed service(s) to facilitate remote monitoring of collocated equipment by AT&T. Both Parties shall use best efforts to notify the other of any verified environmental condition known to that Party.

7.7 Virtual to Physical Collocation Relocation. In the event physical Collocation Space was previously denied at a BellSouth Premises due to technical reasons or space limitations and physical Collocation Space has subsequently become available, AT&T may relocate its existing virtual collocation arrangement(s) to a physical collocation arrangement(s) and pay the appropriate fees associated with physical Collocation Space and the rearrangement or reconfiguration of services currently being terminated in the virtual collocation arrangement If BellSouth knows when additional space for physical collocation may become available at the BellSouth Premises requested by AT&T, such information will be provided to AT&T in BellSouth's written denial of physical Collocation Space. To the extent that (i) physical Collocation Space becomes available to AT&T within one hundred eighty (180) calendar days of BellSouth's written denial of AT&T's request for physical Collocation Space, (ii) BellSouth had knowledge that the space was going to become available, and (iii) AT&T was not informed in the written denial that physical Collocation Space would become available within such one hundred eighty (180) calendar day period, then AT&T may relocate its virtual collocation arrangement to a physical collocation arrangement and will receive a credit for any nonrecurring charges previously paid for such virtual Collocation Space. AT&T must arrange with a BellSouth Certified Supplier for the relocation of equipment from its virtual Collocation Space to its physical Collocation Space and will bear the cost of such relocation.

7.8 Virtual to Physical Conversion (In-Place). Virtual collocation arrangements may be converted to "in-place" physical collocation arrangements if the potential conversion

meets all of the following criteria: 1) there is no change in the amount of equipment or the configuration of the equipment that was in the virtual Collocation Space; 2) the conversion of the virtual collocation arrangement will not cause the equipment or the results of that conversion to be located in a space that BellSouth has reserved for its own future needs; 3) the converted arrangement does not limit BellSouth's ability to secure its own equipment and facilities due to the location of the virtual Collocation Space; and 4) any changes to the arrangement can be accommodated by existing power, HVAC, and other requirements. Unless otherwise specified, BellSouth will complete virtual to physical conversions (in-place) within sixty (60) calendar days from receipt of the BFFO. The charges for a Virtual to Physical Conversion (In-Place), if any, are set forth in Section 6.3.1 of this Attachment.

7.9 Cancellation. If at any time prior to space acceptance, AT&T cancels its order for Collocation Space(s) (Cancellation), BellSouth will bill the applicable nonrecurring rate(s) as set forth in Exhibit B for any and all work processes for which work has begun or been completed. In no event will the charges billed by BellSouth exceed the maximum amount AT&T would have otherwise paid for the work undertaken by BellSouth if no cancellation of the order had occurred.

7.10 Licenses. AT&T, at its own expense, will be solely responsible for obtaining from the proper governmental authorities, and any other appropriate agency, entity, or person, all rights, privileges, permits, licenses, and certificates necessary or required to operate as a provider of telecommunication services to the public or to build-out, equip and/or occupy Collocation Space in a BellSouth Premises.

7.11 Environmental Compliance. The Parties agree to utilize and adhere to the Environmental Hazard Guidelines identified in Exhibit A attached hereto.

8 Rates and Charges

8.1 Application Fee. BellSouth shall assess a nonrecurring application fee via a service order on the date BellSouth responds pursuant to Section 6.10 (Application Response).

8.2 Cable Installation. Cable Installation Fee(s) are assessed per entrance cable placed. This nonrecurring fee will be billed by BellSouth upon receipt of AT&T's BFFO.

8.3 Space Preparation. Space preparation fees consist of a nonrecurring charge for Firm Order Processing and monthly recurring charges for Central Office Modifications assessed per arrangement, per square foot and Common Systems Modifications assessed per arrangement, per square foot for cageless collocation and per cage for caged collocation. AT&T shall remit payment of the nonrecurring Firm Order

Processing fee coincident with the submission of a BFFO. These charges recover the costs associated with preparing the Collocation Space, which includes, but is not limited to, the following items: a survey, engineering of the Collocation Space, design and modification costs for network, building and support systems, etc. In the event AT&T opts for cageless space, the space preparation fees will be assessed based on the total square footage of floor space dedicated to AT&T as prescribed in this Section. BellSouth will reimburse AT&T in an amount equal to AT&T's reasonable, demonstrative and mitigated expenditures incurred as a direct result of delays to the completion and turnover dates caused by BellSouth, but only to the extent such expenditures are not recovered through Service Quality Measurements and remedies contained in this Agreement.

8.4 Floor Space. The Floor Space Charge includes reasonable charges for lighting, HVAC, and other allocated expenses associated with maintenance of the BellSouth Premises, but does not include any power-related costs incurred by BellSouth. When the Collocation Space is enclosed, AT&T shall pay floor space charges based upon the number of square feet so enclosed. The minimum size for caged Collocation Space is 100 square feet. Additional caged Collocation Space may be requested in increments of 50 square feet. When the Collocation Space is not enclosed, AT&T shall pay floor space charges based upon the following floor space calculation: [(depth of the equipment lineup in which the rack is placed) + (0.5 x maintenance aisle depth) + (0.5 x wiring aisle depth)] x (width of rack and spacers). For purposes of this calculation, the depth of the equipment lineup shall consider the footprint of equipment racks plus any equipment overhang. BellSouth will assign unenclosed Collocation Space in conventional equipment rack lineups where feasible. In the event AT&T's collocated equipment requires special cable racking, isolated grounding or other treatment which prevents placement within conventional equipment rack lineups, AT&T shall be required to request an amount of floor space sufficient to accommodate the total equipment arrangement.

8.5 Power. BellSouth shall make available –48 Volt (-48V) Direct Current (DC) power for AT&T's Collocation Space at a BellSouth Power Board or BellSouth Battery Distribution Fuse Bay (BDFB) upon AT&T's request within the BellSouth Premises; however the determination of whether BellSouth will permit the power configuration requested by AT&T will be made at BellSouth's sole discretion, which shall not be unreasonably withheld. BellSouth will revise AT&T's recurring power charges to reflect a power upgrade upon notification of the completion of the upgrade by AT&T's BellSouth Certified Vendor. BellSouth will revise recurring power charges to reflect a power reduction upon BellSouth's receipt of the Power Reduction Form from AT&T certifying the completion of the power reduction work, including the removal of the power cabling by AT&T's BellSouth Certified Supplier.

8.5.1 When obtaining power from a BDFB, fuses and power cables (A&B) must be engineered (sized), and installed by AT&T's BellSouth Certified Supplier. Likewise, when

obtaining power from a BellSouth power board, power cables (A&B) must be engineered (sized) and installed by AT&T's BellSouth Certified Supplier, who is qualified to work on the power board. AT&T is responsible for contracting with a BellSouth Certified Supplier for the power distribution feeder cable running from a BellSouth BDFB or BellSouth power board to AT&T's equipment. The determination of whether AT&T's requested DC power will be provided from the BellSouth BDFB or BellSouth power board will be made at BellSouth's sole, but reasonable, discretion. The BellSouth Certified Supplier contracted by AT&T must provide BellSouth with a copy of the engineering power specifications prior to the day on which AT&T's equipment becomes operational (Commencement Date). BellSouth will provide the common power feeder cable support structure between the BellSouth BDFB or BellSouth power board and AT&T's Collocation Space. AT&T shall contract with a BellSouth Certified Supplier who will be responsible for the following power provisioning activities: installing, removing or replacing dedicated power cable support structure within AT&T's arrangement, power cable feeds, and terminations of cable. A BellSouth Certified Supplier, who is qualified to work on the power board, must perform all termination at a BellSouth power board. AT&T shall comply with all applicable National Electric Code (NEC), BellSouth TR73503, Telcordia and ANSI Standards regarding power cabling, installation, and maintenance.

8.5.2 Fused Amp Billing. BellSouth shall make available -48V DC power on a per fused amp, per month basis, pursuant to the following:

8.5.2.1 For power provisioned from a BDFB. The number of fused amps requested by AT&T on its application for power that is being provisioned from a BellSouth BDFB will be multiplied by the DC power fused amp rate set forth in Exhibit B. A minimum of ten (10) fused amps is required.

8.5.2.2 For existing power configurations that are provisioned from BellSouth's main power board. The number of fused amps made available at the main power board, in increments of two hundred and twenty-five (225) amps/main power board circuit, will be multiplied by the DC power fused amp rate set forth in Exhibit B.

8.5.3 If AT&T elects to install its own DC Power Plant, BellSouth shall provide Alternating Current (AC) power to feed AT&T's DC Power Plant. Charges for AC power will be assessed per breaker ampere per month. Rates include the provision of commercial and standby AC power. When obtaining power from a BellSouth service panel, protection devices and power cables must be engineered (sized) and installed by AT&T's BellSouth Certified Supplier, except that BellSouth shall engineer and install protection devices and power cables for Adjacent Collocation. AT&T's BellSouth Certified Supplier must also provide a copy of the engineering power Specifications prior to the Commencement Date. Charges for AC power shall be assessed pursuant to the rates specified in Exhibit B. AC power voltage and phase ratings shall be determined on a per location basis. At AT&T's option, AT&T may arrange for AC power in an adjacent collocation arrangement from a retail provider of electrical power.

8.6 AT&T has the option to purchase power directly from an electric utility company where technically feasible and where space is available in a requested BellSouth Premises. Under such option, AT&T is responsible for contracting with the electric utility company for its own power feed and meter, and is financially responsible for purchasing all equipment necessary to accomplish the conversion of the commercial AC power to DC power, including inverters, batteries, power boards, bus bars, BDFBs, backup power supplies and power cabling. The actual work to install this arrangement must be performed by a BellSouth Certified Supplier hired by AT&T. AT&T's BellSouth Certified Supplier must comply with all applicable national, regional, state and local safety, electrical, fire and building codes, including the NESC standards, in the installing of this power arrangement, just as BellSouth is required to comply with these codes. AT&T must submit an application to BellSouth for the appropriate amount of Collocation Space that AT&T requires in order to install this type of power arrangement. BellSouth will evaluate the request and determine if the appropriate amount of space is available within the BellSouth Premises for the installation of AT&T's power equipment and facilities. This type of power arrangement must be located in an appropriate area in the BellSouth Premises that has been properly conditioned for the installation of power equipment and conforms to the applicable national, regional, state and local safety, electrical, fire and building codes. BellSouth shall waive the application fee or any other nonrecurring charge that would otherwise be due from a CLEC that decides to reconfigure an existing collocation power arrangement so as to purchase power directly from an electric utility company as provided herein. AT&T shall be responsible for the recurring charges associated with the additional space needed in the BellSouth Premises for this type of power arrangement, including space required to place associated power-related equipment and facilities (i.e., batteries, generator, fuse panel, power meter, etc.). If there is no space available for this type of power arrangement in the requested BellSouth Premises, BellSouth may seek a waiver of these requirements from the Commission for the BellSouth Premises requested. AT&T would have the option to order its power needs directly from BellSouth.

8.7 Security Escort. A security escort will be required whenever AT&T or its approved agent desires access to the entrance manhole or must have access to a BellSouth Premises after the one (1) accompanied site visit allowed pursuant to Section 5.9 prior to completing BellSouth's Security Training requirements. The rates for security escort service are assessed, beginning with the scheduled escort time, pursuant to the fee schedule in Exhibit B. BellSouth will wait for one-half (1/2) hour after the scheduled time for such an escort and AT&T shall pay for such half-hour charges in the event AT&T fails to show up.

8.8 Cable Record charges. These charges apply for work required to add or change existing cable records assigned to AT&T in BellSouth's database systems. The VG/DS0 per cable record charge is for a maximum of 3600 records. The Fiber cable record charge is for a maximum of 99 records. The Cable Record charges are assessed as nonrecurring fees in all BellSouth states, other than Louisiana, and will be billed upon receipt of AT&T's BFFO.

8.9 Other. If no rate is identified in the contract, the rate for the specific service or function will be negotiated by the Parties upon request by either Party.

9. Mechanics Liens

9.1 If any mechanics lien or other liens shall be filed against property of either Party (BellSouth or AT&T), or any improvement thereon by reason of or arising out of any labor or materials furnished or alleged to have been furnished or to be furnished to or for the other Party or by reason of any changes, or additions to said property made at the request or under the direction of the other Party, the other Party directing or requesting those changes shall, within thirty (30) business days after receipt of written notice from the Party against whose property said lien has been filed, either pay such lien or cause the same to be bonded off the affected property in the manner provided by law. The Party causing said lien to be placed against the property of the other shall also defend, at its sole cost and expense, on behalf of the other, any action, suit or proceeding which may be brought for the enforcement of such liens and shall pay any damage and discharge any judgment entered thereon.

10. Inspections

10.1 BellSouth may conduct an inspection of AT&T's equipment and facilities in the Collocation Space(s) prior to the activation of facilities between AT&T's equipment and equipment of BellSouth. BellSouth may conduct an inspection if AT&T adds equipment and may otherwise conduct routine inspections at reasonable intervals mutually agreed upon by the Parties. BellSouth shall provide AT&T with a minimum of forty-eight (48) hours or two (2) business days, whichever is greater, advance notice of all such inspections. All costs of such inspection shall be borne by BellSouth.

11. Security and Safety Requirements

11.1 Unless otherwise specified, AT&T will be required, at its own expense, to conduct a statewide investigation of criminal history records for each AT&T employee hired in the past five (5) years being considered for work on the BellSouth Premises, for the states/counties where the AT&T employee has worked and lived for the past five years. Where state law does not permit statewide collection or reporting, an investigation of the applicable counties is acceptable. AT&T shall not be required to perform this investigation if an affiliated company of AT&T has performed an investigation of the AT&T employee seeking access, if such investigation meets the criteria set forth above. This requirement will not apply if AT&T has performed a pre-employment statewide investigation of criminal history records of the AT&T employee for the states/counties where the AT&T employee has worked and lived for the past five years or, where state law does not permit a statewide investigation, an investigation of the applicable counties.

11.2 AT&T will be required to administer to its personnel assigned to the BellSouth Premises security training either provided by BellSouth, or meeting criteria defined by BellSouth.

11.3 AT&T shall provide its employees and agents with picture identification, which must be worn and visible at all times while in the Collocation Space or other areas in or around the BellSouth Premises. The photo identification card shall bear, at a minimum, the employee's name and photo and AT&T's name. BellSouth reserves the right to remove from a BellSouth Premises any employee of AT&T not possessing identification issued by AT&T or who has violated any of BellSouth's policies as outlined in the CLEC Security Training documents. AT&T shall hold BellSouth harmless for any damages resulting from such removal of its personnel from a BellSouth Premises. AT&T shall be solely responsible for ensuring that any Guest(s) of AT&T is in compliance with all subsections of this Section.

11.4 AT&T shall not assign to the BellSouth Premises any personnel with records of felony criminal convictions. AT&T shall not assign to the BellSouth Premises any personnel with records of misdemeanor convictions, except for misdemeanor traffic violations, without advising BellSouth of the nature and gravity of the offense(s). BellSouth reserves the right to refuse building access to any AT&T personnel who have been identified to have misdemeanor criminal convictions. Notwithstanding the foregoing, in the event that AT&T chooses not to advise BellSouth of the nature and gravity of any misdemeanor conviction, AT&T may, in the alternative, certify to BellSouth that it shall not assign to the BellSouth Premises any personnel with records of misdemeanor convictions (other than misdemeanor traffic violations).

11.4.1 AT&T shall not knowingly assign to the BellSouth Premises any individual who was a former employee of BellSouth and whose employment with BellSouth was terminated for a criminal offense whether or not BellSouth sought prosecution of the individual for the criminal offense.

11.4.2 AT&T shall not knowingly assign to the BellSouth Premises any individual who was a former supplier of BellSouth and whose access to a BellSouth Premises was revoked

due to commission of a criminal offense whether or not BellSouth sought prosecution of the individual for the criminal offense.

11.5 For each AT&T employee or agent hired by AT&T within five years of being considered for work on the BellSouth Premises, who requires access to a BellSouth Premises pursuant to this Attachment, AT&T shall furnish BellSouth, prior to an employee or agent gaining such access, a certification that the aforementioned background check and security training were completed. The certification will contain a statement that no felony convictions were found and certify that the employee completed the security training. If the employee's criminal history includes misdemeanor convictions, AT&T will disclose the nature of the convictions to BellSouth at that time. In the alternative, AT&T may certify to BellSouth that it shall not assign to the BellSouth Premises any personnel with records of misdemeanor convictions other than misdemeanor traffic violations.

11.5.1 For all other AT&T employees requiring access to a BellSouth Premises pursuant to this Attachment, AT&T shall furnish BellSouth, prior to an employee gaining such access, a certification that the employee is not subject to the requirements of Section 11.5 above and that security training was completed by the employee.

11.6 At BellSouth's request, AT&T shall promptly remove from the BellSouth Premises any employee of AT&T BellSouth does not wish to grant access to a BellSouth Premises 1) pursuant to any investigation conducted by BellSouth or 2) prior to the initiation of an investigation if an employee of AT&T is found interfering with the property or personnel of BellSouth or another collocated telecommunications carrier, provided that an investigation shall promptly be commenced by BellSouth.

11.7 Security Violations. BellSouth reserves the right to interview AT&T's employees, agents, or suppliers in the event of wrongdoing in or around BellSouth's property or involving BellSouth's or another collocated telecommunications carrier's property or personnel, provided that BellSouth shall provide reasonable notice to AT&T's Security representative of such interview and arranges for AT&T's Security Personnel to participate. AT&T and its suppliers shall reasonably cooperate with BellSouth's investigation into allegations of wrongdoing or criminal conduct committed by, witnessed by, or involving AT&T's employees, agents, or suppliers. AT&T's security personnel will make themselves available within a reasonable period of time. Additionally, BellSouth reserves the right to bill AT&T for all reasonable costs associated with investigations involving its employees, agents, or suppliers if it is established and mutually agreed in good faith that AT&T's employees, agents, or suppliers are responsible for the alleged act. BellSouth shall bill AT&T for BellSouth property, which is stolen or damaged where an investigation determines the culpability of AT&T's employees, agents, or suppliers and where AT&T agrees, in good faith, with the results of such investigation. AT&T shall notify BellSouth in writing immediately in the event that AT&T discovers one of its employees already working on the BellSouth Premises is a possible security risk. Upon request of the other Party, the Party who is the employer shall discipline consistent with its employment practices, up to and including removal from BellSouth's Premises, any employee found to have

violated the security and safety requirements of this Section. AT&T shall not hold BellSouth harmless for any damages resulting from such removal of its personnel from a BellSouth Premises.

11.8 Use of Supplies. Unauthorized use of equipment, supplies or other property by either Party, whether or not used routinely to provide telephone service will be strictly prohibited and handled appropriately. Costs associated with such unauthorized use may be charged to the offending Party, as may be all associated investigative costs.

11.9 Use of Official Lines. Except for non-toll calls necessary in the performance of their work, neither Party shall use the telephones of the other Party on BellSouth's Premises. Charges for unauthorized telephone calls may be charged to the offending Party, as may be all associated investigative costs.

11.10 Accountability. Full compliance with the Security requirements of this Section shall in no way limit the accountability of either Party to the other for the improper actions of its employees.

11.11 BellSouth shall not use any information it collects in the course of implementing or operating security arrangements or other activities for marketing or any other purpose.

11.12 BellSouth shall exercise the same level of care it provides to itself to prevent harm or damage to AT&T, its employees, agents or end users, or their property. BellSouth agrees to take reasonable and prudent steps to ensure the adequate protection of AT&T property located within BellSouth Premises including, but not limited to:

11.12.1 Where AT&T's equipment is in a separate caged space, not allowing the same code or key that opens the external doors to the collocation space to also operate the doors to AT&T's collocation cage.

11.12.2 Ensure that the Central Office that houses AT&T's equipment where AT&T has provisioned Collocation Space is monitored to prevent unauthorized entry.

11.12.3 Assuring that the physical security and the means of ingress and admission to spaces that house AT&T equipment or equipment enclosures are equal to or exceed those provided for BellSouth pursuant to BellSouth admissions practices.

11.12.4 Installing security studs in the hinge plates of doors having exposed hinges with removable pins if such leads to spaces that contain or house AT&T equipment or equipment enclosures.

11.12.5 Controlling access from passenger and freight elevators by continuous surveillance or by installing security partitions, security grills, locked gates or doors between elevator lobbies and spaces that contain or house AT&T equipment or equipment enclosures.

11.12.6 BellSouth will provide notification to designated personnel of an actual or attempted security breach of AT&T's Collocation Space, upon BellSouth discovery of such breach.

12. Destruction of Collocation Space

12.1 In the event a Collocation Space is wholly or partially damaged by fire, windstorm, tornado, flood or by similar causes to such an extent as to be rendered wholly unsuitable for AT&T's permitted use hereunder, then either Party may elect within ten (10) calendar days after such damage, to terminate occupancy of the damaged Collocation Space, and if either Party shall so elect, by giving the other written notice of termination, both Parties shall stand released of and from further liability under the terms hereof. If the Collocation Space shall suffer only minor damage and shall not be rendered wholly unsuitable for AT&T's permitted use, or is damaged and the option to terminate is not exercised by either Party, BellSouth covenants and agrees to proceed promptly without expense to AT&T, except for improvements not to the property of BellSouth, to repair the damage. BellSouth shall have a reasonable time within which to rebuild or make any repairs, and such rebuilding and repairing shall be subject to delays caused by storms, shortages of labor and materials, government regulations, strikes, walkouts, and causes beyond the control of BellSouth, which causes shall not be construed as limiting factors, but as exemplary only. AT&T may, at its own expense, accelerate the rebuild of its collocated space and equipment provided however that a BellSouth Certified Supplier is used and the necessary space preparation has been completed. If AT&T's acceleration of the project increases the cost of the project, then those additional charges will be incurred by AT&T. Where allowed and where practical, AT&T may erect a temporary facility while BellSouth rebuilds or makes repairs. In all cases where the Collocation Space shall be rebuilt or repaired, AT&T shall be entitled to an equitable abatement of rent and other charges, depending upon the unsuitability of the Collocation Space for AT&T's permitted use, until such Collocation Space is fully repaired and restored and AT&T's equipment installed therein (but in no event later than thirty (30) calendar days after the Collocation Space is fully repaired and restored). Where AT&T has placed an Adjacent Arrangement pursuant to Section 3.4, AT&T shall have the sole responsibility to repair or replace said Adjacent Arrangement provided herein. Pursuant to this Section, BellSouth will restore the associated services to the Adjacent Arrangement.

13. Eminent Domain

13.1 If the whole of a Collocation Space or Adjacent Arrangement shall be taken by any public authority under the power of eminent domain, then this Attachment shall terminate with respect to such Collocation Space or Adjacent Arrangement as of the day possession shall be taken by such public authority and rent and other charges for the Collocation Space or Adjacent Arrangement shall be paid up to that day with proportionate refund by BellSouth of such rent and charges as may have been paid in advance for a period subsequent to the date of the taking. If any part of the Collocation Space or Adjacent Arrangement shall be taken under eminent domain, BellSouth and AT&T shall each have the right to terminate this Attachment with respect to such Collocation Space or Adjacent Arrangement and declare the same null and void, by written notice of such intention to the other Party within ten (10) calendar days after such taking.

14. Relocation of AT&T's Equipment

14.1 Except as otherwise stated in this Agreement, BellSouth shall use its best efforts to prevent AT&T from having to relocate its equipment during the term of this Agreement. If AT&T, at BellSouth's request, agrees to relocate its equipment, then BellSouth shall reimburse AT&T for any and all costs reasonably associated with such relocation.

15. Nonexclusivity

15.1 AT&T understands that this Attachment is not exclusive and that BellSouth may enter into similar agreements with other Parties. Assignment of space pursuant to all such agreements shall be determined by space availability and made on a first come, first served basis.

ENVIRONMENTAL AND SAFETY PRINCIPLES

The following principles provide basic guidance on environmental and safety issues when applying for and establishing Physical Collocation arrangements.

1. GENERAL PRINCIPLES

1.1 Compliance with Applicable Law. BellSouth and AT&T agree to comply with applicable federal, state, and local environmental and safety laws and regulations including U.S. Environmental Protection Agency (USEPA) regulations issued under the Clean Air Act (CAA), Clean Water Act (CWA), Resource Conservation and Recovery Act (RCRA), Comprehensive Environmental Response, Compensation and Liability Act (CERCLA), Superfund Amendments and Reauthorization Act (SARA), the Toxic Substances Control Act (TSCA), and OSHA regulations issued under the Occupational Safety and Health Act of 1970, as amended and NFPA and National Electrical Codes (NEC) and the NESC (Applicable Laws). Each Party shall notify the other if compliance inspections are conducted by regulatory agencies and/or citations are issued that relate to any aspect of this Attachment.

1.2 Notice. BellSouth and AT&T shall provide notice to the other, including Material Safety Data Sheets (MSDSs), of known and recognized physical hazards or Hazardous Chemicals existing on site or brought on site. A Hazardous Chemical inventory list is posted on an OSHA Poster and updated annually at each Central Office. This Poster is normally located near the front entrance of the building or in the lounge area. Each Party is required to provide specific notice for known potential Imminent Danger conditions. AT&T should contact 1-800-743-6737 for any BellSouth MSDS required.

1.3 Practices/Procedures. BellSouth may make available additional environmental control procedures for AT&T to follow when working at a BellSouth Premises (See Section 2, below). These practices/procedures will represent the regular work practices required to be followed by the employees and suppliers of BellSouth for environmental protection. AT&T will require its suppliers, agents and others accessing the BellSouth Premises to comply with these practices. Section 2 lists the Environmental categories where BST practices should be followed by AT&T when operating in the BellSouth Premises.

1.4 Environmental and Safety Inspections. BellSouth reserves the right to inspect the AT&T space with proper notification. BellSouth reserves the right to stop any AT&T work operation that imposes Imminent Danger to the environment, employees or other persons in the area on BellSouth's Premises.

1.5 Hazardous Materials Brought On Site. Any hazardous materials brought into, used, stored or abandoned at the BellSouth Premises by AT&T are owned by AT&T. AT&T will indemnify BellSouth for claims, lawsuits or damages to persons or property caused by these materials. Without prior written BellSouth approval, no substantial new safety or environmental hazards can be created by AT&T or different hazardous materials used by AT&T at a BellSouth Premises. AT&T must demonstrate adequate emergency response capabilities for its materials used or remaining at the BellSouth Premises.

1.6 Spills and Releases. When contamination is discovered at a BellSouth Premises, either Party discovering the condition must notify the other Party. All Spills or Releases of regulated materials will immediately be reported by AT&T to BellSouth.

1.7 Coordinated Environmental Plans and Permits. BellSouth and AT&T will coordinate plans, permits or information required to be submitted to government agencies, such as emergency response plans, spill prevention control and countermeasures (SPCC) plans and community reporting. If fees are associated with filing, BellSouth and AT&T will develop a cost sharing procedure. If BellSouth's permit or EPA identification number must be used, AT&T must comply with all of BellSouth's permit conditions and environmental processes, including environmental "best management practices (BMP)" (see Section 2, below) and/or selection of BST disposition vendors and disposal sites.

1.8 Environmental and Safety Indemnification. BellSouth and AT&T shall indemnify, defend and hold harmless the other Party from and against any claims (including, without limitation, third-party claims for personal injury or death or real or personal property damage), judgments, damages (including direct and indirect damages and punitive damages), penalties, fines, forfeitures, costs, liabilities, interest and losses arising in connection with the violation or alleged violation of any Applicable Law or contractual obligation or the presence or alleged presence of contamination arising out of the acts or omissions of the indemnifying Party, its agents, suppliers, or employees concerning its operations at the BellSouth Premises.

2. CATEGORIES FOR CONSIDERATION OF ENVIRONMENTAL ISSUES

2.1 When performing functions that fall under the following Environmental categories on BellSouth's Premises, AT&T agrees to comply with the applicable sections of the current issue of BellSouth's Environmental and Safety Methods and Procedures (M&Ps), incorporated herein by this reference. AT&T further agrees to cooperate with BellSouth to ensure that AT&T's employees, agents, and/or suppliers are knowledgeable of and satisfy those provisions of BellSouth's Environmental M&Ps which apply to the specific Environmental function being performed by AT&T, its employees, agents and/or suppliers.

2.2 The most current version of the reference documentation must be requested from AT&T's BellSouth Regional Contract Manager (RCM) (f/k/a Account Team Collocation Coordinator – ATCC).

ENVIRONMENTAL CATEGORIES	ENVIRONMENTAL ISSUES	ADDRESSED BY THE FOLLOWING DOCUMENTATION
Disposal of hazardous material or other regulated material (e.g., batteries, fluorescent tubes, solvents & cleaning	Compliance with all applicable local, state, & federal laws and regulations	Std T&C 450 Fact Sheet Series 17000 Std T&C 660-3

materials)	Pollution liability insurance EVET approval of supplier	Approved Environmental Vendor List (Contact RCM Representative)
Emergency response	Hazmat/waste release/spill fire safety emergency	Fact Sheet Series 17000 Building Emergency Operations Plan (EOP) (specific to and located on BellSouth's Premises)
Contract labor/outsourcing for services with environmental implications to be performed on BellSouth Premises (e.g., disposition of hazardous material/waste; maintenance of storage tanks)	Compliance with all applicable local, state, & federal laws and regulations Performance of services in accordance with BST's environmental M&Ps Insurance	Std T&C 450 Std T&C 450-B (Contact RCM Representative for copy of appropriate E/S M&Ps.) Std T&C 660
Transportation of hazardous material	Compliance with all applicable local, state, & federal laws and regulations Pollution liability insurance EVET approval of supplier	Std T&C 450 Fact Sheet Series 17000 Std T&C 660-3 Approved Environmental Vendor List (Contact RCM Representative)
Maintenance/operations work which may produce a waste Other maintenance work	Compliance with all applicable local, state, & federal laws and regulations Protection of BST employees and equipment	Std T&C 450 29CFR 1910.147 (OSHA Standard) 29CFR 1910 Subpart O (OSHA Standard)
Janitorial services	All waste removal and disposal must conform to all applicable federal, state and local regulations All Hazardous Material and Waste Asbestos notification and	Procurement Manager (CRES Related Matters)-BST Supply Chain Services Fact Sheet Series 17000 GU-BTEN-001BT, Chapter 3 BSP 010-170-001BS

	protection of employees and equipment	(Hazcom)
Manhole cleaning	Compliance with all applicable local, state, & federal laws and regulations Pollution liability insurance EVET approval of supplier	Std T&C 450 Fact Sheet 14050 BSP 620-145-011PR Issue A, August 1996 Std T&C 660-3 Approved Environmental Vendor List (Contact RCM Representative)
Removing or disturbing building materials that may contain asbestos	Asbestos work practices	GU-BTEN-001BT, Chapter 3 For questions regarding removing or disturbing materials that contain asbestos, call the BellSouth Building Service Center: AL, MS, TN, KY & LA (local area code) 557-6194 FL, GA, NC & SC (local area code) 780-2740

3. DEFINITIONS

Generator. Under RCRA, the person whose act produces a Hazardous Waste, as defined in 40 CFR 261, or whose act first causes a Hazardous Waste to become subject to regulation. The Generator is legally responsible for the proper management and disposal of Hazardous Wastes in accordance with regulations.

Hazardous Chemical. As defined in the U.S. Occupational Safety and Health (OSHA) hazard communication standard (29 CFR 1910.1200), any chemical which is a health hazard or physical hazard.

Hazardous Waste. As defined in Section 1004 of RCRA.

Imminent Danger. Any conditions or practices at a BellSouth Premises which are such that a danger exists which could reasonably be expected to cause immediate death or serious harm to people or immediate significant damage to the environment or natural resources.

Spill or Release. As defined in Section 101 of CERCLA.

4. ACRONYMS

RCM – Regional Collocation Manager (f/k/a Account Team Collocation Coordinator)

BST – BellSouth Telecommunications

CRES – Corporate Real Estate and Services (formerly PS&M)

DEC/LDEC - Department Environmental Coordinator/Local Department Environmental Coordinator

E/S – Environmental/Safety

EVET - Environmental Vendor Evaluation Team

GU-BTEN-001BT - BellSouth Environmental Methods and Procedures

NESC - National Electrical Safety Codes

P&SM - Property & Services Management

Std T&C - Standard Terms & Conditions

Attachment 4

Remote Site Physical Collocation

BELLSOUTH

REMOTE SITE PHYSICAL COLLOCATION

1. Scope of Attachment

1.1 Scope of Attachment. The rates, terms, and conditions contained within this Attachment shall only apply when AT&T is occupying the collocation space as a sole occupant or as a Host within a Remote Site Location ("Remote Collocation Space") pursuant to this Attachment.

1.2 Right to occupy. BellSouth shall offer to AT&T Remote Collocation Space on rates, terms, and conditions that are just, reasonable, non-discriminatory and consistent with the rules of the Federal Communications Commission ("FCC"). If BellSouth provides collocation to other telecommunication carriers, or to a BellSouth Affiliate, BellSouth will provide the same collocation to AT&T at rates, terms and conditions no less favorable to AT&T than those provided by BellSouth to other telecommunications carriers, or to a BellSouth Affiliate. Subject to the rates, terms, and conditions of this Attachment, where space is available and collocation is technically feasible, BellSouth will allow AT&T to occupy that certain area designated by BellSouth within a BellSouth Remote Site Location, or on BellSouth property upon which the BellSouth Remote Site Location is located, of a size, which is specified by AT&T and agreed to by BellSouth. BellSouth Remote Site Locations include cabinets, huts, and controlled environmental vaults owned or leased by BellSouth that house BellSouth Network Facilities. To the extent this Attachment does not include all the necessary rates, terms and conditions for BellSouth Remote Site Locations other than cabinets, huts and controlled environmental vaults, the Parties will negotiate said rates, terms, and conditions upon request for collocation at BellSouth Remote Site Locations other than those specified above.

1.3 Space Reservation.

1.3.1 The number of racks/bays specified by AT&T may contemplate a request for space sufficient to accommodate AT&T's growth within a two-year period.

1.3.2 Neither BellSouth nor any of BellSouth's affiliates may reserve space for future use on more preferential terms than those set forth above.

1.4 Third Party Property. If the Premises, or the property on which it is located, is leased by BellSouth from a Third Party or otherwise controlled by a Third Party, special considerations and intervals may apply in addition to the terms and conditions of this Attachment. Additionally, where BellSouth notifies AT&T that BellSouth's

agreement with a Third Party does not grant BellSouth the ability to provide access and use rights to others, upon AT&T's request, BellSouth will use its best efforts to obtain the owner's consent and to otherwise secure such rights for AT&T. AT&T agrees to reimburse BellSouth for the reasonable and demonstrable costs incurred by BellSouth in obtaining such rights for AT&T. In cases where a Third Party agreement does not grant BellSouth the right to provide access and use rights to others as contemplated by this Attachment and BellSouth, despite its best efforts, is unable to secure such access and use rights for AT&T as above, AT&T shall be responsible for obtaining such permission to access and use such property. BellSouth shall cooperate with AT&T in obtaining such permission.

1.5 Space Reclamation. In the event of space exhaust within a Remote Site Location, BellSouth may include in its documentation for the Petition for Waiver filing any unutilized space in the Remote Site Location. AT&T will be responsible for any justification of unutilized space within its Remote Collocation Space, if the Commission requires such justification.

1.6 Use of Space. AT&T shall use the Remote Collocation Space for the purposes of installing, maintaining and operating AT&T's equipment (to include testing and monitoring equipment) necessary for interconnection with BellSouth services and facilities or for accessing BellSouth unbundled network elements (UNEs) for the provision of telecommunications services, as specifically set forth in this Agreement. The Remote Collocation Space may be used for no other purposes except as specifically described herein or in any amendment hereto.

1.7 Rates and charges. AT&T agrees to pay the rates and charges identified in Exhibit B attached hereto.

1.8 If any due date contained in this Attachment falls on a weekend or National holiday, then the due date will be the next business day thereafter. For intervals of ten (10) calendar days or less National holidays will be excluded.

1.9 The Parties agree to comply with all applicable federal, state, county, local and administrative laws, rules, ordinances, regulations and codes in the performance of their obligations hereunder.

2. Space Availability Report

2.1 Space Availability Report. Upon request from AT&T, BellSouth will provide a written report ("Space Availability Report"), describing in detail the space that is available for collocation and specifying the amount of Remote Collocation Space available at the Remote Site Location requested, the number of collocators present at the Remote Site Location, any modifications in the use of the space since the last report on the Remote Site Location requested and the measures BellSouth is taking to

make additional space available for collocation arrangements. A Space Availability Report does not reserve space at the Remote Site Location.

2.1.1 The request from AT&T for a Space Availability Report must be written and must include the Common Language Location Identification ("CLLI") code for both the Remote Site Location and the serving wire center. The CLLI code information for the serving wire center is located in the National Exchange Carrier Association (NECA) Tariff FCC No. 4. If AT&T is unable to obtain the CLLI code for the Remote Site Location from, for example, a site visit to the remote site, AT&T may request the CLLI code from BellSouth. To obtain a CLLI code for a Remote Site Location directly from BellSouth, AT&T should submit to BellSouth a Remote Site Interconnection Request for the serving wire center CLLI code prior to submitting its request for a Space Availability Report. AT&T should complete all the requested information and submit the Request to BellSouth. BellSouth will bill the applicable fee upon receipt of the request.

2.1.2 BellSouth will respond to a request for a Space Availability Report for a particular Remote Site Location within ten (10) calendar days of receipt of such request. BellSouth will respond in ten (10) calendar days to a request for a Space Availability Report for up to and including five (5) Remote Site Location within the same state. The response time for a request for a Space Availability Report of more than five (5) Remote Site Location shall be negotiated between the Parties. If BellSouth cannot meet the ten (10) calendar-day response time, BellSouth shall notify AT&T and inform AT&T of the time frame under which it can respond.

2.2 Remote Terminal information. Upon request, BellSouth will provide AT&T with the following information concerning BellSouth's remote terminals: (i) the address of the remote terminal; (ii) the CLLI code of the remote terminal; (iii) the carrier serving area of the remote terminal; (iv) the designation of which remote terminals subtend a particular central office; and (v) the number and address of customers that are served by a particular remote terminal.

2.2.1 BellSouth will provide this information on a first come, first served basis within thirty (30) calendar days of a AT&T request subject to the following conditions: (i) the information will only be provided on a CD in the same format in which it appears in BellSouth's systems; (ii) the information will only be provided for each serving wire center designated by AT&T, up to a maximum of thirty (30) wire centers per AT&T request per month per state, and up to for a maximum of one hundred twenty (120) wire centers total per month per state for all CLECs; and (iii) AT&T agrees to pay the costs incurred by BellSouth in providing the information.

3. Collocation Options

3.1 Cageless. BellSouth shall allow AT&T to collocate AT&T's equipment and facilities without requiring the construction of a cage or similar structure. BellSouth shall allow

AT&T to have direct access to AT&T's equipment and facilities in accordance with Section 5.8. BellSouth shall make cageless collocation available in single rack/bay increments. Except where AT&T's equipment requires special technical considerations (e.g., special cable racking or isolated ground plane), BellSouth shall assign cageless Remote Collocation Space in conventional equipment rack lineups where feasible. For equipment requiring special technical considerations, AT&T must provide the equipment layout, including spatial dimensions for such equipment pursuant to generic requirements contained in Telcordia GR-63-Core, and shall be responsible for compliance with all special technical requirements associated with such equipment pursuant to Section 7.6 following.

3.2 Caged. At AT&T's expense, AT&T may arrange with a Supplier certified by BellSouth ("BellSouth Certified Supplier") to construct a collocation arrangement enclosure, where technically feasible as that term has been defined by the FCC, in accordance with BellSouth's Technical References (TR) ("Specifications") prior to starting equipment installation. BellSouth will provide Specifications upon request. AT&T's BellSouth Certified Supplier shall be responsible for filing and receiving any and all necessary permits and/or licenses for such construction. BellSouth shall cooperate with AT&T and provide, at AT&T's expense, the documentation, including existing building architectural drawings, enclosure drawings, and Specifications required and necessary for AT&T's BellSouth Certified Supplier to obtain the zoning, permits and/or other licenses. AT&T's BellSouth Certified Supplier shall bill AT&T directly for all work performed for AT&T pursuant to this Attachment and BellSouth shall have no liability for nor responsibility to pay such charges imposed by AT&T's BellSouth Certified Supplier. AT&T must provide the local BellSouth Remote Site Location contact with two Access Keys used to enter the locked enclosure. Access Keys provided to BellSouth shall not be duplicated under any circumstances. Except in the case of an emergency, BellSouth will not access AT&T's locked enclosure prior to notifying AT&T at least forty-eight (48) hours or two (2) business days, whichever is greater, before access to the Remote Site Location is required. BellSouth shall notify AT&T in writing immediately in the case of lost or stolen Access Keys. BellSouth will reimburse AT&T the reasonable costs to replace each Access Key lost or stolen. Should it become necessary for AT&T to re-key locked enclosures as a result of a lost Access Key(s) or for failure to return an Access Key(s), BellSouth shall pay for all reasonable costs associated with the re-keying. AT&T shall have the right, at its expense, to have locks changed where deemed necessary for the protection and security of its locked enclosures, provided that AT&T shall immediately provide BellSouth with such new keys. Upon request, BellSouth shall construct the enclosure for AT&T.

3.2.1 BellSouth may elect to review AT&T's plans and specifications prior to allowing construction to start to ensure compliance with BellSouth's Specifications. Notification to AT&T indicating BellSouth's desire to execute this review will be provided in BellSouth's response to the Application, if AT&T has indicated their desire to construct their own enclosure. If AT&T's Application does not indicate its

desire to construct its own enclosure, and AT&T subsequently decides to construct its own enclosure prior to the BellSouth Application Response, as defined in Section 6.9 of this Attachment, then AT&T will submit an application modification, indicating its desire to construct its own enclosure, and no additional application fees will be assessed by BellSouth. If AT&T subsequently decides to construct its own enclosure after the firm order (hereinafter "Firm Order"), AT&T will submit an Application, as defined in Section 6.2 of this Attachment. If BellSouth elects to review AT&T's plans and specifications, then BellSouth will provide notification within ten (10) calendar days after the Subsequent Application firm order date. BellSouth shall complete its review within fifteen (15) calendar days after the receipt of AT&T's plans and specifications. BellSouth shall complete its review within fifteen (15) calendar days after the receipt of the plans and specifications. Regardless of whether or not BellSouth elects to review AT&T's plans and specifications, BellSouth reserves the right to inspect the enclosure after construction to make sure it is constructed according to the submitted plans and specifications and/or BellSouth's Specifications, as applicable. BellSouth shall require AT&T to remove or correct within seven (7) calendar days at AT&T's expense any structure that does not meet these plans and specifications or, where applicable, BellSouth's Specifications.

3.3 Shared Collocation. AT&T may allow other telecommunications carriers to share AT&T's Remote Collocation Space pursuant to terms and conditions agreed to by AT&T ("Host") and other telecommunications carriers ("Guests") and pursuant to this Section, except where the BellSouth Remote Site Location is located within a leased space and BellSouth is prohibited by said lease from offering such an option or is located on property for which BellSouth holds an easement and such easement does not permit such an option. AT&T shall notify BellSouth in writing upon execution of any agreement between the Host and its Guest within ten (10) calendar days of its execution and prior to any Firm Order. Further, such notice shall include the name of the Guest(s) and the term of the agreement, and shall contain a certification by AT&T that said agreement imposes upon the Guest(s) the same terms and conditions for Remote Collocation Space as set forth in this Attachment between BellSouth and AT&T.

3.3.1 AT&T, as the Host, shall be the sole interface and responsible Party to BellSouth for assessment of rates and charges contained within this Attachment and for the purposes of ensuring that the safety and security requirements of this Attachment are fully complied with by the Guest, its employees and agents. BellSouth shall provide AT&T with a proration of the costs of the Remote Collocation Space based on the number of collocators and the space used by each with a minimum charge of one (1) bay/rack per Host/Guest. In those instances where the Host permits a Guest to use a shelf within the Host's bay, BellSouth will not prorate the cost of the bay. In all states other than Florida, and in addition to the foregoing, AT&T shall be the responsible party to BellSouth for the purpose of submitting applications for bay/rack placement for the Guest.. A separate Guest application shall require the assessment of an Application Fee, as set forth in Exhibit B, which will be charged to the Host. BellSouth shall bill

this nonrecurring fee on the date that BellSouth provides it written response ("Application Response").

3.3.2 Notwithstanding the foregoing, the Guest may arrange directly with BellSouth for the provision of the interconnecting facilities between BellSouth and the Guest and for the provision of the services and access to unbundled network elements. The bill for these interconnecting facilities, services and access to UNEs will be charged to the Guest pursuant to the applicable tariff or the Guest's Interconnection Agreement with BellSouth.

3.3.3 AT&T shall indemnify and hold harmless BellSouth from any and all claims, actions, causes of action, of whatever kind or nature arising out of the presence of AT&T's Guest(s) in the Remote Collocation Space except to the extent caused by BellSouth's sole negligence, gross negligence, or willful misconduct.

3.4 Adjacent Collocation. Subject to technical feasibility and space availability, BellSouth will permit adjacent Remote Site collocation arrangements ("Remote Site Adjacent Arrangement") on the property on which the Remote Site is located when space within the Remote Site Location is legitimately exhausted, and subject only to reasonable safety and maintenance requirements. The Remote Site Adjacent Arrangement shall be constructed or procured by AT&T and in conformance with BellSouth's design and construction Specifications. Further, AT&T shall construct, procure, maintain and operate said Remote Site Adjacent Arrangement(s) pursuant to all of the terms and conditions set forth in this Attachment. Rates shall be negotiated at the time of the application for the Remote Site Adjacent Arrangement.

3.4.1 Should AT&T elect Adjacent Collocation, AT&T must arrange with a BellSouth Certified Supplier to construct a Remote Site Adjacent Arrangement structure in accordance with BellSouth's Specifications. Where local building codes require enclosure specifications more stringent than BellSouth's Specifications, AT&T and AT&T's BellSouth Certified Supplier must comply with local building code requirements. AT&T's BellSouth Certified Supplier shall be responsible for filing and receiving any and all necessary zoning, permits and/or licenses for such construction. AT&T's BellSouth Certified Supplier shall bill AT&T directly for all work performed for AT&T pursuant to this Attachment and BellSouth shall have no liability for nor responsibility to pay such charges imposed by AT&T's BellSouth Certified Supplier. AT&T must provide the local BellSouth Remote Site Location contact with two cards, keys or other access device used to enter the locked enclosure. Access Keys provided to BellSouth shall not be duplicated under any circumstances. BellSouth shall notify AT&T in writing immediately in the case of lost or stolen Access Keys. BellSouth will reimburse AT&T the reasonable costs to replace each Access Key lost or stolen. Should it become necessary for AT&T to re-key locked enclosures as a result of a lost Access Key(s) or for failure to return an Access Key(s), BellSouth shall pay for all reasonable costs associated with the re-keying. AT&T shall have the right, at its expense, to have locks changed where deemed necessary for the protection and security of its locked enclosures, provided that AT&T shall immediately provide

BellSouth with such new keys. Except in the case of an emergency, BellSouth will not access AT&T's locked enclosure prior to notifying AT&T at least forty-eight (48) hours or two (2) business days, whichever is greater, before access to the Remote Site Location is required.

3.4.2 AT&T must submit its plans and specifications to BellSouth with its Firm Order. BellSouth shall review AT&T's plans and specifications prior to construction of a Remote Site Adjacent Arrangement(s) to ensure compliance with BellSouth's Specifications. BellSouth shall complete its review within fifteen (15) calendar days after receipt of plans and specifications. BellSouth may inspect the Remote Site Adjacent Arrangement(s) during and after construction to confirm it is constructed according to the submitted plans and specifications. BellSouth shall require AT&T to remove or correct within seven (7) calendar days at AT&T's expense any structure that does not meet these plans and specifications or, where applicable, BellSouth's Specifications.

3.4.3 AT&T shall provide a concrete pad, the structure housing the arrangement, heating/ventilation/air conditioning ("HVAC"), lighting, and all facilities that connect the structure (i.e. racking, conduits, etc.) to the BellSouth point of demarcation. At AT&T's option, and where the local authority having jurisdiction permits, BellSouth shall provide an AC power source and access to physical collocation services and facilities subject to the same nondiscriminatory requirements as applicable to any other physical collocation arrangement. Where AT&T has elected to construct the adjacent enclosure itself, BellSouth shall deliver to AT&T the requested ground space thirty (30) days after BellSouth receives AT&T's Bona Fide Firm Order, unless BellSouth requests an extension of that time, which AT&T will not unreasonably withhold. BellSouth will provide DC power in an adjacent enclosure provided that such provisioning can be done in compliance with all applicable national electrical and safety code or any local codes, such as but not limited to zoning codes, provided that BellSouth and AT&T can agree upon a reasonable price for the provision of this service, and provided that BellSouth and AT&T can negotiate a reasonable provisioning interval. AT&T's BellSouth Certified Supplier shall be responsible, at AT&T's expense, for filing and receiving any and all necessary zoning, permits and/or licenses for such arrangement. BellSouth shall allow Shared Collocation within a Remote Site Adjacent Arrangement pursuant to the terms and conditions set forth herein.

4. **Occupancy**

4.1 Occupancy. BellSouth will notify AT&T in writing when the Remote Collocation Space is ready for occupancy (Space Ready Date). AT&T will schedule and complete an acceptance walkthrough of the Remote Collocation Space with BellSouth within fifteen (15) calendar days of the Space Ready Date. BellSouth will correct any deviations in AT&T's original or jointly amended application requirements within

seven (7) calendar days after the walkthrough, unless the Parties mutually agree upon a different time frame. The new Space Ready Date will be calculated by adding no more than seven (7) calendar days from the date that any deviations are agreed to by the Parties as a result of the walkthrough, if a walkthrough has been conducted. The correction of these deviations from AT&T's original request shall be at BellSouth's expense. Within fifteen (15) days of the new Space Ready Date, or as otherwise mutually agreed to by the Parties, another acceptance walkthrough will be conducted. This follow-up acceptance walkthrough will be limited to only those items identified in the initial walkthrough. At the end of the acceptance walkthrough or after all deviations are corrected, AT&T will execute a written document accepting the Remote Collocation Space, and billing will begin from that date. In the event AT&T fails to complete an acceptance walkthrough within this fifteen (15) calendar day interval, the Remote Collocation Space shall be deemed accepted by AT&T on the most recent Space Ready Date and billing will commence from that date. If AT&T decides to occupy the space prior to the Space Ready Date, the date AT&T occupies the space is deemed the new Space Acceptance Date and billing will begin from that date. AT&T must notify BellSouth in writing that its collocation equipment installation is complete and operational with BellSouth's network. BellSouth may, at its discretion, refuse to accept any orders for cross-connects until it has received such notice. For the purposes of this paragraph, AT&T's telecommunications equipment will be deemed operational when it has been cross-connected to BellSouth's network for the purpose of provisioning telecommunication services to its customers.

4.2 Termination of Occupancy. In addition to any other provisions addressing termination of occupancy in this Attachment, AT&T may terminate occupancy in a particular Remote Collocation Space, in whole or in part, by submitting an Application requesting termination of occupancy; such termination shall be effective upon BellSouth's acceptance of the Space Relinquishment Form. Billing for monthly recurring charges will cease on the date AT&T and BellSouth conduct an inspection of the terminated space and jointly sign off on the Space Relinquishment Form or on the date that AT&T signs off on the Space Relinquishment Form and sends the form to BellSouth if a subsequent inspection of the terminated space by BellSouth reveals no discrepancies. If the subsequent inspection by BellSouth reveals discrepancies, billing will cease on the date that BellSouth and AT&T jointly conduct an inspection which confirms that AT&T has corrected the discrepancies. An Application Fee will not apply for termination of occupancy. BellSouth may terminate AT&T's right to occupy the Remote Collocation Space in the event AT&T fails to comply with any provision of this Agreement. BellSouth may terminate AT&T's right to occupy Remote Collocation Space in the event AT&T fails to comply with any material provision directly related to Collocation in this Agreement provided BellSouth gives AT&T thirty (30) calendar days' prior written notice of the failure to comply and gives AT&T an opportunity to cure during such period. Notwithstanding the above, any termination for non-payment of applicable fees, shall be in accordance with Section 1.17.2 of Attachment 7, Billing.

4.2.1 Upon termination of occupancy, AT&T at its expense shall remove its equipment and other property from the Remote Collocation Space. AT&T shall have thirty (30) calendar days from the Bona Fide Firm Order ("BFFO") Application Date ("Termination Date") to complete such removal, including the removal of all equipment and facilities of AT&T's Guest(s), unless AT&T's Guest(s) has assumed responsibility for the Remote Collocation Space housing the Guest(s)'s equipment and executed the documentation required by BellSouth prior to such removal date. AT&T shall continue payment of monthly fees to BellSouth until such date as AT&T, and if applicable AT&T's Guest(s), has fully vacated the Remote Collocation Space and the Space Relinquish Form has been accepted by BellSouth. Should AT&T or AT&T's Guest(s) fail to vacate the Remote Collocation Space within thirty (30) calendar days from the Termination Date, BellSouth shall have the right to remove the equipment and dispose of the equipment and other property of AT&T or AT&T's Guest(s), in any manner that BellSouth deems fit, at AT&T's expense and with no liability whatsoever for AT&T's or AT&T's Guest(s)'s property. Upon termination of AT&T's right to occupy Remote Collocation Space, the Remote Collocation Space will revert back to BellSouth, and AT&T shall surrender such Remote Collocation Space to BellSouth in the same condition as when first occupied by the AT&T except for ordinary wear and tear unless otherwise agreed to by the Parties. For CEVs and huts AT&T's BellSouth Certified Supplier shall be responsible for updating and making any necessary changes to BellSouth's records as required by BellSouth's Specifications including but not limited to Record Drawings and ERMA Records. AT&T shall be responsible for the cost of removing any AT&T constructed enclosure, together with all support structures (e.g., racking, conduits, or power cables), at the termination of occupancy and restoring the grounds to their original condition.

5. Use of Remote Collocation Space

5.1 Equipment Type. BellSouth shall permit the collocation and use of any equipment necessary for interconnection to BellSouth's network or access to BellSouth's unbundled network elements in the provision of telecommunications services, as the term "necessary" is defined by FCC 47 C.F.R. Section 51.323 (b). Equipment is necessary for interconnection if an inability to deploy that equipment would, as a practical, economic, or operational matter, preclude the requesting carrier from obtaining interconnection with BellSouth at a level equal in quality to that which BellSouth obtains within its own network or what BellSouth provides to any Affiliate, subsidiary, or other party.

5.2 Equipment is necessary for access to an unbundled network element if an inability to deploy that equipment would, as a practical, economic, or operational matter, preclude the requesting carrier from obtaining nondiscriminatory access to that unbundled network element, including any of its features, functions, or capabilities.

5.3 Multi-functional equipment shall be deemed necessary for interconnection or access to an unbundled network element if and only if the primary purpose and function of the

equipment, as the requesting carrier seeks to deploy it, meets either or both of the standards set forth above in Sections 5.1 and 5.2. For a piece of equipment to be utilized primarily to obtain equal in quality interconnection or nondiscriminatory access to one or more unbundled network elements, there also must be a logical nexus between the additional functions the equipment would perform and the telecommunications services the requesting carrier seeks to provide to its customers by means of the interconnection or unbundled network element. The collocation of those functions of the equipment that, as stand-alone functions, do not meet either of the standards set forth above in Sections 5.1 and 5.2 must not cause the equipment to significantly increase the burden on BellSouth's property. Such equipment necessary for interconnection or access to unbundled network elements shall include, but is not limited to transmission equipment, equipment to light dark fiber, optical terminating equipment and multiplexers, digital subscriber line access multiplexers, routers, asynchronous transfer mode multiplexers, multifunction equipment, remote switching modules, fiber distribution frames, splitters, concentrators, cross connect systems, switching equipment other than traditional circuit switches and ancillary equipment that enables a requesting carrier to assure proper provisioning and functioning of other collocated equipment.

5.3.1 Examples of equipment that would not be considered necessary include, but are not limited to: traditional circuit switching equipment, equipment used exclusively for call-related databases, computer servers used exclusively for providing information services, operations support system (OSS) equipment used to support collocated telecommunications carrier network operations, equipment that generates customer orders, manages trouble tickets or inventory, or stores customer records in centralized databases, etc. BellSouth will determine upon receipt of an application if the requested equipment is necessary based on the criteria established by the FCC. Multifunctional equipment placed on the BellSouth Premises must not place any greater relative burden on BellSouth's property than comparable single function equipment.

5.4 Whenever BellSouth objects to collocation of equipment by AT&T for purposes within the scope of section 25 1 (c) (6) of the Act, BellSouth shall prove to the state commission that the equipment is not necessary for interconnection or access to unbundled network elements under the standards set forth above in this Section. BellSouth may not object to the collocation of equipment on the grounds that the equipment does not comply with safety or engineering standards that are more stringent than the safety or engineering standards that BellSouth applies to its own equipment. BellSouth may not object to the collocation of equipment on the ground that the equipment fails to comply with Network Equipment and Building Specifications performance standards or any other performance standards. If BellSouth denies collocation of AT&T's equipment, citing safety standards, BellSouth must provide to AT&T within five (5) business days of the denial a list of all equipment that BellSouth locates at the premises in question, together with an affidavit attesting that all of that equipment meets or exceeds the safety standard that Bellsouth

contends AT&T's equipment fails to meet. This affidavit must set forth in detail: the exact safety requirement that AT&T's equipment does not satisfy; BellSouth's basis for concluding that AT&T's equipment does not meet this safety requirement; and BellSouth's basis for concluding why collocation of equipment not meeting this safety requirement would compromise network safety.

5.5 All AT&T equipment installation shall comply with BellSouth TR 73503-11h, "Grounding - Engineering Procedures". Metallic cable sheaths and metallic strength members of optical fiber cables as well as the metallic cable sheaths of all copper conductor cables shall be bonded to the designated grounding bus for the Remote Site Location. All copper conductor pairs, working and non-working, shall be equipped with a solid-state protector unit (over-voltage protection only), which has been listed by a nationally recognized testing laboratory.

5.6 Commencing with the most current calendar quarter after the effective date of this Attachment, and thereafter with respect to each subsequent calendar quarter during the term of this Attachment, AT&T will, no later than thirty (30) days after the close of such calendar quarter, provide a report to ICS Collocation Product Management, Room 34A55, 675 W. Peachtree Street, Atlanta, Georgia 30375 listing any equipment in the Remote Collocation Space that was added during the calendar quarter for which there is a UCC-1 lien holder or another entity that has a secured financial interest in such equipment. This shall be defined as "Secured Equipment". If no Secured Equipment has been installed within a given calendar quarter, no report shall be due hereunder in connection with such calendar quarter.

5.7 AT&T shall not use the Remote Collocation Space for marketing purposes nor shall it place any identifying signs or markings in the area surrounding the Remote Collocation Space or on the grounds of the Remote Site Location.

5.8 AT&T shall place a plaque or other identification affixed to AT&T's equipment to identify AT&T's equipment, including a list of emergency contacts with telephone numbers.

5.9 Entrance Facilities. AT&T may elect to place AT&T-owned or AT&T-leased fiber entrance facilities into the Remote Collocation Space. BellSouth will designate the point of interconnection at the Remote Site Location housing the Remote Collocation Space, which is physically accessible by both Parties. AT&T will provide and place copper cable through conduit from the Remote Collocation Space to the Feeder Distribution Interface to the splice location of sufficient length for splicing by BellSouth. AT&T must contact BellSouth for instructions prior to placing the entrance facility cable. AT&T is responsible for maintenance of the entrance facilities.

5.9.1 Shared Use. AT&T may utilize spare capacity on an existing interconnector entrance facility for the purpose of providing an entrance facility to AT&T's collocation arrangement within the same BellSouth Remote Site Location. BellSouth shall allow

splicing to the entrance facility, provided that the fiber is non-working fiber. AT&T must arrange with BellSouth in accordance with BellSouth's Special Construction Procedures, RL93-11-030BT, and provide a LOA from the other telecommunications carrier for BellSouth to splice the AT&T provided riser cable to the spare capacity on the entrance facility. If AT&T desires to allow another telecommunications carrier to use its entrance facilities, then that telecommunications carrier must arrange with BellSouth in accordance with BellSouth's Special Construction Procedures, RL93-11-030BT, and provide a LOA from AT&T for BellSouth to splice that telecommunications carrier's provided riser cable to the spare capacity on AT&T's entrance facility.

5.10 Demarcation Point. BellSouth will designate the point(s) of demarcation between AT&T's equipment and/or network and BellSouth's network located as close as reasonably possible to AT&T's Remote Site Collocation Space. Each Party will be responsible for maintenance and operation of all equipment/facilities on its side of the demarcation point. AT&T or its agent must perform all required maintenance to AT&T equipment/facilities on its side of the demarcation point, pursuant to Section 5.6, following.

5.11 AT&T's Equipment and Facilities. AT&T, or if required by this Attachment, AT&T's BellSouth Certified Supplier, is solely responsible for the design, engineering, installation, testing, provisioning, performance, monitoring, maintenance and repair of the equipment and facilities used by AT&T which must be performed in compliance with all applicable BellSouth Specifications. Such equipment and facilities may include but are not limited to cable(s), equipment, and point of termination connections. AT&T and its selected BellSouth Certified Supplier must follow and comply with all BellSouth requirements outlined in BellSouth's TR 73503, TR 73519, TR 73572, and TR 73564.

5.12 BellSouth's Access to Remote Collocation Space. From time to time BellSouth may require access to the Remote Collocation Space. BellSouth retains the right to access the Remote Collocation Space for the purpose of making BellSouth equipment and Remote Site Location modifications. Except in case of emergency, BellSouth will give notice to AT&T at least forty-eight (48) hours before access to the Remote Collocation Space is required. AT&T may elect to be present whenever BellSouth performs work in the Collocation Space. The Parties agree that AT&T will not bear any of the expense associated with this work.

5.13 Access. Pursuant to Section 12, AT&T shall have access to the Remote Collocation Space twenty-four (24) hours a day, seven (7) days a week. AT&T agrees to provide the name and social security number or date of birth or driver's license number of each employee, supplier, or agents of AT&T or AT&T's Guests to be provided with access keys or cards ("Access Keys") prior to the issuance of said Access Keys using form RF-2906-C "CLEC and CLEC Certified Supplier Access Request and Acknowledgement". Key acknowledgement forms, "Collocation Acknowledgement

Sheet" for access cards and "Key Acknowledgement Form" for keys, must be signed by AT&T and returned to BellSouth Access Management within fifteen (15) calendar days of AT&T's receipt. Failure to return properly acknowledged forms will result in the holding of subsequent requests until acknowledgements are current. Access Keys shall not be duplicated under any circumstances. AT&T agrees to be responsible for all Access Keys and for the return of all said Access Keys in the possession of AT&T's employees, suppliers, Guests, or agents after termination of the employment relationship, contractual obligation with AT&T or upon the termination of this Attachment or the termination of occupancy of an individual Remote Collocation Space arrangement.

5.13.1 BellSouth will permit one accompanied site visit to AT&T's designated collocation arrangement location after receipt of the BFFO without charge to AT&T. AT&T must submit to BellSouth the completed Access Control Request Form for all employees or agents requiring access to the BellSouth Remote Site Location a minimum of thirty (30) calendar days prior to the date AT&T desires access to the Remote Collocation Space. In order to permit reasonable access during construction of the Remote Collocation Space, AT&T may submit such a request at any time subsequent to BellSouth's receipt of the BFFO. In the event AT&T desires access to the Remote Collocation Space after submitting such a request but prior to access being approved, in addition to the first accompanied free visit, BellSouth shall permit AT&T to access the Remote Collocation Space accompanied by a security escort at AT&T's expense. AT&T must request escorted access at least three (3) business days prior to the date such access is desired.

5.14 Lost or Stolen Access Keys. AT&T shall notify BellSouth in writing immediately in the case of lost or stolen Access Keys. AT&T will reimburse BellSouth to replace lost or stolen Access Keys at the rates as set forth in Exhibit B of this Attachment. Should it become necessary for BellSouth to re-key Remote Site Locations as a result of a lost Access Key(s) or for failure to return an Access Key(s), AT&T shall pay for all reasonable costs associated with the re-keying. AT&T must submit to BellSouth the completed Access Control Request Form (RF-2906-C) for all employees or agents requiring access to the BellSouth Premises a minimum of thirty (30) calendar days prior to the date AT&T desires access to the Remote Collocation Space. Space.

5.15 Interference or Impairment. Notwithstanding any other provisions of this Attachment, AT&T shall not use any product or service provided under this Agreement, any other service related thereto or used in combination therewith, or place or use any equipment and facilities in any manner that 1) significantly degrades, interferes with or impairs service provided by BellSouth or by any other entity or any person's use of its telecommunications service; 2) endangers or damages the equipment, facilities or other property of BellSouth or of any other entity or person; 3) compromises the privacy of any communications; or 4)creates an unreasonable risk of injury or death to any individual or to the public. If BellSouth reasonably determines that any equipment or facilities of AT&T violates the provisions of this paragraph, BellSouth shall give

written notice to AT&T, which notice shall direct AT&T to cure the violation within forty-eight (48) hours of AT&T's actual receipt of written notice or, at a minimum, to commence curative measures within 24 hours and to exercise reasonable diligence to complete such measures as soon as possible thereafter. After receipt of the notice, the Parties agree to consult immediately and, if necessary, to inspect the arrangement.

5.15.1 Except in the case of the deployment of an advanced service which significantly degrades the performance of other advanced services or traditional voice band services, if AT&T fails to take curative action within forty-eight (48) hours or if the violation is of a character which poses an immediate and substantial threat of damage to property, injury or death to any person, or any other significant degradation, interference or impairment of BellSouth's or any other entity's service, then and only in that event BellSouth may take such action as it deems appropriate to correct the violation, including without limitation the interruption of electrical power to AT&T's equipment. BellSouth will endeavor, but is not required, to provide notice to AT&T prior to taking such action and shall have no liability to AT&T for any damages arising from such action, except to the extent that such action by BellSouth constitutes willful misconduct.

5.16 For purposes of this section, the term significantly degrade shall mean an action that noticeably impairs a service from a user's perspective. In the case of the deployment of an advanced service which significantly degrades the performance of other advanced services or traditional voice band services and AT&T fails to take curative action within forty-eight (48) hours then BellSouth will establish before the Commission that the technology deployment is causing the significant degradation. Any claims of network harm presented to AT&T or, if subsequently necessary, the Commission must be supported with specific and verifiable information. Where BellSouth demonstrates that a deployed technology is significantly degrading the performance of other advanced services or traditional voice band services, AT&T shall discontinue deployment of that technology and migrate its customers to technologies that will not significantly degrade the performance of other such services. Where the only degraded service itself is a known disturber, and the newly deployed technology satisfies at least one of the criteria for a presumption that is acceptable for deployment under Section 47 C.F.R. 51.230, the degraded service shall not prevail against the newly-deployed technology.

5.17 Personalty and its Removal. Facilities and equipment placed by AT&T in the Remote Collocation Space shall not become a part of the Remote Site Location, even if nailed, screwed or otherwise fastened to the Remote Collocation Space but shall retain their status as personalty and may be removed by AT&T at any time. Any damage caused to the Remote Collocation Space by AT&T's employees, agents or representatives shall be promptly repaired by AT&T at its expense.

5.18 Alterations. In no case shall AT&T or any person acting on behalf of AT&T make any rearrangement, modification, improvement, addition, or other alteration which could

affect in any way space, power, HVAC, and/or safety considerations to the Remote Collocation Space or the BellSouth Remote Site Location without the written consent of BellSouth, which consent shall not be unreasonably withheld. The cost of any specialized alterations shall be paid by AT&T. Any such material rearrangement, modification, improvement, addition, or other alteration shall require an application and Application Fee. BellSouth will bill the nonrecurring fee on the date that BellSouth provides an Application Response.

5.19 Upkeep of Remote Collocation Space. AT&T shall be responsible for the general upkeep and cleaning of the Remote Collocation Space. AT&T shall be responsible for removing any AT&T debris from the Remote Collocation Space and from in and around the Remote Site Location on each visit.

6. Ordering and Preparation of Remote Collocation Space

6.1 Should any state or federal regulatory agency impose procedures or intervals applicable to AT&T and BellSouth that are different from procedures or intervals set forth in this Section, whether now in effect or that become effective after execution of this Agreement, those procedures or intervals shall supersede the requirements set forth herein for that jurisdiction for all applications submitted for the first time after the effective date thereof

6.2 Remote Site Application. When AT&T or AT&T's Guest(s) desires to install a bay/rack in a Remote Site Location, AT&T shall submit to BellSouth a Physical Expanded Interconnection Application Document ("Application"). The application is Bona Fide when it is complete and accurate, meaning that all required fields on the application are completed with the appropriate type of information. An application fee will apply which will be billed on the date that BellSouth provides an Application Response. The placement of an additional bay/rack at a later date will be treated in the same fashion and an application will be required. The installation of additional shelves/equipment, subject to the restrictions contained in Section 5.10, within an existing bay/rack does not require an application.

6.3 Availability of Space. Upon submission of an application, BellSouth will permit AT&T to physically collocate, pursuant to the terms of this Attachment, at any BellSouth Remote Site Location, unless BellSouth has determined that there is no space available due to space limitations or that collocation at the Remote Site Location is not practical for technical reasons. In the event space is not immediately available at a Remote Site Location, BellSouth reserves the right to make additional space available, in which case the conditions in Section 7 shall apply, or BellSouth may elect to deny space in accordance with this Section in which case virtual or adjacent collocation options may be available. If the amount of space requested is not available, BellSouth will notify AT&T of the amount that is available.

6.4 Space Availability Notification.

6.4.1 Unless otherwise specified, BellSouth will respond to an application within ten (10) calendar days as to whether space is available or not available within a BellSouth Remote Site Location. BellSouth will also respond as to whether the application is Bona Fide and if it is not Bona Fide the items necessary to cause the application to become Bona Fide. If the amount of space requested is not available, BellSouth will notify AT&T of the amount of space that is available and no Application Fee shall apply. When BellSouth's response includes an amount of space less than that requested by AT&T or differently configured no application fee shall apply. If AT&T decides to accept the available space, AT&T must resubmit its application to reflect the actual space available prior to submitting a BFFO and an application fee will be billed.

6.5 Denial of Application. If BellSouth notifies AT&T that no space is available (Denial of Application), BellSouth will not assess an application fee to AT&T. After notifying AT&T that there is no available space in the requested Remote Site Location, BellSouth will allow AT&T, upon request, to tour the entire Remote Site Location within ten (10) calendar days of such Denial of Application. In order to schedule this tour within ten (10) calendar days, BellSouth must receive the request for a tour of the Remote Site Location within five (5) calendar days of the Denial of the Application. Notwithstanding the foregoing, the Parties may agree to conduct a tour within thirty (30) calendar days of the Denial of Application.

6.6 Filing of Petition for Waiver. Upon Denial of Application BellSouth will timely file a petition with the Commission pursuant to 47 U.S.C. § 251(c)(6). BellSouth shall provide to the Commission any information requested by that Commission. Such information shall include which space, if any, BellSouth or any of BellSouth's affiliates have reserved for future use and a detailed description of the specific future uses for which the space has been reserved. Subject to an appropriate nondisclosure agreement or provision, BellSouth shall permit AT&T to inspect any plans or diagrams that BellSouth provides to the Commission.

6.7 Waiting List. On a first-come, first-served basis governed by the date of receipt of an application or Letter of Intent, BellSouth will maintain a waiting list of requesting carriers who have either received a Denial of Application or, where it is publicly known that the Remote Site Location is out of space, have submitted a Letter of Intent to collocate. BellSouth will notify the telecommunications carriers on the waiting list that can be accommodated by the amount of space that becomes available according to the position of the telecommunications carriers on said waiting list.

6.7.1 When space becomes available, AT&T must submit an updated, complete, and correct application to BellSouth within thirty (30) calendar days of such notification. If AT&T has originally requested caged Remote Collocation Space and cageless Remote Collocation Space becomes available, AT&T may refuse such space and notify BellSouth in writing within that time that AT&T wants to maintain its place on the waiting list without accepting such space. AT&T may accept an amount of space less

than its original request by submitting an application as set forth above, and upon request, may maintain its position on the waiting list for the remaining space that was initially requested. If AT&T does not submit such an application or notify BellSouth in writing as described above, BellSouth will offer such space to the next telecommunications carrier on the waiting list and remove AT&T from the waiting list. Upon request, BellSouth will advise AT&T as to its position on the list.

6.8 Application Response.

6.8.1 When space has been determined to be available, BellSouth will provide an Application Response within twenty (20) calendar days of receipt of a Bona Fide application. The Application Response will include, at a minimum, the configuration of the space, the Cable Installation Fee, Cable Records Fee, and the space preparation fees, as described in Section 8.

6.9 Application Modifications.

6.9.1 If a modification or revision is made to any information in the Bona Fide application prior to a BFFO, with the exception of modifications to (1) Customer Information, (2) Contact Information or (3) Billing Contact Information, , said application shall be considered a new application and shall be handled as a new application with respect to response and provisioning intervals and BellSouth will charge AT&T a full application fee as set forth in Exhibit B. BellSouth will bill the nonrecurring fee on the date that BellSouth provides an Application Response.

6.10 Bona Fide Firm Order.

6.10.1 AT&T shall indicate its intent to proceed with equipment installation in a BellSouth Remote Site Location by submitting a Firm Order to BellSouth. The BFFO must be received by BellSouth no later than thirty (30) calendar days after BellSouth's Application Response to AT&T's Bona Fide application or the application will expire.

6.10.2 The firm order date will be the date BellSouth is in receipt of AT&T's BFFO. BellSouth will acknowledge the receipt of AT&T's BFFO within seven (7) calendar days of receipt indicating that the BFFO has been received. A BellSouth response to a BFFO will include a Firm Order Confirmation containing the firm order date. No revisions will be made to a BFFO.

7. Construction and Provisioning

7.1 Construction and Provisioning Intervals.

7.1.1 BellSouth will complete construction for collocation arrangements under ordinary conditions as soon as possible and within a maximum of sixty (60) calendar days from receipt of a BFFO and ninety (90) calendar days from receipt of a BFFO for extraordinary conditions or as agreed to by the Parties. Ordinary conditions are

defined as space available with only minor changes to support systems required, such as but not limited to, HVAC, cabling and the power plant(s). Extraordinary conditions shall include, but not limited to, major BellSouth equipment rearrangement or addition; power plant addition or upgrade; major mechanical addition or upgrade; major upgrade for ADA compliance; environmental hazard or hazardous materials abatement; and arrangements for which equipment shipping intervals are extraordinary in length. The Parties may mutually agree to renegotiate an alternative provisioning interval or BellSouth may seek a waiver from this interval from the Commission.

7.2 In the event BellSouth does not have space immediately available at a Remote Site Location, BellSouth may elect to make additional space available by, for example but not limited to, rearranging BellSouth facilities or constructing additional capacity. In such cases, the above intervals shall not apply and BellSouth will provision the Remote Collocation Space in a nondiscriminatory manner and at parity with BellSouth and will provide AT&T with the estimated completion date in its Response.

7.3 Joint Planning. Joint planning between BellSouth and AT&T will commence within a maximum of twenty (20) calendar days from BellSouth's receipt of a BFFO. BellSouth will provide the preliminary design of the Remote Collocation Space and the equipment configuration requirements as reflected in the Bona Fide application and affirmed in the BFFO. The Remote Collocation Space completion time period will be provided to AT&T during joint planning. The Remote Site Collocation Space completion interval as already provided for in Section 7.1. will not change.

7.4 Permits. Each Party or its agents will diligently pursue filing for the permits required for the scope of work to be performed by that Party or its agents within ten (10) calendar days of the completion of finalized construction designs and specifications.

7.5 Acceptance Walkthrough. AT&T will schedule and complete an acceptance walkthrough of each Remote Collocation Space with BellSouth within fifteen (15) calendar days of BellSouth’s notifying AT&T that the Remote Collocation Space is ready for occupancy. In the event that AT&T fails to complete an acceptance walkthrough within this fifteen (15) calendar day interval, the Remote Collocation Space shall be deemed accepted by AT&T on the Space Ready Date. BellSouth will correct any deviations to AT&T’s original or jointly amended requirements within seven (7) calendar days after the walkthrough, unless the Parties jointly agree upon a different time frame.

7.6 Use of BellSouth Certified Supplier. AT&T shall select a supplier which has been approved by BellSouth to perform all engineering and installation work AT&T and AT&T’s BellSouth Certified Supplier must follow and comply with all BellSouth requirements outlined in BellSouth’s TR 73503, TR 73519, TR 73572, and TR 73564. In some cases, AT&T must select separate BellSouth Certified Suppliers for transmission equipment, switching equipment and power equipment. BellSouth shall provide AT&T with a list of BellSouth Certified Suppliers upon request. The

BellSouth Certified Supplier(s) shall be responsible for installing AT&T's equipment and components, extending power cabling to the BellSouth power distribution frame, performing operational tests after installation is complete, and notifying BellSouth's Outside Plant engineers and AT&T upon successful completion of installation. The BellSouth Certified Supplier shall bill AT&T directly for all work performed for AT&T pursuant to this Attachment, and BellSouth shall have no liability for nor responsibility to pay such charges imposed by the BellSouth Certified Supplier. BellSouth shall make available its supplier certification program to AT&T or any supplier proposed by AT&T and will not unreasonably withhold certification. All work performed by or for AT&T shall conform to generally accepted industry standards.

7.7 Alarm and Monitoring. BellSouth may place alarms in the Remote Site Location for the protection of BellSouth equipment and facilities. AT&T shall be responsible for placement, monitoring and removal of environmental and equipment alarms used to service AT&T's Remote Collocation Space. Upon request, BellSouth will provide AT&T with applicable tariffed service(s) to facilitate remote monitoring of collocated equipment by AT&T. Both Parties shall use best efforts to notify the other of any verified hazardous conditions known to that Party.

7.8 Virtual Remote Collocation Space Relocation. In the event physical Remote Collocation Space was previously denied at a Remote Site Location due to technical reasons or space limitations, and physical Remote Collocation Space has subsequently become available, AT&T may relocate its virtual Remote Collocation arrangements to physical Remote Collocation Space arrangements and pay the appropriate fees for physical Remote Collocation Space and for the rearrangement or reconfiguration of services terminated in the virtual Remote Collocation Space arrangement, as outlined in the appropriate BellSouth tariffs. In the event that BellSouth knows when additional space for physical Remote Collocation Space may become available at the location requested by AT&T, such information will be provided to AT&T in BellSouth's written denial of physical Remote Collocation Space. To the extent that (i) physical Remote Collocation Space becomes available to AT&T within one hundred eighty (180) calendar days of BellSouth's written denial of AT&T's request for physical collocation, (ii) BellSouth had knowledge that the space was going to become available, and (iii) AT&T was not informed in the written denial that physical Remote Collocation Space would become available within such one hundred eighty (180) calendar days, then AT&T may relocate its virtual Remote Collocation Space arrangement to a physical Remote Collocation Space arrangement and will receive a credit for any nonrecurring charges previously paid for such virtual Remote Collocation Space. AT&T must arrange with a BellSouth Certified Supplier for the relocation of equipment from its virtual Remote Collocation Space to its physical Remote Collocation Space and will bear the cost of such relocation.

7.9 Virtual to Physical Conversion (In-Place). Virtual collocation arrangements may be converted to "in-place" physical arrangements if the potential conversion meets the

following four criteria: 1) there is no change in the amount of equipment or the configuration of the equipment that was in the virtual collocation arrangement; 2) the conversion of the virtual collocation arrangement will not cause the equipment or the results of that conversion to be located in a space that BellSouth has reserved for its own future needs; 3) the converted arrangement does not limit BellSouth's ability to secure its own equipment and facilities due to the location of the virtual collocation arrangement; and 4) any changes to the arrangement can be accommodated by existing power, HVAC, and other requirements. Unless otherwise specified, BellSouth will complete virtual to in-place physical collocation conversions within sixty (60) calendar days from receipt of the BFFO. The charges for a Virtual to Physical Conversion (In-Place), if any, is set forth in Section 6.2 of this Attachment.

7.10 Cancellation. If at any time prior to space acceptance, AT&T cancels its order for the Remote Collocation Space(s) (Cancellation), BellSouth will bill the applicable nonrecurring rate(s) as set forth in Exhibit B for any and all work processes for which work has begun or been completed. In no event will the charges billed by BellSouth exceed the maximum amount AT&T would have otherwise paid for the work undertaken by BellSouth if no cancellation of the order had occurred.

7.11 Licenses. AT&T, at its own expense, will be solely responsible for obtaining from governmental authorities, and any other appropriate agency, entity, or person, all rights, privileges, and licenses necessary or required to operate as a provider of telecommunications services to the public or to build-out, equip and occupy the Remote Collocation Space.

7.12 Environmental Hazard Guidelines. The Parties agree to utilize and adhere to the Environmental Hazard Guidelines identified in Exhibit A attached hereto.

8 Rates and Charges

8.1 Application Fee. BellSouth shall assess an Application Fee via a service order, which shall be issued at the time BellSouth responds that space is available pursuant to Section 6.9 (Application Response). This nonrecurring fee will be billed by BellSouth on the date that BellSouth provides an Application Response.

8.2 Rack/Bay Space. The rack/bay space charge includes reasonable charges for air conditioning, ventilation and other allocated expenses associated with maintenance of the Remote Site Location, and includes amperage necessary to power AT&T's equipment. AT&T shall pay rack/bay space charges based upon the number of racks/bays requested. BellSouth will assign Remote Collocation Space in conventional remote site rack/bay lineups where feasible.

8.3 Power. BellSouth shall make available –48 Volt (-48V) DC power for AT&T's Remote Collocation Space at a BellSouth Power Board or BellSouth Battery Distribution Fuse Bay (BDFB) at AT&T's option within the Remote Site Location. The charge for power shall be assessed as part of the recurring charge for rack/bay space. If the power requirements for AT&T's equipment exceeds the capacity available, then such power requirements shall be assessed on an individual case basis. BellSouth will revise recurring power charges to reflect a power upgrade upon notification of the completion of the upgrade by AT&T's BellSouth Certified Vendor. BellSouth will revise recurring power charges to reflect a power reduction upon BellSouth's receipt of the Power Reduction Form from AT&T certifying the completion of the power reduction, including the removal of the power cabling by AT&T's BellSouth Certified Supplier.

8.3.1 Adjacent Collocation Power. Charges for AC power will be assessed per breaker ampere per month. Rates include the provision of commercial and standby AC power, where available. When obtaining power from a BellSouth service panel, protection devices and power cables must be engineered (sized), and installed by AT&T's BellSouth Certified Supplier except that BellSouth shall engineer and install protection devices and power cables for Adjacent Collocation. AT&T's BellSouth Certified Supplier must also provide a copy of the engineering power specification prior to the equipment becoming operational. Charges for AC power shall be assessed pursuant to the rates specified in Exhibit B. AC power voltage and phase ratings shall be determined on a per location basis. At AT&T's option, AT&T may arrange for AC power in an Adjacent Collocation arrangement from a retail provider of electrical power.

8.4 Security Escort. A security escort will be required whenever AT&T or its approved agent desires access to the Remote Site Location after the one accompanied site visit allowed pursuant to Section 5 prior to completing BellSouth's Security Training requirements. Rates for a security escort are assessed according to the schedule appended hereto as Exhibit B beginning with the scheduled escort time. BellSouth will wait for one-half (1/2) hour after the scheduled time for such an escort and AT&T shall pay for such half-hour charges in the event AT&T fails to show up.

8.5 Other. If no rate is identified in the contract, the rate for the specific service or function will be negotiated by the Parties upon request by either Party.

9. Mechanics Liens

9.1 If any mechanics lien or other liens shall be filed against property of either Party (BellSouth or AT&T), or any improvement thereon by reason of or arising out of any labor or materials furnished or alleged to have been furnished or to be furnished to or for the other Party or by reason of any changes, or additions to said property made at the request or under the direction of the other Party, the other Party directing or

requesting those changes shall, within thirty (30) business days after receipt of written notice from the Party against whose property said lien has been filed, either pay such lien or cause the same to be bonded off the affected property in the manner provided by law. The Party causing said lien to be placed against the property of the other shall also defend, at its sole cost and expense, on behalf of the other, any action, suit or proceeding which may be brought for the enforcement of such liens and shall pay any damage and discharge any judgment entered thereon.

10. Inspections

10.1 BellSouth may conduct an inspection of AT&T's equipment and facilities in the Remote Collocation Space(s) prior to the activation of facilities between AT&T's equipment and equipment of BellSouth. BellSouth may conduct an inspection if AT&T adds equipment and may otherwise conduct routine inspections at reasonable intervals mutually agreed upon by the Parties. BellSouth shall provide AT&T with a minimum of forty-eight (48) hours or two (2) business days, whichever is greater, advance notice of all such inspections. All costs of such inspection shall be borne by BellSouth.

11. Security and Safety Requirements

11.1 Unless otherwise specified, AT&T will be required, at its own expense, to conduct a statewide investigation of criminal history records for each AT&T employee hired in the past five years being considered for work on the BellSouth Remote Site Location, for the states/counties where the AT&T employee has worked and lived for the past five years. Where state law does not permit statewide collection or reporting, an investigation of the applicable counties is acceptable. AT&T shall not be required to perform this investigation if an affiliated company of AT&T has performed an investigation of the AT&T employee seeking access, if such investigation meets the criteria set forth above. This requirement will not apply if AT&T has performed a pre-employment statewide investigation of criminal history records of the AT&T employee for the states/counties where the AT&T employee has worked and lived for the past five years or, where state law does not permit a statewide investigation, an investigation of the applicable counties.

11.2 AT&T will be required to administer to their personnel assigned to the BellSouth Premises security training either provided by BellSouth, or meeting criteria defined by BellSouth.

11.3 AT&T shall provide its employees and agents with picture identification, which must be worn, and visible at all times while in the Remote Collocation Space or other areas in or around the Remote Site Location. The photo Identification card shall bear, at a minimum, the employee's name and photo, and AT&T's name. BellSouth reserves the right to remove from its Remote Site Location any employee of AT&T not possessing identification issued by AT&T or who have violated any of BellSouth's policies as

outlined in the CLEC Security Training documents. AT&T shall hold BellSouth harmless for any damages resulting from such removal of its personnel from BellSouth Remote Site Location. AT&T shall be solely responsible for ensuring that any Guest(s) of AT&T is in compliance with all subsections of this Section.

11.4 AT&T shall not assign to the BellSouth Remote Site Location any personnel with records of felony criminal convictions. AT&T shall not assign to the BellSouth Remote Site Location any personnel with records of misdemeanor convictions, except for misdemeanor traffic violations, without advising BellSouth of the nature and gravity of the offense(s). BellSouth reserves the right to refuse access to any AT&T personnel who have been identified to have misdemeanor criminal convictions. Notwithstanding the foregoing, in the event that AT&T chooses not to advise BellSouth of the nature and gravity of any misdemeanor conviction, AT&T may, in the alternative, certify to BellSouth that it shall not assign to the BellSouth Remote Site Location any personnel with records of misdemeanor convictions (other than misdemeanor traffic violations).

11.4.1 AT&T shall not knowingly assign to the BellSouth Remote Site Location any individual who was a former employee of BellSouth and whose employment with BellSouth was terminated for a criminal offense whether or not BellSouth sought prosecution of the individual for the criminal offense.

11.4.2 AT&T shall not knowingly assign to the BellSouth Remote Site Location any individual who was a former supplier of BellSouth and whose access to a BellSouth Remote Site Location was revoked due to commission of a criminal offense whether or not BellSouth sought prosecution of the individual for the criminal offense.

11.5 For each AT&T employee or agent hired by AT&T within five years of being considered for work on the BellSouth Remote Site Location, who requires access to a BellSouth Remote Site Location pursuant to this Attachment, AT&T shall furnish BellSouth, prior to an employee gaining such access, a certification that the aforementioned background check and security training were completed. The certification will contain a statement that no felony convictions were found and certifying that the security training was completed by the employee. If the employee's criminal history includes misdemeanor convictions, AT&T will disclose the nature of the convictions to BellSouth at that time. In the alternative, AT&T may certify to BellSouth that it shall not assign to the BellSouth Remote Site Location any personnel with records of misdemeanor convictions other than misdemeanor traffic violations.

11.5.1 For all other AT&T employees requiring access to a BellSouth Remote Site Location pursuant to this Attachment, AT&T shall furnish BellSouth, prior to an employee gaining such access, a certification that the employee is not subject to the requirements of Section 11.5 above and that security training was completed by the employee.

11.6 At BellSouth's request, AT&T shall promptly remove from BellSouth's Remote Site Location any employee of AT&T BellSouth does not wish to grant access to its Remote Site Location 1) pursuant to any investigation conducted by BellSouth or 2) prior to the initiation of an investigation if an employee of AT&T is found interfering with the property or personnel of BellSouth or another collocated telecommunications carrier, provided that an investigation shall promptly be commenced by BellSouth.

11.7 Security Violations. BellSouth reserves the right to interview AT&T's employees, agents, or suppliers in the event of wrongdoing in or around BellSouth's property or involving BellSouth's or another collocated telecommunications carrier's property or personnel, provided that BellSouth shall provide reasonable notice to AT&T's Security representative of such interview. AT&T and its suppliers shall reasonably cooperate with BellSouth's investigation into allegations of wrongdoing or criminal conduct committed by, witnessed by, or involving AT&T's employees, agents, or suppliers. Additionally, BellSouth reserves the right to bill AT&T for all reasonable costs associated with investigations involving its employees, agents, or suppliers if it is established and mutually agreed in good faith that AT&T's employees, agents, or suppliers are responsible for the alleged act. BellSouth shall bill AT&T for BellSouth property, which is stolen or damaged where an investigation determines the culpability of AT&T's employees, agents, or suppliers and where AT&T agrees, in good faith, with the results of such investigation. AT&T shall notify BellSouth in writing immediately in the event that the AT&T discovers one of its employees already working on the BellSouth Remote Site Location is a possible security risk. Upon request of the other Party, the Party who is the employer shall discipline consistent with its employment practices, up to and including removal from BellSouth's Remote Site Location, any employee found to have violated the security and safety requirements of this section. AT&T shall hold BellSouth harmless for any damages resulting from such removal of its personnel from BellSouth's Remote Site Location.

11.8 Use of Supplies. Unauthorized use of telecommunications equipment or supplies by either Party, whether or not used routinely to provide telephone service (e.g. plug-in cards,) will be strictly prohibited and handled appropriately. Costs associated with such unauthorized use may be charged to the offending Party, as may be all associated investigative costs.

11.9 Use of Official Lines. Except for non-toll calls necessary in the performance of their work, neither Party shall use the telephones of the other Party on the BellSouth Remote Site Location. Charges for unauthorized telephone calls may be charged to the offending Party, as may be all associated investigative costs.

11.10 Accountability. Full compliance with the Security requirements of this Section shall in no way limit the accountability of either Party to the other for the improper actions of its employees.

12. Destruction of Remote Collocation Space

12.1 In the event a Remote Collocation Space is wholly or partially damaged by fire, windstorm, tornado, flood or by similar causes to such an extent as to be rendered wholly unsuitable for AT&T's permitted use hereunder, then either Party may elect within ten (10) calendar days after such damage, to terminate this Attachment with respect to the affected Remote Collocation Space, and if either Party shall so elect, by giving the other written notice of termination, both Parties shall stand released of and from further liability under the terms hereof with respect to such Remote Collocation Space. If the Remote Collocation Space shall suffer only minor damage and shall not be rendered wholly unsuitable for AT&T's permitted use, or is damaged and the option to terminate is not exercised by either Party, BellSouth covenants and agrees to proceed promptly without expense to AT&T, except for improvements not to the property of BellSouth, to repair the damage. BellSouth shall have a reasonable time within which to rebuild or make any repairs, and such rebuilding and repairing shall be subject to delays caused by storms, shortages of labor and materials, government regulations, strikes, walkouts, and causes beyond the control of BellSouth, which causes shall not be construed as limiting factors, but as exemplary only. AT&T may, at its own expense, accelerate the rebuild of its Remote Collocation Space and equipment provided however that a BellSouth Certified Supplier is used and the necessary space preparation has been completed. Rebuild of equipment must be performed by a BellSouth Certified Vendor. If AT&T' s acceleration of the project increases the cost of the project, then those additional charges will be incurred by AT&T. Where allowed and where practical, AT&T may erect a temporary facility while BellSouth rebuilds or makes repairs. In all cases where the Remote Collocation Space shall be rebuilt or repaired, AT&T shall be entitled to an equitable abatement of rent and other charges, depending upon the unsuitability of the Remote Collocation Space for AT&T's permitted use, until such Remote Collocation Space is fully repaired and restored and AT&T's equipment installed therein (but in no event later than thirty (30) calendar days after the Remote Collocation Space is fully repaired and restored). Where AT&T has placed a Remote Site Adjacent Arrangement pursuant to Section 3.4, AT&T shall have the sole responsibility to repair or replace said Remote Site Adjacent Arrangement provided herein. Pursuant to this Section, BellSouth will restore the associated services to the Remote Site Adjacent Arrangement.

13. Eminent Domain

13.1 If the whole of a Remote Collocation Space or Remote Site Adjacent Arrangement shall be taken by any public authority under the power of eminent domain, then this Attachment shall terminate with respect to such Remote Collocation Space or Remote Site Adjacent Arrangement as of the day possession shall be taken by such public authority and rent and other charges for the Remote Collocation Space or Remote Site Adjacent Arrangement shall be paid up to that day with proportionate refund by BellSouth of such rent and charges as may have been paid in advance for a period subsequent to the date of the taking. If any part of the Remote Collocation Space or

Remote Site Adjacent Arrangement shall be taken under eminent domain, BellSouth and AT&T shall each have the right to terminate this Attachment with respect to such Remote Collocation Space or Remote Site Adjacent Arrangement and declare the same null and void, by written notice of such intention to the other Party within ten (10) calendar days after such taking.

14. Relocation of AT&T's Equipment

14.1 Except as otherwise stated in this Agreement, BellSouth shall use its best efforts to prevent AT&T from having to relocate its equipment during the term of this Agreement. If AT&T, at BellSouth's request, agrees to relocate its equipment, then BellSouth shall reimburse AT&T for any and all costs reasonably associated with such relocation.

15. Nonexclusivity

15.1 AT&T understands that this Attachment is not exclusive and that BellSouth may enter into similar agreements with other Parties. Assignment of space pursuant to all such agreements shall be determined by space availability and made on a first come, first served basis.

ENVIRONMENTAL AND SAFETY PRINCIPLES

The following principles provide basic guidance on environmental and safety issues when applying for and establishing Physical Collocation arrangements.

1. GENERAL PRINCIPLES

1.1 Compliance with Applicable Law. BellSouth and AT&T agree to comply with applicable federal, state, and local environmental and safety laws and regulations including U.S. Environmental Protection Agency (USEPA) regulations issued under the Clean Air Act (CAA), Clean Water Act (CWA), Resource Conservation and Recovery Act (RCRA), Comprehensive Environmental Response, Compensation and Liability Act (CERCLA), Superfund Amendments and Reauthorization Act (SARA), the Toxic Substances Control Act (TSCA), and OSHA regulations issued under the Occupational Safety and Health Act of 1970, as amended and NFPA and National Electrical Codes (NEC) and the NESC ("Applicable Laws"). Each Party shall notify the other if compliance inspections are conducted by regulatory agencies and/or citations are issued that relate to any aspect of this Attachment.

1.2 Notice. BellSouth and AT&T shall provide notice to the other, including Material Safety Data Sheets (MSDSs), of known and recognized physical hazards or Hazardous Chemicals existing on site or brought on site. A Hazardous Chemical inventory list is posted on an OSHA Poster and updated annually at each Central Office. This Poster is normally located near the front entrance of the building or in the lounge area. Each Party is required to provide specific notice for known potential Imminent Danger conditions. AT&T should contact 1-800-743-6737 for any BellSouth MSDS required.

1.3 Practices/Procedures. BellSouth may make available additional environmental control procedures for AT&T to follow when working at a BellSouth Remote Site Location (See Section 2, below). These practices/procedures will represent the regular work practices required to be followed by the employees and suppliers of BellSouth for environmental protection. AT&T will require its suppliers, agents and others accessing the BellSouth Remote Site Location to comply with these practices. Section 2 lists the Environmental categories where BST practices should be followed by AT&T when operating in the BellSouth Remote Site Location.

1.4 Environmental and Safety Inspections. BellSouth reserves the right to inspect the AT&T space with proper notification. BellSouth reserves the right to stop any AT&T work operation that imposes Imminent Danger to the environment, employees or other persons in the area or Remote Site Location.

1.5 Hazardous Materials Brought On Site. Any hazardous materials brought into, used, stored or abandoned at the BellSouth Remote Site Location by AT&T are owned by AT&T. AT&T will indemnify BellSouth for claims, lawsuits or damages to persons or property caused by these materials. Without prior written BellSouth approval, no substantial new safety or environmental hazards can be created by AT&T or different hazardous materials used by AT&T at the BellSouth Remote Site Location. AT&T must demonstrate adequate emergency response capabilities for its materials used or remaining at the BellSouth Remote Site Location.

1.6 Spills and Releases. When contamination is discovered at a BellSouth Remote Site Location, either Party discovering the condition must notify the other Party. All Spills or Releases of regulated materials will immediately be reported by AT&T to BellSouth.

1.7 Coordinated Environmental Plans and Permits. BellSouth and AT&T will coordinate plans, permits or information required to be submitted to government agencies, such as emergency response plans, spill prevention control and countermeasures (SPCC) plans and community reporting. If fees are associated with filing, BellSouth and AT&T will develop a cost sharing procedure. If BellSouth's permit or EPA identification number must be used, AT&T must comply with all of BellSouth's permit conditions and environmental processes, including environmental "best management practices (BMP)" (see Section 2, below) and/or selection of BST disposition vendors and disposal sites.

1.8 Environmental and Safety Indemnification. BellSouth and AT&T shall indemnify, defend and hold harmless the other Party from and against any claims (including, without limitation, third-party claims for personal injury or death or real or personal property damage), judgments, damages, (including direct and indirect damages, and punitive damages), penalties, fines, forfeitures, costs, liabilities, interest and losses arising in connection with the violation or alleged violation of any Applicable Law or contractual obligation or the presence or alleged presence of contamination arising out of the acts or omissions of the indemnifying Party, its agents, suppliers, or employees concerning its operations at the Remote Site Location.

2. CATEGORIES FOR CONSIDERATION OF ENVIRONMENTAL ISSUES

2.1 When performing functions that fall under the following Environmental categories on BellSouth's Remote Site Location, AT&T agrees to comply with the applicable sections of the current issue of BellSouth's Environmental and Safety Methods and Procedures (M&Ps), incorporated herein by this reference. AT&T further agrees to cooperate with BellSouth to ensure that AT&T's employees, agents, and/or suppliers are knowledgeable of and satisfy those provisions of BellSouth's Environmental M&Ps which apply to the specific Environmental function being performed by AT&T, its employees, agents and/or suppliers.

2.1.1 The most current version of reference documentation must be requested from AT&T's BellSouth Regional Collocation Manager (RCM) Representative.

ENVIRONMENTAL CATEGORIES	ENVIRONMENTAL ISSUES	ADDRESSED BY THE FOLLOWING DOCUMENTATION
Disposal of hazardous material or other regulated material (e.g., batteries, fluorescent tubes, solvents & cleaning materials)	Compliance with all applicable local, state, & federal laws and regulations Pollution liability insurance EVET approval of supplier	• Std T&C 450 • Fact Sheet Series 17000 • Std T&C 660-3 • Approved Environmental Vendor List (Contact RCM

		Representative)
Emergency response	Hazmat/waste release/spill fire safety emergency	• Fact Sheet Series 1700 • Building Emergency Operations Plan (EOP) (specific to and located on Remote Site Location)
Contract labor/outsourcing for services with environmental implications to be performed on BellSouth Remote Site Location (e.g., disposition of hazardous material/waste; maintenance of storage tanks)	Compliance with all applicable local, state, & federal laws and regulations Performance of services in accordance with BST's environmental M&Ps Insurance	• Std T&C 450 • Std T&C 450-B • (Contact RCM Representative for copy of appropriate E/S M&Ps.) • Std T&C 660
Transportation of hazardous material	Compliance with all applicable local, state, & federal laws and regulations Pollution liability insurance EVET approval of supplier	• Std T&C 450 • Fact Sheet Series 17000 • Std T&C 660-3 • Approved Environmental Vendor List (Contact RCM Representative)
Maintenance/operations work which may produce a waste Other maintenance work	Compliance with all applicable local, state, & federal laws and regulations Protection of BST employees and equipment	• Std T&C 450 • 29CFR 1910.147 (OSHA Standard) • 29CFR 1910 Subpart O (OSHA Standard)
Janitorial services	All waste removal and disposal must conform to all applicable federal, state and local regulations All Hazardous Material and Waste Asbestos notification and protection of employees and equipment	• –Procurement Manager (CRES Related Matters)-BST Supply Chain Services • Fact Sheet Series 17000 • GU-BTEN-001BT, Chapter 3 • BSP 010-170-001BS (Hazcom)

Manhole cleaning	Compliance with all applicable local, state, & federal laws and regulations Pollution liability insurance EVET approval of supplier	• Std T&C 450 • Fact Sheet 14050 • BSP 620-145-011PR Issue A, August 1996 • Std T&C 660-3 • Approved Environmental Vendor List (Contact RCM Representative)
Removing or disturbing building materials that may contain asbestos	Asbestos work practices	• GU-BTEN-001BT, Chapter 3 For questions regarding removing or disturbing materials that contain asbestos, call the BellSouth Building Service Center: AL, MS, TN, KY & LA (local area code) 557-6194 FL, GA, NC & SC (local area code) 780-2740

3. DEFINITIONS

Generator. Under RCRA, the person whose act produces a Hazardous Waste, as defined in 40 CFR 261, or whose act first causes a Hazardous Waste to become subject to regulation. The Generator is legally responsible for the proper management and disposal of Hazardous Wastes in accordance with regulations.

Hazardous Chemical. As defined in the U.S. Occupational Safety and Health (OSHA) hazard communication standard (29 CFR 1910.1200), any chemical which is a health hazard or physical hazard.

Hazardous Waste. As defined in section 1004 of RCRA.

Imminent Danger. Any conditions or practices at a remote site location which are such that a danger exists which could reasonably be expected to cause immediate death or serious harm to people or immediate significant damage to the environment or natural resources.

Spill or Release. As defined in Section 101 of CERCLA.

4. ACRONYMS

BST – BellSouth Telecommunications

CRES – Corporate Real Estate and Services (formerly PS&M)

DEC/LDEC - Department Environmental Coordinator/Local Department Environmental Coordinator

E/S – Environmental/Safety

EVET - Environmental Vendor Evaluation Team

GU-BTEN-001BT - BellSouth Environmental Methods and Procedures

NESC - National Electrical Safety Codes

P&SM - Property & Services Management

RCM – Regional Collocation Manager

Std T&C - Standard Terms & Conditions

COLLOCATION - South Carolina														Attachment: 4 Exh B			
CATEGORY	RATE ELEMENTS	Interim	Zone	BCS	USOC	RATES($)					Svc Order Submitted Elec per LSR	Svc Order Submitted Manually per LSR	Incremental Charge - Manual Svc Order vs. Electronic-1st	Incremental Charge - Manual Svc Order vs. Electronic-Add'l	Incremental Charge - Manual Svc Order vs. Electronic-Disc 1st	Incremental Charge - Manual Svc Order vs. Electronic-Disc Add'l
						Rec	Nonrecurring		Nonrecurring Disconnect		OSS Rates($)					
							First	Add'l	First	Add'l	SOMEC	SOMAN	SOMAN	SOMAN	SOMAN	SOMAN
PHYSICAL COLLOCATION																
Application																
	Physical Collocation - Initial Application Fee			CLO	PE1BA		1,883.67		0.51							
	Physical Collocation - Subsequent Application Fee			CLO	PE1CA		1,570.10		0.51							
	Physical Collocation - Co-Carrier Cross Connects/Direct Connect, Application Fee, per application			CLO	PE1DT		584.42									
	Physical Collocation Administrative Only - Application Fee			CLO	PE1BL		743.66									
	Physical Collocation - Split Billing between MRC and NRC, per Application			CLO	PE1S8		I 135.00	S 100.00								
Space Preparation																
	Physical Collocation - Floor Space, per sq feet			CLO	PE1PJ	3.95										
	Physical Collocation - Space Enclosure, welded wire, first 50 square feet			CLO	PE1BX	197.69										
	Physical Collocation - Space enclosure, welded wire, first 100 square feet			CLO	PE1BW	219.19										
	Physical Collocation - Space enclosure, welded wire, each additional 50 square feet			CLO	PE1CW	21.50										
	Physical Collocation - Space Preparation - C.O. Modification per square ft.			CLO	PE1SK	2.75										
	Physical Collocation - Space Preparation, Common Systems Modifications-Cageless, per square foot			CLO	PE1SL	3.24										
	Physical Collocation - Space Preparation - Common Systems Modifications-Caged, per cage			CLO	PE1SM	110.16										
	Physical Collocation - Space Preparation - Firm Order Processing			CLO	PE1SJ		602.05									
	Physical Collocation - Space Availability Report, per Central Office Requested			CLO	PE1SR		1,077.57									
Power																
	Physical Collocation - Power, -48V DC Power - per Fused Amp Requested			CLO	PE1PL	9.19										
	Physical Collocation - Power, 120V AC Power, Single Phase, per Breaker Amp			CLO	PE1FB	5.67										
	Physical Collocation - Power, 240V AC Power, Single Phase, per Breaker Amp			CLO	PE1FD	11.36										
	Physical Collocation - Power, 120V AC Power, Three Phase, per Breaker Amp			CLO	PE1FE	17.03										
	Physical Collocation - Power, 277V AC Power, Three Phase, per Breaker Amp			CLO	PE1FG	39.33										
Cross Connects (Cross Connects, Co-Carrier Cross Connects, and Ports)																
	Physical Collocation - 2-wire cross-connect, loop, provisioning			UEANL,UEQ, UNCNX, UEA, UCL, UAL, UHL, UDN, UNCVX	PE1P2	0.0341	12.32	11.83	6.04	5.45						
	Physical Collocation - 4-wire cross-connect, loop, provisioning			UEA, UHL, UNCVX, UNCDX, UCL, UDL	PE1P4	0.0682	12.42	11.90	6.40	5.74						
	Physical Collocation -DS1 Cross-Connect for Physical Collocation, provisioning			WDS1L, WDS1S, UXTD1, ULDD1, USLEL, UNLD1, U1TD1, UNC1X, UEPSR, UEPSB, UEPSE, UEPSP, USL, UEPEX, UEPDX	PE1P1	1.12	22.08	15.96	6.42	5.80						

COLLOCATION - South Carolina													Attachment: 4 Exh B			
CATEGORY	RATE ELEMENTS	Interim	Zone	BCS	USOC	RATES($)					Svc Order Submitted Elec per LSR	Svc Order Submitted Manually per LSR	Incremental Charge - Manual Svc Order vs. Electronic-1st	Incremental Charge - Manual Svc Order vs. Electronic-Add'l	Incremental Charge - Manual Svc Order vs. Electronic-Disc 1st	Incremental Charge - Manual Svc Order vs. Electronic-Disc Add'l
						Rec	Nonrecurring		Nonrecurring Disconnect		OSS Rates($)					
							First	Add'l	First	Add'l	SOMEC	SOMAN	SOMAN	SOMAN	SOMAN	SOMAN
	Physical Collocation - DS3 Cross-Connect, provisioning			UE3, U1TD3, UXTD3, UXTS1, UNC3X, UNCSX, ULDD3, U1TS1, ULDS1, UNLD3, UEPEX, UEPDX, UEPSR, UEPSB, UEPSE, UEPSP	PE1P3	14.21	20.94	15.23	7.39	5.93						
	Physical Collocation - 2-Fiber Cross-Connect			CLO, ULDO3, ULD12, ULD48, U1TO3, U1T12, U1T48, UDLO3, UDL12, UDF	PE1F2	2.82	20.94	15.23	7.40	5.93						
	Physical Collocation - 4-Fiber Cross-Connect			ULDO3, ULD12, ULD48, U1TO3, U1T12, U1T48, UDLO3, UDL12, UDF, UDFCX	PE1F4	5.01	25.61	19.90	9.73	8.26						
	Physical Collocation - Co-Carrier Cross Connects/Direct Connect - Fiber Cable Support Structure, per linear foot, per cable.			CLO	PE1ES	0.001										
	Physical Collocation - Co-Carrier Cross Connect/Direct Connect - Copper/Coax Cable Support Structure, per linear foot, per cable.			CLO	PE1DS	0.0015										
	Physical Collocation 2-Wire Cross Connect, Port			UEPSR, UEPSP, UEPSE, UEPSB, UEPSX, UEP2C	PE1R2	0.0341	12.32	11.83	6.04	5.45		15.69				
	Physical Collocation 4-Wire Cross Connect, Port			UEPEX, UEPDD	PE1R4	0.0682	12.42	11.90	6.40	5.74		15.69				
Security																
	Physical Collocation - Security Escort for Basic Time - normally scheduled work, per half hour			CLO	PE1BT		16.96	10.75								
	Physical Collocation - Security Escort for Overtime - outside of normally scheduled working hours on a scheduled work day, per half hour			CLO	PE1OT		22.10	13.89								
	Physical Collocation - Security Escort for Premium Time - outside of scheduled work day, per half hour			CLO	PE1PT		27.23	17.02								
	Physical Collocation - Security Access System, Security System, per Central Office			CLO	PE1AX	74.72										
	Physical Collocation -Security Access System - New Card Activation, per Card Activation (First), per State			CLO	PE1A1	0.0601	27.85									
	Physical Collocation-Security Access System-Administrative Change, existing Access Card, per Request, per State, per Card			CLO	PE1AA		7.81									
	Physical Collocation - Security Access System - Replace Lost or Stolen Card, per Card			CLO	PE1AR		22.83									
	Physical Collocation - Security Access - Initial Key, per Key			CLO	PE1AK		13.13									
	Physical Collocation - Security Access - Key, Replace Lost or Stolen Key, per Key			CLO	PE1AL		13.13									
CFA																
	Physical Collocation - CFA Information Resend Request, per premises, per arrangement, per request			CLO	PE1C9		77.71									
Cable Records - Note: The rates in the First & Additional columns will actually be billed as "Initial I" and "Subsequent S" respectively																
	Physical Collocation - Cable Records, per request			CLO	PE1CR		I 760.98	S 489.2	133.29							
	Physical Collocation, Cable Records, VG/DS0 Cable, per cable record (maximum 3600 records)			CLO	PE1CD		327.65		189.54							
	Physical Collocation, Cable Records, VG/DS0 Cable, per each 100 pair			CLO	PE1CO		4.82		5.91							
	Physical Collocation, Cable Records, DS1, per T1 TIE			CLO	PE1C1		2.26		2.77							
	Physical Collocation, Cable Records, DS3, per T3 TIE			CLO	PE1C3		7.90		9.68							

COLLOCATION - South Carolina														Attachment: 4 Exh B			
CATEGORY		RATE ELEMENTS	Interim	Zone	BCS	USOC	RATES($)					Svc Order Submitted Elec per LSR	Svc Order Submitted Manually per LSR	Incremental Charge - Manual Svc Order vs. Electronic-1st	Incremental Charge - Manual Svc Order vs. Electronic-Add'l	Incremental Charge - Manual Svc Order vs. Electronic-Disc 1st	Incremental Charge - Manual Svc Order vs. Electronic-Disc Add'l
							Rec	Nonrecurring		Nonrecurring Disconnect		OSS Rates($)					
								First	Add'l	First	Add'l	SOMEC	SOMAN	SOMAN	SOMAN	SOMAN	SOMAN
		Physical Collocation - Cable Records, Fiber Cable, per cable record (maximum 99 records)			CLO	PE1CB		84.68		77.30							
		Physical Collocation, Cable Records,CAT5/RJ45			CLO	PE1C5		2.26		2.77							
	Virtual to Physical																
		Physical Collocation - Virtual to Physical Collocation Relocation, per Voice Grade Circuit			CLO	PE1BV		33.00									
		Physical Collocation - Virtual to Physical Collocation Relocation, per DSO Circuit			CLO	PE1BO		33.00									
		Physical Collocation - Virtual to Physical Collocation Relocation, per DS1 Circuit			CLO	PE1B1		52.00									
		Physical Collocation - Virtual to Physical Collocation Relocation, per DS3 Circuit			CLO	PE1B3		52.00									
		Physical Collocation - Virtual to Physical Collocation In-Place, Per Voice Grade Circuit			CLO	PE1BR		23.00									
		Physical Collocation Virtual to Physical Collocation In-Place, Per DSO Circuit			CLO	PE1BP		23.00									
		Physical Collocation - Virtual to Physical Collocation In-Place, Per DS1 Circuit			CLO	PE1BS		33.00									
		Physical Collocation - Virtual to Physical Collocation In-Place, per DS3 Circuit			CLO	PE1BE		37.00									
	Entrance Cable																
		Physical Collocation - Fiber Cable Installation, Pricing, non-recurring charge, per Entrance Cable			CLO	PE1BD		794.22		22.54							
		Physical Collocation - Fiber Cable Support Structure, per Entrance Cable			CLO	PE1PM	21.33										
		Physical Collocation - Fiber Entrance Cable Installation, per Fiber			CLO	PE1ED		3.87									
VIRTUAL COLLOCATION																	
	Application																
		Virtual Collocation - Application Fee			AMTFS	EAF		1,207.95		0.51							
		Virtual Collocation - Co-Carrier Cross Connects/Direct Connect, Application Fee, per application			AMTFS	VE1CA		584.42									
		Virtual Collocation Administrative Only - Application Fee			AMTFS	VE1AF		743.66									
		Virtual Collocation - Split Billing between MRC and NRC, per Application			AMTFS	VE1S8		I 135.00	S 100.00								
	Space Preparation																
		Virtual Collocation - Floor Space, per sq. ft.			AMTFS	ESPVX	3.95										
	Power																
		Virtual Collocation - Power, per fused amp			AMTFS	ESPAX	9.19										
	Cross Connects (Cross Connects, Co-Carrier Cross Connects, and Ports)																
		Virtual Collocation - 2-wire cross-connect, loop, provisioning			UEANL, UEA, UDN, UAL, UHL, UCL, UEQ, UNCVX, UNCDX, UNCNX	UEAC2	0.0317	12.32	11.83	6.04	5.45						
		Virtual Collocation - 4-wire cross-connect, loop, provisioning			UEA, UHL, UCL, UDL, UNCVX, UNCDX	UEAC4	0.0634	12.42	11.90	6.40	5.74						
		Virtual collocation - Special Access & UNE,cross-connect per DS1			ULR, UXTD1, UNC1X, ULDD1, U1TD1, USLEL, UNLD1, USL, UEPEX, UEPDX	CNC1X	1.12	22.08	15.96	6.42	5.80						
		Virtual collocation - Special Access & UNE, cross-connect per DS3			USL, UE3, U1TD3, UXTS1, UXTD3, UNC3X, UNCSX, ULDD3, U1TS1, ULDS1, UDLSX, UNLD3	CND3X	14.21	20.94	15.23	7.39	5.93						

COLLOCATION - South Carolina													Attachment: 4 Exh B			
CATEGORY	RATE ELEMENTS	Interim	Zone	BCS	USOC	RATES($)					Svc Order Submitted Elec per LSR	Svc Order Submitted Manually per LSR	Incremental Charge - Manual Svc Order vs. Electronic-1st	Incremental Charge - Manual Svc Order vs. Electronic-Add'l	Incremental Charge - Manual Svc Order vs. Electronic-Disc 1st	Incremental Charge - Manual Svc Order vs. Electronic-Disc Add'l
						Rec	Nonrecurring		Nonrecurring Disconnect		OSS Rates($)					
							First	Add'l	First	Add'l	SOMEC	SOMAN	SOMAN	SOMAN	SOMAN	SOMAN
	Virtual Collocation - 2-Fiber Cross Connects			UDL12, UDLO3, U1T48, U1T12, U1TO3, ULDO3, ULD12, ULD48, UDF	CNC2F	2.86	20.94	15.23	7.40	5.93						
	Virtual Collocation - 4-Fiber Cross Connects			UDL12, UDLO3, U1T48, U1T12, U1TO3, ULDO3, ULD12, ULD48, UDF	CNC4F	5.71	25.61	19.90	9.73	8.26						
	Virtual Collocation - Co-Carrier Cross Connects/Direct Connect - Fiber Cable Support Structure, per linear foot, per cable			AMTFS	VE1CB	0.001										
	Virtual Collocation - Co-Carrier Cross Connects/Direct Connect - Copper/Coax Cable Support Structure, per linear foot, per cable			AMTFS	VE1CD	0.0015										
	Virtual Collocation 2-Wire Cross Connect, Port			UEPSX, UEPSB, UEPSE, UEPSP, UEPSR, UEP2C	VE1R2	0.0317	12.32	11.83	6.04	5.45						
	Virtual Collocation 4-Wire Cross Connect, Port			UEPDD, UEPEX	VE1R4	0.0634	12.42	11.90	6.40	5.74						
CFA																
	Virtual Collocation - CFA Information Resend Request, per Premises, per Arrangement, per request			AMTFS	VE1QR		77.71									
Cable Records - Note: The rates in the First & Additional columns will actually be billed as "Initial I" & "Subsequent S" respectively																
	Virtual Collocation Cable Records - per request			AMTFS	VE1BA		760.98	489.20	133.29							
	Virtual Collocation Cable Records - VG/DS0 Cable, per cable record			AMTFS	VE1BB		327.65		189.54							
	Virtual Collocation Cable Records - VG/DS0 Cable, per each 100 pair			AMTFS	VE1BC		4.82		5.91							
	Virtual Collocation Cable Records - DS1, per T1TIE			AMTFS	VE1BD		2.26		2.77							
	Virtual Collocation Cable Records - DS3, per T3TIE			AMTFS	VE1BE		7.90		9.68							
	Virtual Collocation Cable Records - Fiber Cable, per 99 fiber records			AMTFS	VE1BF		84.68		77.30							
	Virtual Collocation Cable Records - CAT 5/RJ45			AMTFS	VE1B5		2.26		2.77							
Security																
	Virtual collocation - Security escort, basic time, normally scheduled work hours			AMTFS	SPTBX		16.96	10.75								
	Virtual collocation - Security escort, overtime, outside of normally scheduled work hours on a normal working day			AMTFS	SPTOX		22.10	13.89								
	Virtual collocation - Security escort, premium time, outside of a scheduled work day			AMTFS	SPTPX		27.23	17.02								
Maintenance																
	Virtual collocation - Maintenance in CO - Basic, per half hour			AMTFS	CTRLX		27.99	10.75								
	Virtual collocation - Maintenance in CO - Overtime, per half hour			AMTFS	SPTOM		36.56	13.89								
	Virtual collocation - Maintenance in CO - Premium per half hour			AMTFS	SPTPM		45.12	17.02								
Entrance Cable																
	Virtual Collocation - Cable Installation Charge, per cable			AMTFS	ESPCX		794.22		22.54							
	Virtual Collocation - Cable Support Structure, per cable			AMTFS	ESPSX	18.66										
COLLOCATION IN THE REMOTE SITE																
Physical Remote Site Collocation																
	Physical Collocation in the Remote Site - Application Fee			CLORS	PE1RA		308.38		168.60							
	Cabinet Space in the Remote Site per Bay/ Rack			CLORS	PE1RB	246.44										
	Physical Collocation in the Remote Site - Security Access - Key			CLORS	PE1RD		13.13									
	Physical Collocation in the Remote Site - Space Availability Report per Premises Requested			CLORS	PE1SR		116.13									

COLLOCATION - South Carolina													Attachment: 4 Exh B			
CATEGORY	RATE ELEMENTS	Interim	Zone	BCS	USOC	RATES($)					Svc Order Submitted Elec per LSR	Svc Order Submitted Manually per LSR	Incremental Charge - Manual Svc Order vs. Electronic-1st	Incremental Charge - Manual Svc Order vs. Electronic-Add'l	Incremental Charge - Manual Svc Order vs. Electronic-Disc 1st	Incremental Charge - Manual Svc Order vs. Electronic-Disc Add'l
						Rec	Nonrecurring		Nonrecurring Disconnect		OSS Rates($)					
							First	Add'l	First	Add'l	SOMEC	SOMAN	SOMAN	SOMAN	SOMAN	SOMAN
	Physical Collocation in the Remote Site - Remote Site CLLI Code Request, per CLLI Code Requested			CLORS	PE1RE		37.64									
	Remote Site DLEC Data (BRSDD), per Compact Disk, per CO			CLORS	PE1RR		234.50									
	Physical Collocation - Security Escort for Basic Time - normally scheduled work, per half hour			CLORS	PE1BT		16.96	10.75								
	Physical Collocation - Security Escort for Overtime - outside of normally scheduled working hours on a scheduled work day, per half hour			CLORS	PE1OT		22.10	13.89								
	Physical Collocation - Security Escort for Premium Time - outside of scheduled work day, per half hour			CLORS	PE1PT		27.23	17.02								
Adjacent Remote Site Collocation																
	Remote Site-Adjacent Collocation-Application Fee			CLORS	PE1RU		755.62	755.62								
	Remote Site-Adjacent Collocation - Real Estate, per square foot			CLORS	PE1RT	0.134										
	Remote Site-Adjacent Collocation - AC Power, per breaker amp			CLORS	PE1RS	6.27										
NOTE: If Security Escort and/or Add'l Engineering Fees become necessary for adjacent remote site collocation, the Parties will negotiate appropriate rates.																
Virtual Remote Site Collocation																
	Virtual Collocation in the Remote Site - Application Fee			VE1RS	VE1RB		616.76		337.19							
	Virtual Collocation in the Remote Site - Per Bay/Rack of Space			VE1RS	VE1RC	246.44										
	Virtual Collocation in the Remote Site - Space Availability Report per Premises requested			VE1RS	VE1RR		232.25									
	Virtual Collocation in the Remote Site - Remote Site CLLI Code Request, per CLLI Code Requested			VE1RS	VE1RL		75.27									
ADJACENT COLLOCATION																
	Adjacent Collocation - Space Charge per Sq. Ft.			CLOAC	PE1JA	0.0939										
	Adjacent Collocation - Electrical Facility Charge per Linear Ft.			CLOAC	PE1JC	6.40										
	Adjacent Collocation - 2-Wire Cross-Connects			UEANL,UEQ,UEA,UCL, UAL, UHL, UDN	PE1JE	0.0264	12.32	11.83	6.04	5.45						
	Adjacent Collocation - 4-Wire Cross-Connects			UEA,UHL,UDL,UCL	PE1JF	0.0527	12.42	11.90	6.40	5.74						
	Adjacent Collocation - DS1 Cross-Connects			USL	PE1JG	1.03	22.08	15.96	6.42	5.80						
	Adjacent Collocation - DS3 Cross-Connects			UE3	PE1JH	14.00	20.94	15.23	7.39	5.93						
	Adjacent Collocation - 2-Fiber Cross-Connect			CLOAC	PE1JJ	2.37	20.94	15.23	7.40	5.93						
	Adjacent Collocation - 4-Fiber Cross-Connect			CLOAC	PE1JK	4.53	25.61	19.90	9.73	8.26						
	Adjacent Collocation - Application Fee			CLOAC	PE1JB		1,580.20									
	Adjacent Collocation - 120V, Single Phase Standby Power Rate per AC Breaker Amp			CLOAC	PE1JL	5.67										
	Adjacent Collocation - 240V, Single Phase Standby Power Rate per AC Breaker Amp			CLOAC	PE1JM	11.36										
	Adjacent Collocation - 120V, Three Phase Standby Power Rate per AC Breaker Amp			CLOAC	PE1JN	17.03										
	Adjacent Collocation - 277V, Three Phase Standby Power Rate per AC Breaker Amp			CLOAC	PE1JO	39.33										
Note: Rates displaying an "I" in Interim column are interim as a result of a Commission order.																

Attachment 5

Access to Numbers and Number Portability

TABLE OF CONTENTS

1. Non-Discriminatory Access to Telephone Numbers.....3

2. LOCAL SERVICE PROVIDER Number Portability - Permanent Solution (LNP).....4

3. Operational Support System (OSS) Rates 6

ACCESS TO NUMBERS AND NUMBER PORTABILITY

1. NON-DISCRIMINATORY ACCESS TO TELEPHONE NUMBERS

1.1 During the term of this Agreement, where AT&T is utilizing its own switch, AT&T shall contact the appropriate numbering administrator for the assignment of numbering resources.

1.2 Where BellSouth provides resold services to AT&T, BellSouth will provide AT&T with on-line access to intermediate telephone numbers as defined by applicable FCC rules and regulations on a first come first served basis. AT&T acknowledges that such access to numbers shall be in accordance with the appropriate FCC rules and regulations. AT&T may designate up to a forecasted six (6) months supply of available numbers as intermediate (an available number provided to AT&T) telephone numbers per rate center if the following conditions are met:

1.2.1 AT&T must: (1) indicate that all of the intermediate numbers currently held by AT&T in each rate center where AT&T will be requesting intermediate telephone numbers have six (6) or less months to exhaust; (2) supply projected monthly telephone number demand on a rate center basis for the coming twelve (12) months for each rate center where AT&T will be requesting intermediate telephone numbers; and, (3) demonstrate that the utilization level on current intermediate numbers held by AT&T in the rate center where AT&T is requesting telephone numbers has reached at least 70%. The above information will be provided by AT&T by submitting to BellSouth a fully completed "CO Code Assignments Months To Exhaust Certification Worksheet – TN Level" ("MTE Worksheet"), Appendix B to the Central Office Code (NXX) Assignments Guidelines, INC 95-0407-008 for each rate center where AT&T will be requesting intermediate telephone numbers. The utilization level is calculated by dividing all intermediate numbers currently assigned by AT&T to End Users by the total number of intermediate numbers held by AT&T in the rate center and multiplying the result by one hundred (100). After June 30, 2004, rate center utilization level must be at 75% (Part F of the MTE Worksheet).

1.2.2 If fulfilling AT&T's request for intermediate numbers results in BellSouth having to submit a request for additional telephone numbers to a national numbering administrator (either NANPA CO Code Administration or NeuStar Pooling Administration or their successors), BellSouth will submit the required numbering request to the national numbering administrator to satisfy AT&T's request for intermediate numbers. BellSouth will also pursue all appropriate steps (including submitting a safety valve request (petition) to the appropriate Commission if the

numbering request is denied by the national administrator) to satisfy AT&T's request for intermediate numbers. In these cases, BellSouth is not obligated to fulfill the request by AT&T for intermediate numbers unless, and until, BellSouth's request for additional numbering resources is granted.

1.2.3 AT&T agrees to supply supporting information for any numbering request and/or safety valve request that BellSouth files pursuant to Section 1.2.2 above.

1.3 AT&T acknowledges that there may be instances where there is an industry shortage of available telephone numbers in a NPA. These instances occur where a jeopardy status has been declared by NANPA and the industry has determined that limiting the assignment of new numbers is the appropriate method to employ until the jeopardy can be alleviated. In such NPA jeopardy situations where assignment of new numbers is restricted as per the jeopardy guidelines developed by the industry, BellSouth may request that AT&T cancel all or a portion of its unassigned intermediate numbers. AT&T's consent to BellSouth's request shall not be unreasonably withheld.

2. LOCAL SERVICE PROVIDER NUMBER PORTABILITY - PERMANENT SOLUTION (LNP)

2.1 The Parties will offer Number Portability in accordance with rules, regulations and guidelines adopted by the Commission, the FCC and industry fora. BellSouth is currently offering permanent Local Number Portability in all of its serving areas.

2.2 To limit service outage, BellSouth and AT&T will adhere to the process flows and cutover guidelines for porting numbers as outlined in the LNP Reference Guide, as amended from time to time. The LNP Reference Guide, incorporated herein by reference, is accessible via the Internet at the following site: http://www.interconnection.bellsouth.com. All intervals referenced in the LNP Reference Guide shall apply to both BellSouth and AT&T. No changes to the LNP Reference Guide will be executed by BellSouth without following the Change Control Process, where applicable.

2.2.1 Unless otherwise mutually agreed to by the Parties, such agreement not to be unreasonably withheld, BellSouth will provide ordering and provisioning support for AT&T's LNP requests during normal business hours which are currently Monday through Friday 8 a.m. until 6 p.m. EST and 8 a.m. until 6 p.m. CST. Ordering and provisioning support required by AT&T outside of these hours will be considered outside of normal business hours and will be subject to overtime billing. For stand-alone LNP where LRN unconditional or 10-digit triggers are set, AT&T may port numbers during times that are supported by NPAC twenty-four (24) hours a day, seven (7) days a week. BellSouth will provide maintenance assistance to AT&T twenty-four (24) hours a day, seven (7) days a week to

resolve issues arising from the porting of numbers for problems isolated to the BellSouth network.

2.2.2 BellSouth will support AT&T's requests to port numbers twenty-four (24) hours a day, seven (7) days a week, regardless of unconditional or 10 digit triggers. The only exceptions to this will be those times when BellSouth's systems are undergoing routine maintenance, when NPAC systems are unavailable, or when unexpected outages occur.

2.3 Unless otherwise mutually agreed by the Parties, such agreement not to be unreasonably withheld, AT&T will provide ordering and provisioning support for Bellsouth's LNP requests during normal business hours, which are currently Monday through Friday, 8 a.m. until 8:00 p.m. EST.

2.4 The Parties will set Location Routing Number (LRN) unconditional or 10-digit triggers where applicable. Where triggers are set, the porting Party will remove the ported number at the same time the trigger is removed.

2.5 A trigger order is a service order issued in advance of the porting of a number. A trigger order 1) initiates call queries to the AIN SS7 network in advance of the number being ported; and 2) provides for the new service provider to be in control of when a number ports.

2.6 Where triggers are not set, the Parties shall coordinate the porting of the number between service providers so as to minimize service interruptions to the End User. Neither BellSouth's or AT&T's, as may be applicable, systems nor technicians shall disconnect the customer's service or numbers from their respective switch prior to the scheduled port time, unless mutually agreed to by both Parties.

2.7 BellSouth and AT&T will work cooperatively to implement changes to LNP process flows ordered by the FCC or as recommended by standard industry forums addressing LNP.

2.8 Project Management Guidelines for LNP

2.8.1 Pursuant to the provisions in section 23.1 of the General Terms and Conditions, BellSouth will Project Manage an LNP order from AT&T as set forth on the BellSouth website.

2.8.2 As used herein, the term "Project Manage" means that the Parties shall dedicate project managers to negotiate terms required to insure a seamless transition. Negotiations shall include, but not be limited to, implementation details, due dates, cut-over intervals and times, coordination of technical resources and completion notices. Commencement of negotiations shall occur by no later than close of business on the following business day after BST receives a valid LSR and AT&T receives a Firm Order Commitment (FOC).

2.9 Excluded Numbers

2.9.1 Neither Party shall be required to provide number portability for excluded numbers (e.g., 500 and 900 NPAs, 950 and 976 NXX number services, and others as excluded by FCC rulings issued from time to time) under this Agreement or applicable industry agreements.

2.10 Mass Calling Numbers/Choke Networks

2.10.1 Mass Call Numbers will not be ported with LRN (i.e.; there will be no database queries made for mass call number NXX's associated with choke networks). Until the FCC has adopted a standard for porting mass call numbers, the Parties will work cooperatively with each other to direct calls to the mass calling network using arrangements that are economical and efficient for both Parties.

2.10.2 If Integrated Services Digital Network User Part ("ISUP") signaling is used, BellSouth and AT&T shall provide, if technically feasible, the Jurisdiction Information Parameter ("JIP") in the SS7 Initial Address Message ("IAM") in accordance with applicable industry standard technical references.

3. OPERATIONAL SUPPORT SYSTEM (OSS) RATES

3.1 The terms and conditions for OSS are as set forth in Attachment 6.

ATTACHMENT 6

ACCESS TO OPERATIONS SUPPORT SYSTEMS (OSS)

TABLE OF CONTENTS

1. **General Conditions**……3

2. **Pre-ordering**……5

3. **Ordering and Provisioning**……7

4. **Maintenance & Repair**……10

5. **Billing**……11

6. **Testing**……11

ACCESS TO OPERATIONS SUPPORT SYSTEMS (OSS)

1 General Conditions

1.1 This Attachment 6 sets forth the terms and conditions under which BellSouth will provide AT&T access to the following BellSouth Operations Support Systems ("OSS") functions. Access to these functions shall be via various interfaces and personnel and may be used by AT&T for pre-ordering, ordering, provisioning, maintenance and repair, and billing functions, which are supported by BellSouth databases, information, and personnel.

1.2 BellSouth shall provide to AT&T nondiscriminatory access to its OSS and the necessary information contained therein in order that AT&T can perform the functions of pre-ordering, ordering, provisioning, maintenance and repair, and billing. BellSouth shall provide such nondiscriminatory access through electronic and/or manual interfaces, the capabilities of which are described in this Attachment. BellSouth's current interfaces are listed on its interconnection website. Changes to such interfaces are subject to the Change Control Process (CCP) as provided in Section 1.6 of this attachment. It is the sole responsibility of AT&T to obtain the technical capability to access and utilize BellSouth's OSS. BellSouth shall provide to AT&T all relevant documentation (manuals, user guides, specifications, etc.) regarding business rules and other formatting information, as well as practices and procedures, necessary to ensure that local service requests ("LSRs") are efficiently processed. All documentation is accessible at BellSouth's interconnection website, and is incorporated herein by reference.

1.3 Further, BellSouth shall provide to AT&T any manual processes available to other CLECs for pre-ordering, ordering, provisioning, and billing functions via BellSouth's Local Service Center, and for repair and maintenance functions through BellSouth's Local Operations Center. AT&T shall use its best efforts to utilize BellSouth's electronic interfaces. However, should AT&T use manual processes, AT&T shall pay BellSouth the additional charges associated with these manual processes, as set forth in this Agreement. In the event that BellSouth's electronic interfaces are unavailable or unable to process electronic requests that normally have electronic ordering capability, and such occasion is due to system failures or internal program issues, and thereby causing AT&T to submit a manual request, AT&T shall be entitled to an electronic ordering charge as set forth in this Agreement.

1.4 BellSouth will provide AT&T with access to its OSS twenty-four (24) hours a day, seven (7) days a week, less reasonable periods required for regular maintenance and scheduled downtime. BellSouth will use its best efforts to perform maintenance and to schedule downtime during evening hours and on weekends, and will post its scheduled downtime on the BellSouth interconnection website. Any changes to BellSouth's downtime schedule, as listed on its interconnection website, shall be subject to the CCP as provided in Section 1.6 of this Attachment. At a minimum, BellSouth shall provide AT&T fifteen (15) calendar days advance notice of any scheduled maintenance.

1.5 The Parties will provide to each other a Single Point of Contact ("SPOC") to provide technical support for the OSS described herein. The Parties will provide to each other a toll-free nationwide telephone number (operational during the same hours as the Parties provide to their own end user customers) which will be answered by capable staff trained to answer questions and resolve problems in connection with the ordering and provisioning of BellSouth Services and Elements.

1.6 The Parties agree that the current Change Control Process ("CCP") will be used to manage the OSS as described below. AT&T and BellSouth agree to comply with the provisions of the current Change Control Process. The provisions of the documented CCP may be amended from time to time with concurrence from the CLEC participants as provided for in the CCP guidelines, and are incorporated herein by reference. Generally, the CCP will administer changes to existing electronic interfaces, the introduction of new electronic interfaces, the retirement of old electronic interfaces, associated manual process improvements, and associated testing and documentation relevant to all change management processes. The process will define a procedure for resolution of CCP disputes. Documentation of the CCP, as well as that of related information and processes, will be clearly organized and readily accessible to AT&T at BellSouth's interconnection website.

1.7 The service standards, measurements and performance incentives applicable to the interfaces are set forth in Attachment 9 of this Agreement, incorporated herein by this reference.

1.8 AT&T and BellSouth will utilize standard industry formats and data elements developed by the Alliance for Telecommunications Industry Solutions ("ATIS"), including without limitation to the Ordering and Billing Forum ("OBF") ("ATIS and its associated committees"). Where standard industry formats and data elements are not developed by ATIS and its associated committees, AT&T and BellSouth will use the Change Control Process to address the specific format or data element requirements. When an ATIS and its associated committees standard or format is subsequently adopted, the Parties will utilize the Change Control Process to determine whether to continue to utilize the non-ATIS and its associated committees standard or

format and when to implement the ATIS and its associated committees standard or format.

1.9 Subscription Functions. In cases where BellSouth performs subscription functions for an inter-exchange carrier [i.e., PIC, and LPIC changes via Customer Account Record Exchange ("CARE")], BellSouth will provide the affected inter-exchange carriers with the Operating Company Number ("OCN") of the local provider for the purpose of obtaining end user billing account and other end user information required under subscription requirements.

1.10 Training. For each OSS training class offered by BellSouth, AT&T shall receive, at no cost, one seat per class per year. Job aids for updates to such OSS training information are available to AT&T on the BellSouth website. Prior to live system usage, if required, AT&T will complete user education classes for BellSouth-provided interfaces that access the BellSouth network.

1.11 As prescribed by the Change Control Process, BellSouth will provide notification of all Type-1 OSS outages and degradation of service for all occurrences exceeding 20 minutes, and will provide regular updates via e-mail and the interconnection website. Further, BellSouth will use best efforts to provide, as soon as possible and practical, a Root Cause Analysis (RCA) following the resolution of each OSS outage.

2 Pre-Ordering

2.1 BellSouth shall provide to AT&T electronic access to its OSS and the information contained therein such that AT&T can perform the following pre-ordering functions: service address validation, telephone number selection, service and feature availability, due date information, dispatch and available installation appointments, PIC options for intraLATA and interLATA toll, loop qualification information and end user customer service record information. Specifications for access and use of BellSouth's electronic pre-ordering interfaces are set forth at BellSouth's interconnection website and are incorporated herein by reference. Any changes to these specifications will be clearly defined and communicated via the appropriate CCP and/or Carrier Notification process.

2.2 BellSouth shall provide AT&T with nondiscriminatory access to the loop qualification information that is available to BellSouth, so that AT&T can make an independent judgment about whether the loop is capable of supporting the advanced services equipment that AT&T intends to install. Loop qualification information is defined as information, such as the composition of the loop material, including but not limited to: fiber optics or copper; the existence, location and type of any electronic or other equipment on the loop, including but not limited to, digital loop carrier or other remote

concentration devices, feeder/distribution interfaces, bridge taps, load coils, pair-gain devices; the loop length, including the length and location of each type of transmission media; the wire gauge(s) of the loop; and the electrical parameters of the loop, which may determine the suitability of the loop for various technologies. BellSouth agrees to update this information on a daily basis or as changes are identified. Situations may occur where an AT&T order is delayed or rejected due to insufficient information in the BellSouth loop qualification system, where a usable loop is in fact found using a manual loop look-up request. In this situation, where AT&T has reasonably interpreted the information received from LFACS, and the delay or rejection occurred because of the insufficiency in LFACs, AT&T shall have the right to request expedited treatment for its loop request and will not be responsible for any expedite charge in this situation. BellSouth will use best efforts to prevent such charges from appearing on a bill, however, AT&T will not be required to pay for such a charge under this circumstance.

2.3 BellSouth and AT&T will provide access to customer service record information where the Parties have the appropriate authorization from the customer. AT&T represents and warrants that it has obtained any customer authorization or approval (written, verbal or electronic) required by Applicable Law in order to receive such information. AT&T shall receive and retain such information in conformance with the requirements of 47 USC 222 (and implementing FCC regulations thereunder). Neither Party shall be required to present prior written authorization from each customer to the other Party before being allowed access to customer record information. Each Party will issue the other a blanket letter of authorization that states that AT&T and BellSouth will obtain the customer's permission before accessing customer records. Each Party shall retain authorization from its end users. If BellSouth desires to request a Customer Service Record ("CSR") for an AT&T customer, BellSouth is required to complete a Customer Service Information Query ("CSIQ") form and send via facsimile to AT&T. AT&T will accept CSR requests from BellSouth as acting agent for the customer (BellSouth should retain Letter of Authorization ("LOA") on file). AT&T will provide the CSR and return via facsimile both the CSIQ form and the CSR within forty-eight (48) hours or two (2) business days, if the first of the two (2) days falls on a Friday or a holiday. The provisioning of local service for the territory served by BellSouth is handled by AT&T's work center located in Atlanta, Georgia. The work center's facsimile telephone number is (404) 329-2169. Voice inquires on the CSIQ should be directed to (404) 982-6611. BellSouth will honor AT&T's ability to allow other CLECs to view AT&T's CSRs utilizing BellSouth's interfaces.

3 Ordering and Provisioning

3.1 BellSouth will provide to AT&T electronic access to OSS for the purpose of exchanging order information, including order status and completion notification, for non-complex and certain complex resale requests, and for requests for certain network elements. Specifications for access and use of BellSouth's electronic ordering interfaces are set forth at BellSouth's interconnection website and are incorporated herein by reference. Any changes to these specifications will be clearly defined and communicated via the appropriate CCP and/or Carrier Notification process.

3.2 BellSouth will recognize AT&T as the customer of record for services ordered by AT&T pursuant to this Agreement and will send all notices, invoices and pertinent information directly to AT&T. Except as otherwise specifically provided in this Agreement, AT&T shall be the single and sole point of contact for all AT&T end users for all questions, inquiries or requests.

3.3 Each Party shall refer all questions regarding the other Party's services or products directly to the other Party at a telephone number specified by the other Party. Each Party shall ensure that all their representatives who receive inquiries regarding the other Party's services or products: (i) provide such numbers to callers who inquire about the other Party's services or products; and (ii) do not in any way disparage or discriminate against the other Party, or its products or services.

3.4 AT&T may submit, and BellSouth will accept, requests for Services and Elements on a single LSR per end user account.

3.5 Currently all telecommunications services for resale, unbundled network elements, and interconnection are requested via BellSouth's LSR. The exception to this is an industry-wide exception dealing with ordering interconnection local trunking, which is ordered on an Access Service Request ("ASR"). Ordering procedures for LSRs are as outlined in the ordering guide posted at BellSouth's interconnection website, and any changes to those procedures will be administered through the CCP. Any additions or changes to ordering procedures resulting from new Services and Elements shall be provided to AT&T through BellSouth's interconnection website and/or carrier notifications.

3.6 BellSouth shall provide all ordering and provisioning services to AT&T during the same business hours of operation that BellSouth provisions service to its affiliates or end users. Ordering and provisioning support required by AT&T outside of these hours will be considered outside of normal business hours and will be subject to overtime billing. BellSouth will support project management after hour provisioning dependent on system availability (which include planned maintenance or unplanned outages) and resource availability, which resources will be allocated on a nondiscriminatory basis. The BellSouth PM will be responsible for ensuring the BellSouth personnel, and support systems

or centers necessary are available at the time established for the after hour provisioning.

3.7 If AT&T requests that BellSouth perform provisioning services at times or on days outside of BellSouth's normal business hours, BellSouth shall provide AT&T a quote for such services consistent with the provisions set forth in Attachment 2 of this Agreement, incorporated herein by this reference.

3.8 To ensure the most efficient use of facilities and resources, orders placed in the hold or pending status by AT&T will be held for a maximum of thirty (30) days from the date the order is placed on hold. After such time, if AT&T wishes to reinstate an order, AT&T may be required to submit a new service order.

3.9 Upon request from AT&T, and consistent with the provisions set forth in Attachment 2 of this Agreement, incorporated herein by this reference, BellSouth will provide an intercept referral message for any order for Services and Elements which include any new AT&T telephone number.

3.10 BellSouth will provide AT&T with a Firm Order Confirmation ("FOC") in compliance with the provisions of Attachment 9 of this Agreement, incorporated herein by this reference. The FOC will provide AT&T with the BellSouth order number, the negotiated service due date, telephone/circuit numbers (as applicable to the service). Additional specific data may also be provided, if appropriate.

3.11 AT&T will specify on each order its Desired Due Date ("DDD") for completion of that particular order. BellSouth shall not complete the order prior to DDD unless early turn-up is needed for testing purposes. If the DDD cannot be met BellSouth will notify AT&T under conditions outlined in 3.15. BellSouth will make best efforts to meet the DDD for service requests.

3.12 If, during the provisioning visit to the AT&T end user premises, the AT&T end user requests additional work, BellSouth will contact AT&T for authorization to perform said work; will provide an estimate of time and materials required; will quote time and charges at the completion of the visit; and will notify AT&T if a subsequent visit is required.

3.13 Expedite and Escalation Procedures:

3.14 Requests for due dates that are earlier than the BellSouth offered date will be treated as an expedite request. In order to request an expedited due date, AT&T must request the expedite through the appropriate BellSouth service center on the appropriate service request form. The BellSouth service center will coordinate the request internally with the appropriate groups within BellSouth in order to establish the date BellSouth will target as the offered date. The BellSouth service center will advise AT&T of this date on the FOC. If the date on the FOC does not meet AT&T's expedited request, AT&T may

escalate to the appropriate center. BellSouth may bill expedite charges for expedited due date pursuant to the charges in Exhibit A of Attachment 2 and will advise AT&T of any charges at the time the offered date is provided. BellSouth will provide an escalation list to AT&T containing the names and numbers of the appropriate personnel escalations are to be referred.

3.15 When AT&T orders Services and Elements electronically pursuant to this Agreement, BellSouth shall provide all responses, notifications and other communications electronically. Except for completion notifications, when AT&T orders Services and Elements manually pursuant to this Agreement, BellSouth shall provide all responses, notifications and other communications in the same manner in which it was submitted. These notifications will also be available through BellSouth's interconnection website. Such notice will be made as set forth in Attachment 9 as soon as the status change is identified. These notifications, responses, and other communications include, but are not limited to Firm Order Confirmations, Due Date jeopardies, Rejections/Clarifications/Errors in any of the data element(s) fields, Completion Notices, and Billing Completion Notices.

3.16 BellSouth and AT&T will perform co-operative testing (including trouble shooting to isolate problems) to test any Services and Elements purchased by AT&T pursuant to this Agreement in order to identify any performance problems identified at turn-up of the Services and Elements.

3.17 Where BellSouth provides installation on behalf of AT&T, BellSouth shall advise the AT&T end user to notify AT&T immediately if the AT&T end user requests a service change, moves, or any other additional work at the time of installation.

3.18 Upon AT&T's request through a Suspend/Restore Order, BellSouth shall suspend or restore the functionality of any Services and Elements provided pursuant to this Agreement.

3.19 Unless otherwise ordered by AT&T, when AT&T orders Services and Elements pursuant to this Agreement, all pre-assigned trunk or telephone numbers currently associated with those Services and Elements shall be retained without loss of switched based features where such features exist. AT&T shall be responsible for ensuring that associated functions (e.g., entries to databases and 911/E911 capability) are properly ordered or retained on the service request.

3.20 <u>Operational Support Systems</u>

3.21 LSRs submitted by means of an electronic interface will incur an OSS electronic ordering charge. An individual LSR will be identified for billing purposes by its Purchase Order Number (PON). LSRs submitted by means

other than an interactive interface (mail, fax, courier, etc.) will incur a manual order charge.

3.22 Denial/Restoral OSS Charge

3.22.1 In the event AT&T provides a list of customers to be denied and restored, rather than an LSR, each location on the list will require a separate PON and therefore will be billed as one LSR per location.

3.23 Cancellation OSS Charge

3.23.1 AT&T will incur an OSS charge for an accepted LSR that is later canceled.

3.24 Supplements or clarifications to a previously billed LSR will not incur another OSS charge.

4 Maintenance and Repair

4.1 BellSouth shall provide to AT&T electronic access to its OSS for the purpose of performing maintenance functions for all Services and Elements provided pursuant to this Agreement in accordance with the terms and conditions of this Attachment 6 and as set forth in the Operational Understanding negotiated between BellSouth and AT&T Maintenance Centers ("Operational Understanding"). BellSouth will not make changes to the Operational Understanding negotiated between BellSouth and AT&T without AT&T's agreement. Specifications for access and use of BellSouth's maintenance and repair interfaces are set forth at BellSouth's interconnection website and are incorporated herein by reference.

4.2 BellSouth service technicians shall provide to AT&T end users repair service that is at least equal in quality to that provided to BellSouth end users and trouble calls from AT&T shall receive response time priority that is at least equal to that of BellSouth end users and shall be handled on a "first come first served" basis regardless of whether the end user is an AT&T end user or a BellSouth end user.

4.3 For services provided through resale, BellSouth agrees to provide AT&T with scheduled maintenance for residence and small business end users consistent with the Operational Understanding. BellSouth agrees to provide AT&T written notification of Central Office conversions and such conversions consistent with the Operational Understanding.

.

4.4 Maintenance charges for premises work beyond the NID by BellSouth technicians, shall be billed by AT&T to its end user, and not by BellSouth. The BellSouth technician shall, (i) contact AT&T for authorization, (ii) provide AT&T an estimate of time and materials required, (iii) explain to the end user additional work performed, upon completion of such requested work, and, (iv) notify AT&T if a subsequent visit is required. BellSouth will bill maintenance charges for premises visits to AT&T.

4.5 When maintenance charges are incurred during premises visits, the BellSouth technician shall present the end user with a warranty sheet for the work performed and the materials used. In the event that an additional appointment is required, the BellSouth technician will notify AT&T immediately.

4.6 BellSouth shall use best efforts to provide AT&T with prior notification, in the event that a BellSouth repair person is unable to keep a scheduled repair visit. If prior notice is not given and a scheduled repair visit is missed, AT&T may escalate to BellSouth for expedited repair or a revised estimated completion time.

5 Billing

5.1 BellSouth shall provide to AT&T nondiscriminatory access to billing OSS in compliance with the provisions in Attachment 7 – Billing.

6 Testing

6.1 BellSouth shall administer all OSS testing in accordance with published testing processes as set forth in the CCP document and the CLEC Pre-Ordering/Ordering Interface Testing Practices and Procedures. Both documents are accessible at BellSouth's interconnection website, and any changes to those procedures will be administered through the CCP.

6.2 When the BellSouth testing environment is available, BellSouth will support regression testing to assure systems integrity.

ATTACHMENT 7

CONNECTIVITY BILLING AND RECORDING

ATTACHMENT 7

CONNECTIVITY BILLING AND RECORDING

TABLE OF CONTENTS

1.1 GENERAL 3
1.2 BILLABLE INFORMATION AND CHARGES 5
1.3 MEET POINT BILLING 7
1.4 RIGHT-OF-WAY 8
1.5 LOCAL NUMBER PORTABILITY 8
1.6 ISSUANCE OF BILLS - GENERAL 9
1.7 ELECTRONIC TRANSMISSIONS 10
1.8 TAPE OR PAPER TRANSMISSIONS 11
1.9 TESTING REQUIREMENTS 12
1.10 ADDITIONAL REQUIREMENTS 13
1.11 PAYMENT OF CHARGES 13
1.12 BILLING DISPUTES 14
1.13 LATE PAYMENT CHARGES 15
1.14 DISCONTINUANCE OF SERVICE 16
1.15 ADJUSTMENTS 17
1.16 REVENUE PROTECTION 23
2. LOCAL ACCOUNT MAINTENANCE 18

CONNECTIVITY BILLING AND RECORDING

1.1 General

1.1.1 This Section describes the requirements for BellSouth to bill and record all charges AT&T incurs for purchasing: (a) telecommunications services that BellSouth currently provides, or may offer hereafter for resale; (b) interconnection of BellSouth's network to AT&T's network; (c) certain unbundled Network Elements and certain combinations of such unbundled Network Elements (Network Elements and Combinations) (resale, interconnection, Network Elements and Combinations shall collectively be referred to as "Billed Services"); and to provide Meet Point Billing and Mutual Compensation.

1.1.2 After receiving certification as a local exchange company from the appropriate regulatory agency, AT&T will provide the appropriate BellSouth service center the necessary documentation in order for BellSouth to establish service for AT&T.

1.1.3 Notices. Notwithstanding anything to the contrary in this Agreement, all bills and notices regarding billing matters, including notices relating to security deposits, disconnection of services for nonpayment of charges, and rejection of additional orders from AT&T, shall be forwarded to the individual and/or addresses provided by AT&T in establishment of its billing account(s) with BellSouth, or to the individual and/or addresses subsequently provided by AT&T as the contact for billing information. AT&T may not request more than one address per billing account number. All monthly bills and notices described in this Section shall be forwarded to the same individual and/or address; provided, however, upon written request from AT&T to BellSouth's billing organization, the notice of discontinuance of services purchased by AT&T under this Agreement provided for in Section 1.15 of this Attachment shall be sent via certified mail to the individual(s) listed in the Notices provision of the General Terms and Conditions of this Agreement.

1.1.4 After submitting a credit profile and deposit, if required, and after receiving certification as a local exchange carrier from the appropriate regulatory agency, AT&T will provide the appropriate BellSouth advisory team/local contract manager the necessary documentation to enable BellSouth to establish accounts for Local Interconnection, Network Elements and Other Services, Collocation and/or resold services. Such documentation shall include the Application for Master Account, if applicable, proof of authority to provide telecommunications services, the appropriate Operating Company Numbers (OCN) for each state as assigned by the National Exchange Carriers Association (NECA), Carrier Identification Code (CIC), Access Customer

Name and Abbreviation (ACNA), Blanket Letter of Authorization (LOA), Misdirected Number form, and a tax exemption certificate, if applicable. Notwithstanding anything to the contrary in this Agreement, AT&T may not order services under a new Q account established in accordance with this Section 1.1.4 until 30 days after all information specified in this Section is received from AT&T.

1.1.5 OCN. If AT&T needs to change its Company Code(s) under which it operates when AT&T has already been conducting business utilizing those Company Code(s), AT&T will submit such a request through the BFR/NBR request.

1.1.6 Payment of all charges will be the responsibility of AT&T. AT&T shall make payment to BellSouth on or before the next bill date in immediately available funds for all services billed except as otherwise provided in this Attachment. Payment is considered to have been made when received by BellSouth. BellSouth is not responsible for payments not received by AT&T from AT&T's end user. BellSouth will not become involved in billing disputes that may arise between AT&T and it end user. Payments made to BellSouth, as payment on account will be credited to an accounts receivable master account and not to an end user's account.

1.1.7 Upon proof of tax exempt certification from AT&T, the total amount billed to AT&T will not include any taxes due from the end user to reflect the tax exempt certification and local tax laws. AT&T will be solely responsible for the computation, tracking, reporting, and payment of taxes applicable to AT&T's end user.

1.1.8 BellSouth will not perform billing and collection services for AT&T as a result of the execution of this Agreement. All requests for billing services should be referred to the appropriate entity or operational group within BellSouth.

1.1.9 <u>Deposit Policy</u> AT&T shall complete the BellSouth Credit Profile and provide information to BellSouth regarding credit worthiness, unless satisfactory credit has already been established. Based on the results of any BellSouth credit analysis, BellSouth reserves the right to secure the account with a suitable form of security deposit. Such security deposit shall take the form of cash, an Irrevocable Letter of Credit (BellSouth form), Surety Bond (BellSouth form) or, in BellSouth's sole discretion, some other form of security proposed by AT&T. Any such security deposit shall in no way release AT&T from its obligation to make complete and timely payments of its bill. AT&T shall pay any applicable deposits prior to the inauguration of service. To the extent not required as of the effective date of this agreement, AT&T shall not be required to furnish a security deposit or letter of credit to

BellSouth absent an adverse material change in financial circumstances would so warrant and/or gross monthly billing has increased substantially beyond the level initially used to determine the level of security deposit, BellSouth reserves the right to request additional security and/or file a Uniform Commercial Code (UCC-1) security interest in AT&T's "accounts receivables and proceeds." Interest on a security deposit, if provided in cash, shall accrue and be paid in accordance with the terms in the appropriate BellSouth tariff. Security deposits collected under this Section shall not exceed two months' estimated billing. In the event AT&T fails to remit to BellSouth any deposit requested pursuant to this Section, service to AT&T may be terminated in accordance with the terms of Section 1.15.2 of this Attachment, and any security deposits will be applied to AT&T's account(s). In the event AT&T defaults on its account, service to AT&T will be terminated in accordance with the terms of Section 1.15.2 and any security deposits will be applied to AT&T's account.

1.2 Billable Information and Charges

1.2.1 BellSouth will bill and record in accordance with this Agreement those charges AT&T incurs as a result of AT&T's purchasing Billed Services from BellSouth. BellSouth will bill charges through the Carrier Access Billing System (CABS), Integrated Billing System (IBS) and/or the Customer Records Information System (CRIS) depending on the particular service(s) provided. BellSouth will format all bills in CABS Billing Output Specifications (CBOS) Standard or CRIS/CLUB format, depending on the type of service ordered, and will include sufficient bill detail to identify the particular services ordered. For those Billed Services where standards have not yet been developed, BellSouth's billing format will change, as necessary, when standards are finalized by the industry forum.

1.2.2 BellSouth shall provide AT&T a monthly bill that includes all charges incurred by and credits and/or adjustments due to AT&T for those Billed Services ordered, established, utilized, discontinued or performed pursuant to this Agreement. Each bill provided by BellSouth to AT&T shall include: (1) all non-usage sensitive charges incurred for the period beginning with the day after the current bill date and extending to, and including, the next bill date; (2) any known unbilled non-usage sensitive charges for prior periods; (3) unbilled usage sensitive charges for the period beginning with the last bill date and extending through the current bill date, except for detail usage for resold services which could extend beyond the current bill date, which are: per use vertical services, directory services, operator charges, IntraLATA toll and optional calling plans, excluding Watsaver® Service; (4) any known unbilled usage sensitive charges for prior periods; and (5) any known unbilled

adjustments. Each bill shall set forth the quantity and description of each such Billed Services billed to AT&T. All charges billed to AT&T must indicate the state from which such charges were incurred except in cross boundary state situations.

1.2.3 The Bill Date, as defined herein, must be present on each bill transmitted by BellSouth to AT&T and must be a valid calendar date. Bills should not be rendered for any charges which are incurred under this agreement on or before one (1) year proceeding the bill date. However, both Parties recognize that situations exist which would necessitate billing beyond the one (1) year limit, as permitted by law. These exceptions are:

1.2.3.1 Charges connected with jointly provided services whereby meet point billing guidelines require either party to rely on records provided by a third party;

1.2.3.2 Charges incorrectly billed due to error in or omission of customer provided data such as PIU and PLU factors, or other ordering data

1.2.3.3 Both Parties agree that these limits will be superceded by a Bill Accuracy Certification Agreement which might be negotiated between the Parties.

1.2.4 Charges for Billed Services shall be in conversation seconds for those services that are billed based on conversation time. For resold services, charges will be billed in accordance with retail billing standards. For other than resold services, the total seconds per chargeable rate element per end office will be totaled and rounded to the nearest whole minute. Self reporting factors such as PLU and PIU will be used to determine jurisdiction of unidentifiable traffic.

1.2.5 Billing Account Numbers ("BANS") will be established in accordance with BellSouth billing policy and OBF standards. The BellSouth billing policy in effect at the time this Agreement is signed will govern the billing account structure during the term of this Agreement. BellSouth will provide such policy to AT&T at such time. Changes to the BellSouth billing policy will be coordinated with AT&T and the AT&T Account Team to ensure that AT&T will not be adversely impacted by such changes. AT&T may request that certain categories of charges be included in separate bills, which are to be sent to different billing addresses. AT&T will submit such request through the Bona Fide Request/New Business Request ("BFR/NBR") process set forth in Attachment 10 of this Agreement, incorporated herein by this reference.

1.2.6 Each Party shall provide the other Party, at no additional charge, a contact person for the handling of any billing questions or problems that may arise during the implementation and performance of the terms and conditions of

this Attachment 7. Billing questions subsequent to implementation will be directed to the appropriate BellSouth billing specialist.

1.3 Meet Point Billing

1.3.1 Where appropriate, AT&T and BellSouth will establish meet-point billing ("MPB") arrangements in accordance with the Meet-Point Billing guidelines adopted by and contained in the OBF's MECAB and MECOD documents, except as modified herein. Both Parties will individually and collectively maintain provisions in their respective federal and state access tariffs, and/or provisions within the National Exchange Carrier Association ("NECA") Tariff No. 4, or any successor tariff to reflect the MPB arrangements identified in this Agreement, in MECAB and in MECOD.

1.3.2 AT&T and BellSouth will implement the "Multiple Bill/Multiple Tariff" option in order to bill any interexchange carrier ("IXC") for that portion of the jointly provided switched exchange access service provided by AT&T or BellSouth.

1.3.3 BellSouth shall provide to AT&T the billing name, billing address, and carrier identification code ("CIC") of the IXCs that may utilize any portion of AT&T's network in an AT&T/BellSouth MPB arrangement in order to comply with the MPB Notification process as outlined in the MECAB document. Such information shall be provided to AT&T in the format and via the medium to which the Parties agree. In the event that the end office company is unable to ascertain the IXC to be billed, BellSouth will work with the end office company to identify the proper entity to be billed.

1.3.4 BellSouth and AT&T agree that in an MPB arrangement where one Party provides local transport and the other Party provides the end office switching, the Party who provides the end office switching is entitled to bill any residual interconnection charges ("RIC") and common carrier line ("CCL") charges associated with the traffic. The Parties further agree that in those MPB situations where one Party sub-tends the other Party's access tandem, the Party providing the access tandem is only entitled to bill the access tandem fee and any associated local transport charges. The Parties also agree that the Party who provides the end office switching is entitled to bill end office switching fees, local transport charges, RIC and CCL charges, as appropriate, and such other applicable charges. BellSouth and AT&T agree that in a MPB arrangement, where transport is jointly provided, and/or the tandem is owned by one Party and the end office is owned by the other Party, charges will be billed using tariff rates and in accordance to MECAB guidelines.

1.3.5 BellSouth and AT&T will record and transmit switched exchange access service records in accordance with the MECAB standards. Such data shall be transmitted to the other Party within ten (10) days of its recording.

1.3.6 If MPB data is not submitted within ten (10) days of their recording or is not in the proper format as set forth in this Agreement, and if as a result the other Party is delayed in billing the IXC for the appropriate charges it incurs, the delaying Party shall pay the other Party a late MPB data delivery charge which will be the total amount of the delayed charges times the highest interest rate (in decimal value) which may be levied by law for commercial transactions, compounded daily for the number of days from the date the MPB charges should have been received to and including the date the MPB charge information is actually received.

1.3.7 Errors in MPB data exchanged by the Parties may be discovered by AT&T, BellSouth or the billable IXC. Both AT&T and BellSouth agree to provide the other Party with notification of any discovered errors within two (2) business days of the discovery. The other Party shall correct the error within eight (8) business days of notification and resubmit the data. In the event the errors cannot be corrected within the time period specified above, the erroneous data shall be considered lost. If MPB data is lost due to uncorrectable errors or otherwise, the Parties shall follow the procedures set forth in Section 1.12 of this Attachment 7.

1.3.8 Both Parties will provide the other a single point of contact to handle any MPB questions.

1.3.9 MPB will apply for all traffic bearing the 500, 700, 900, 8YY or any other non-geographic NPA which may be likewise designated for such traffic in the future.

1.4 Right-of-Way

1.4.1 Billing for right-of-way, poles and conduits will be addressed in Attachment 8 of this Agreement, incorporated herein by this reference.

1.5 Local Number Portability

1.5.1 When an IXC terminates an interLATA or intraLATA toll call to an AT&T local exchange customer whose telephone number has been ported from BellSouth, the Parties agree that AT&T shall receive those IXC access charges associated with end office switching, local transport, RIC and CCL, as appropriate. BellSouth shall receive any access tandem fees, dedicated and common transport charges, to the extent provided by BellSouth, and any Service Provider Number Portability ("SPNP") fees (i.e., such as RCF

charges) set forth in this Agreement. When a call for which access charges are not applicable is terminated to an AT&T local exchange customer whose telephone number has been ported from BellSouth, and is terminated on AT&T's own switch, the Parties agree that the mutual compensation arrangements described in this Agreement shall apply.

1.6 Issuance of Bills - General

1.6.1 BellSouth and AT&T will issue all bills in accordance with the terms and conditions set forth in this Section. BellSouth and AT&T will establish monthly billing dates ("Bill Date") for each Billing Account Number ("BAN"). Each BAN shall remain constant from month to month, unless changed as agreed to by the Parties. Each Party shall provide the other Party at least thirty (30) calendar days written notice prior to changing, adding or deleting a BAN. The Parties will provide one billing invoice associated with each BAN. Each invoice must contain an invoice number (which will vary from month to month). The bill date is the only varying invoice number available on the Resale bill. On each bill associated with a BAN, the appropriate invoice number and the charges contained on such invoice must be reflected. All bills must be received by the other Party no later than ten (10) calendar days from Bill Date and at least twenty (20) calendar days prior to the payment due date, whichever is earlier. Any bill received on a Saturday, Sunday or New Year's Day, Martin Luther King, Jr.'s Birthday, Washington's Birthday, Memorial Day, Independence Day, Labor Day, Columbus Day, Veteran's Day, Thanksgiving Day, and Christmas Day will be deemed received the next business day. If either Party fails to receive billing data and information within the time period specified above, the payment due date will be extended by the number of days the bill is late.

1.6.2 BellSouth and AT&T shall issue all CABS bills or bills in CBOS format containing such billing data and information in accordance with the most current version of CBOS, or if development time is required, within two (2) versions of the current CBOS standard. To the extent that there are no CBOS or MECAB standards governing the formatting of certain data, such data shall be issued in the format as mutually agreed upon by the Parties.

1.6.3 Within thirty (30) days of finalizing the chosen billing media, each Party will provide the other Party written notice of which bills are to be deemed the official bills to assist the Parties in resolving any conflicts that may arise between the official bills and other bills received via a different media which purportedly contain the same charges as are on the official bill. If either Party requests an additional copy (ies) of a bill, such Party shall pay the other Party a reasonable fee per additional bill copy, unless such copy was requested due

to errors, omissions, or corrections or the failure of the transmission to comply with the specifications set forth in this Agreement.

1.6.4 When sending bills via electronic transmission, to avoid transmission failures or the receipt of billing information that cannot be processed, the Parties shall provide each other with their respective process specifications. Each Party shall comply with the mutually acceptable billing processing specifications of the other. AT&T and BellSouth shall provide each other reasonable notice if a billing transmission is received that does not meet such Party's specifications or that such Party cannot process. Such transmission shall be corrected and resubmitted to the other Party, at the resubmitting Party's sole expense, in a form that can be processed. The payment due date for such resubmitted transmissions will be twenty (20) days from the date that the transmission is received in a form that can be processed and that meets the specifications set forth in this Attachment 7.

1.7 Electronic Transmissions

1.7.1 BellSouth and AT&T agree that each Party will transmit billing information and data in the appropriate CBOS format electronically via CONNECT:Direct to the other Party at the location specified by such Party. The Parties agree that a T1.5 or 56kb circuit to Gateway for CONNECT:Direct is required. AT&T data centers will be responsible for originating the calls for data transmission via switched 56kb or T1.5 lines. If BellSouth has an established CONNECT:Direct link with AT&T, that link can be used for data transmission if the location and applications are the same for the existing link. Otherwise, a new link for data transmission must be established. BellSouth must provide AT&T/Alpharetta its CONNECT:Direct Node ID and corresponding VTAM APPL ID before the first transmission of data via CONNECT:Direct. AT&T's CONNECT:Direct Node ID is "NDMATTA4" and VTAM APPL ID is "NDMATTA4" and must be included in BellSouth's CONNECT:Direct software. AT&T will supply to BellSouth its RACF ID and password before the first transmission of data via CONNECT:Direct. Any changes to either Party's existing CONNECT:Direct Node ID must be sent to the other Party no later than sixty (60) calendar days before the changes take effect; provided however that BellSouth may request an extension of that time and AT&T cannot unreasonably withhold its consent with such an extension.

1.7.2 The following dataset format shall be used as applicable for those charges transmitted via CONNECT:Direct in CBOS format:

Production Dataset

AF25.AXXXXYYY.AZZZ.DDDEE	Production Dataset Name

AF25 =	Job Naming Convention
AXXXX =	Numeric Company Code
YYY =	LEC Remote
AZZZ =	RAO (Revenue Accounting Office)
DDD =	BDT (Billing Data Tape with or without CSR), MEGA, JBILL, TCGXX (XX=Bill Period), or CSR (Customer Service Record)
EE =	01 thru 31 (Bill Period) (optional) or GA (US Postal-State Code)

Test Dataset

AF25.ATEST.AXXXX.DDD	Test Dataset Name
AF25.ATEST =	Job Naming Convention
AXXXX =	Numeric Company Code
DDD =	BDT (Billing Data Tape with or without CSR) or CSR (Customer Service Record)

1.8 Tape or Paper Transmissions

1.8.1 In the event either Party does not temporarily have the ability to send or receive data via CONNECT:Direct, that Party will transmit billing information to the other party via magnetic tape or paper, as agreed to by AT&T and BellSouth. Billing information and data contained on magnetic tapes or paper for payment shall be sent to the Parties at locations provided by the customer. The Parties acknowledge that all tapes transmitted to the other Party via U.S. Mail or Overnight Delivery and which contain billing data will not be returned to the sending Party.

1.8.2 Each Party will adhere to the tape packaging requirements set forth in this subsection. Where magnetic tape shipping containers are transported in freight compartments, adequate magnetic field protection shall be provided, by keeping a typical 6-inch distance from any magnetic field generating device (except a magnetron-tape device). The Parties agree that they will only use those shipping containers that contain internal insulation to prevent damage. Each Party will clearly mark on the outside of each shipping container its

name, contact and return address. Each Party further agrees that it will not ship any billing tapes in tape canisters.

1.8.3 All billing data transmitted via tape must be provided on a cartridge (cassette) tape and must be of high quality, conform to the Parties' record and label standards 18 or 36 track, odd parity, group coded recording mode and extended binary-coded decimal interchange code ("EBCDIC"). Each reel of tape must be 100% tested at 20% or better "clipping" level with full width certification and permanent error free at final inspection. AT&T reserves the right to destroy a tape that has been determined to have unrecoverable errors. AT&T also reserves the right to replace a tape with one of equal or better quality.

1.8.4 Billing data tapes shall follow CBOS standards.

1.8.5 A single alphanumeric serial number must appear on the external (flat) surface of the tape for visual identification. This number shall also appear in the "dataset serial number field" of the first header record of the IBM standard tape label. The external and internal label shall be the same. The dataset name shall appear on the flat side of the reel and also in the "data set name field" on the first header record of the IBM standard tape label. BellSouth's name shall appear on the flat side of the cartridge.

1.8.6 Tape labels shall conform to IBM OS/VS Operating System Standards contained in the IBM Standard Labels Manual (GC26-3795-3). IBM standard labels are 80-character records recorded in EBCDIC, odd parity. The first four characters identify the labels:

1.9 Testing Requirements

1.9.1 If requested by AT&T, at least thirty (30) calendar days prior to any BellSouth software releases that affect the mechanized bill format, BellSouth shall send to AT&T bill data in the appropriate mechanized format for testing to ensure that the bills can be processed and that the bills comply with CBOS standards. After receipt of the test data from BellSouth, AT&T will notify BellSouth at least ten (10) days prior to the software release implementation date of any processing problems as a result of the software changes. If the transmission fails to meet CBOS standards, BellSouth shall make the necessary corrections prior to implementation to meet such CBOS standards.

1.9.2 BellSouth shall provide to AT&T's AC&R Access Bill Coordinator, at an agreed upon address, BellSouth's originating or state level company code so that it may be added to AT&T's internal tables at least thirty (30) calendar

days prior to testing or prior to a change in BellSouth's originating or state level company code.

1.9.3 If requested by AT&T, test tapes containing the transmitted AT&T billing data and information will be sent during the testing period, per request, to the following location:

Test Tapes:	AT&T Attention: AC&R Access Bill Coordinator 600 North Point Parkway FLOC B1104B Alpharetta, Georgia 30302

1.10 Additional Requirements

1.10.1 BellSouth agrees that if it transmits data to AT&T in a mechanized format, BellSouth will also comply with the following specifications which are not contained in CBOS guidelines but which are necessary for AT&T to process billing information and data:

1.10.1.1 The BAN shall not contain embedded spaces or low values.

1.10.1.2 The Bill Date shall not contain spaces or non-numeric values.

1.10.1.3 Each bill must contain at least one detail record.

1.10.1.4 Any "From" Date should be less than the associated "Thru" Date and neither date can contain spaces.

1.10.1.5 The Invoice Number must not have embedded spaces or low values.

1.11 Payment Of Charges

1.11.1 Subject to the terms of this Agreement, AT&T and BellSouth will pay each other within thirty (30) calendar days from the Bill Date, or twenty (20) calendar days from receipt of the bill, whichever is later. Any bill received on a Saturday, Sunday or New Year's Day, Martin Luther King, Jr.'s Birthday, Washington's Birthday, Memorial Day, Independence Day, Labor Day, Columbus Day, Veteran's Day, Thanksgiving Day, and Christmas Day will be deemed received the next business day. If the payment due date is a Sunday or is a Monday that has been designated a holiday for New Year's Day, Martin Luther King, Jr.'s Birthday, Washington's Birthday, Memorial Day, Independence Day, Labor Day, Columbus Day, Veteran's Day, Thanksgiving Day, and Christmas Day, payment will be made the next business day. If the

payment due date is a Saturday or is on a Tuesday, Wednesday, Thursday or Friday that has been designated a holiday for New Year's Day, Martin Luther King, Jr.'s Birthday, Washington's Birthday, Memorial Day, Independence Day, Labor Day, Columbus Day, Veteran's Day, Thanksgiving Day, and Christmas Day, payment will be made on the preceding business day.

1.11.2 Payments shall be made in U.S. Dollars via electronic funds transfer ("EFT") to the other Party's bank account. At least thirty (30) days prior to the first transmission of billing data and information for payment, BellSouth and AT&T shall provide each other the name and address of its bank, its account and routing number and to whom billing payments should be made payable. If such banking information changes, each Party shall provide the other Party at least sixty (60) days written notice of the change and such notice shall include the new banking information. The Parties will render payment via EFT. AT&T will provide BellSouth with one address to which such payments shall be rendered and BellSouth will provide AT&T with one address to which such payments shall be rendered. In the event AT&T receives multiple bills from BellSouth which are payable on the same date, AT&T may remit one payment for the sum of all bills payable to BellSouth's bank account specified in this subsection if AT&T provides payment advice to BellSouth. Each Party shall provide the other Party with a contact person for the handling of billing payment questions or problems.

1.12 Billing Disputes

1.12.1 Each party agrees to provide written notice to the Billing Party of the amount it disputes (Disputed Amount) and include in such written notice the total estimated amount disputed and the specific details and reason for disputing each item including, without limitation, and as applicable, the date of the bill in question, BAN/Invoice number of the bill, and the level of detail required to communicate the extent of dispute, which may include the telephone number, if necessary, customer code, circuit ID number or trunk number, and the USOC information questioned. AT&T shall report all billing disputes to BellSouth using the Billing Adjustment Request Form (RF1461) provided by BellSouth. Except as provided above, required fields on the BAR form, are the BAN and ETN fields. Other fields may be utilized at AT&T's discretion. In the event of a billing dispute, the Parties will endeavor to resolve the dispute within sixty (60) calendar days of the dispute notification date. If the Parties are unable to reach resolution within the 60 day period, then the aggrieved Party may pursue dispute resolution in accordance with the General Terms and Conditions of this Agreement.

1.12.2 For purposes of this Section 1.12, a billing dispute means a reported dispute of a specific amount of money actually billed by either Party. The dispute must

be clearly explained by the disputing Party and supported by written documentation as described in Section 1.12.1. By way of example and not by limitation, a billing dispute will not include the refusal to pay all or part of a bill or bills when no written documentation is provided to support the dispute, nor shall a billing dispute include the refusal to pay other amounts owed by the billed Party until the dispute is resolved. Claims by the billed Party for damages of any kind will not be considered a billing dispute for purposes of this Section. If the billing dispute is resolved in favor of the billing Party, the disputing Party will make immediate payment of any of the disputed amount owed to the billing Party or the billing Party shall have the right to pursue normal treatment procedures. Any credits due to the disputing Party, pursuant to the billing dispute, will be applied to the disputing Party's account by the billing Party immediately upon resolution of the dispute.

1.12.3 If a party disputes a charge and does not pay such charge by the payment due date, such charges shall be subject to late payment charges as set forth in Section 1.13 of this Attachment 7. If a party disputes charges and the dispute is resolved in favor of such party, the other party shall credit the bill of the disputing party for the amount of the disputed charges along with any late payment charges assessed immediately after the resolution of the dispute. Accordingly, if a party disputes charges and the dispute is resolved in favor of the other party, the disputing party shall pay the other party the amount of the disputed charges and any associated late payment charges assessed immediately after the resolution of the dispute.

1.13 Late Payment Charges

1.13.1 Late Payment Charges. If either Party fails to remit payment for any charges described in this Attachment 7 by the payment due date, or if a payment or any portion of a payment is received by either Party after the payment due date, or if a payment or any portion of a payment is received in funds which are not immediately available to the other Party, then a late payment penalty shall be assessed. For bills rendered by BellSouth for payment by AT&T, the late payment charge shall be calculated based on the portion of the payment not received by the payment due date times the late factor as set forth in the following BellSouth tariffs, based upon the service for which payment was not received: for general subscriber services, Section A2 of the General Subscriber Services Tariff; for private line service, Section B2 of the Private Line Service Tariff; and for access service, Section E2 of the Access Service Tariff. For bills rendered by AT&T for payment by BellSouth the late payment charge shall be calculated based on the portion of the payment not received by the payment date times the lesser of (i) one and one-half percent (1½ %) per month or (ii) the highest interest rate (in decimal value) which may be charged by law for commercial transactions, compounded daily for the

number of days from the payment date to and including the date that payment is actually made. In no event, however, shall interest be assessed by AT&T on any previously assessed late payment charges. BellSouth shall only assess interest on previously assessed late payment charges in a state where it has the authority pursuant to its tariffs. Bill disputes shall not be submitted by either party for any charge on or after one (1) year following the bill date of the bill on which the charge first appears.

1.14 Discontinuance of Service

1.14.1 The procedures for discontinuing service to an end user are as follows:

1.14.1.1 Where possible, BellSouth will deny service to AT&T's end user on behalf of, and at the request of, AT&T. Upon restoration of the end user's service, restoral charges will apply and will be the responsibility of AT&T.

1.14.1.2 At the request of AT&T, BellSouth will disconnect an AT&T end user.

1.14.1.3 All requests by AT&T for denial or disconnection of an end user for nonpayment must be in writing.

1.14.1.4 AT&T will be made solely responsible for notifying the end user of the proposed disconnection of the service.

1.14.1.5 BellSouth may disconnect and reuse facilities when the facility is in a denied state and BellSouth has received an order to establish new service or transfer of service from an end user or an end user’s CLEC at the same address served by the denied facility.

1.14.2 The procedures for discontinuing service by either AT&T or BellSouth are as follows:

1.14.2.1 The Parties reserve the right to suspend or terminate service for nonpayment of undisputed amounts or in the event of prohibited, unlawful or improper use of the each party’s facilities or services, or abuse of the other party’s facilities.

1.14.2.2 The Parties reserve the right to suspend or terminate service for nonpayment. If payment of amounts not subject to a billing dispute, as described in Section 1.12, is not received by the bill date in the month after the original bill date, either party may provide written notice to the other party that additional applications for service may be refused, that any pending orders for service may not be completed, and/or that access to ordering systems may be suspended if payment of such amounts and all amounts billed in accordance with this Attachment that are not in dispute, is not received by the fifteenth day following the date of the notice. In addition either party may, at the same

time, provide written notice to the person designated by either party to receive notices of noncompliance that either party may discontinue the provision of existing services to the other party if payment of such amounts such amounts and all amounts billed in accordance with this Attachment that are not in dispute, is not received by the thirtieth day following the date of the initial notice.

1.14.2.3 In the case of such discontinuance, all billed undisputed charges, as well as applicable termination charges, shall become due.

1.14.2.4 If either party does not discontinue the provision of the services involved on the date specified in the thirty (30) days' notice and the other party's noncompliance continues, nothing contained herein shall preclude the noticing party's right to discontinue the provision of the services to the other party without further notice.

1.14.2.5 Upon discontinuance of service on a party's account, service to such party's end users will be denied. The denying party will reestablish service for the denied party upon payment of all past due undisputed charges and the appropriate connection fee, subject to the denying party's normal application procedures. The denied party is solely responsible for notifying the end user of the proposed disconnection of the service. If within fifteen (15) days after a party's service has been denied and no arrangements to reestablish service have been made consistent with this subsection, such party's service will be discontinued.

1.15 Adjustments

1.15.1 Subject to the terms of this Attachment 7, BellSouth will adjust incorrect billing charges to AT&T. Such adjustments shall be set forth in the appropriate section of the bill pursuant to CBOS or CLUB/EDI standards.

1.16 Revenue Protection

1.16.1 Where BellSouth services are being resold AT&T will have the use of all present and future fraud prevention or revenue protection features, including prevention, detection, or control functionality embedded within any of the network elements available to BellSouth. These features include, but are not limited to, screening codes, call blocking of international, 800, 900, and 976 numbers.

1.16.2 The Party causing a provisioning, maintenance or signal network routing error that results in uncollectible or unbillable revenues to the other Party shall be

liable for the amount of the revenues lost by the Party unable to bill or collect the revenues less costs that would have been incurred from gaining such revenues.

1.16.3 Uncollectible or unbillable revenues resulting from the accidental or malicious alteration of software underlying Network Elements or their subtending operational support systems by unauthorized third parties shall be the responsibility of the Party having administrative control of access to said Network Element or operational support system software to the extent such unbillable or uncollectible revenue results from the gross negligence or willful act or omission of the Party having such administrative control.

1.167.4 BellSouth shall be responsible for any uncollectible or unbillable revenues resulting from the unauthorized physical attachment to loop facilities from the Main Distribution Frame up to and including the Network Interface Device, including clip-on fraud to the extent such unbillable or uncollectible revenue results from the gross negligence or willful act or omission of BellSouth. BellSouth shall provide soft dial tone to allow only the completion of calls to final termination points required by law.

2. LOCAL ACCOUNT MAINTENANCE

2.1 Where AT&T is reselling BellSouth's services BellSouth shall provide local account maintenance information and service as described herein.

2.2 When notified by a CLEC (or from the end user to change to BellSouth service) that an AT&T end user has switched its local service to the other CLEC's service (or to BellSouth), BellSouth shall send AT&T a loss notification message to inform AT&T that its end user has switched to another CLEC (or to BellSouth). The Parties agree to utilize LSOG4 or the most current industry ordering guideline standard established by the OBF that contains the loss notification message.

2.3 BellSouth shall send loss notification messages to AT&T six (6) days a week using the applicable release of EDI as the electronic medium for transmitting the loss notification message.

2.4 BellSouth shall accept and process intraLATA and interLATA PIC changes sent by AT&T. When an AT&T local end user switches its IXC, AT&T will enter the PIC change into the current local order system, and will generate an intraLATA or interLATA PIC Service Change Order that will be sent to BellSouth for provisioning over the existing ordering gateway.

2.5 If an OLEC Freeze is placed on the end user account via the FPI field when submitting a new end user account to BellSouth then, BellSouth when BellSouth is notified by an intraLATA or interLATA carrier using a Transaction Code ("TC") "01" PIC order record that an AT&T local end user has changed its intraLATA or interLATA PIC, BellSouth shall reject the order and notify the intraLATA or interLATA carrier that a CARE PIC record should be sent to AT&T. BellSouth shall notify the intraLATA or interLATA carrier by creating a '3148' and shall provide the AT&T Operating Company Code for resale and UNE-P. For Ported Numbers a '3151' reject transaction record will be sent to the submitting carrier. The intraLATA and interLATA carrier should redirect the TC01 order to AT&T for processing the PIC.

ATTACHMENT 8

RIGHTS OF WAY (ROW), CONDUITS, AND POLE ATTACHMENTS

Between

BELLSOUTH TELECOMMUNICATIONS, INC.
(Licensor)

And

AT&T COMMUNICATIONS OF THE SOUTHERN STATES, INC.
(Licensee)

BELLSOUTH License Agreement Number - _____

C O N T E N T S

SECTION		PAGE
1.	Definitions	3
2.	Scope of Agreement	7
3.	Requirements and Specifications	8
4.	Additional Legal Requirements	18
5.	Facilities and Licenses	19
6.	Make-Ready Work	21
7.	Application Forms and Fees	22
8.	Processing of Applications	24
9.	Issuance of Licenses	25
10.	Construction of Licensee's Facilities	26
11.	Use and Routine Maintenance of Licensee's Facilities	29
12.	Modification and Replacement of Licensee's Facilities	29
13.	Rearrangement of Facilities at request of Another	29
14.	Emergency Repairs and Pole Replacements	31
15.	Inspection by BellSouth of Licensee's Facilities	31
16.	Notice of Noncompliance	31
17.	Unauthorized Occupancy or Utilization of BellSouth's Facilities	33
18.	Removal of Licensee's Facilities	34
19.	Fees, Charges, and Billing	34
20.	Advance Payment and Imputation	34
21.	Assurance of Payment	35
22.	Insurance	35
23.	Indemnification	35
24.	Authorization Not Exclusive	35
25.	Assignment of Rights	35
26.	Failure to Enforce	36
27.	Dispute Resolution	36
28.	Supersedure of Agreement(s)	37
29.	Rates	37

EXHIBITS

A	2006 FCC Formula Support Fees	38
B	Records Maintenance Centers	34

RIGHTS OF WAY (ROW), CONDUITS AND POLE ATTACHMENTS

This Attachment 8 sets forth the terms and conditions under which BellSouth shall afford to Licensee access to BellSouth's poles, ducts, conduits and rights-of-way, pursuant to the Act To the extent applicable, this Agreement also sets forth the terms and conditions applicable to request to attach to Joint Use Poles and the relevant defined terms shall be construed to include such Joint Use Poles.

1. DEFINITIONS

Definitions in General. Except as the context otherwise requires, the terms defined in this Section shall, as used herein, have the meanings set forth in Sections 1.1 through 1.32.

1.1 Anchor. The term "anchor" refers to a device, structure, or assembly which stabilizes a pole and holds it in place. An anchor assembly may consist of a rod and fixed object or plate, typically embedded in the ground, which is attached to a guy strand or guy wire, which, in turn, is attached to the pole. The term "anchor" does not include the guy strand which connects the anchor to the pole and includes only those anchors which are owned by BellSouth, as distinguished from anchors which are owned and controlled by other persons or entities.

1.2 Anchor/guy strand. The term "anchor/guy strand" refers to supporting wires, typically stranded together, or other devices attached to a pole and connecting that pole to an anchor or to another pole for the purpose of increasing pole stability. The term "anchor/guy strand" includes, but is not limited to, strands sometimes referred to as "anchor strands," "down guys," "guy strands," and "pole-to-pole guys."

1.3 Application. The process of requesting information related to records, Poles, Conduit and/or Rights-of-Way availability, or make-ready requirements for BellSouth owned or controlled Facilities. Applications shall not be limited as to the maximum number of consecutive Poles, consecutive Manhole sections or feet addressed, but in the event that AT&T submits an application for more than 200 consecutive poles, or 20 consecutive Manhole sections or 10,000 feet, BellSouth may request and AT&T will not unreasonably withhold consent for an extension of the time in which BellSouth will evaluate the application. The Application includes (but is not limited to) request for records, records investigation and/or a field investigation, and Make-Ready Work.

1.4 Communications Act of 1934. The terms "Communications Act of 1934" and "Communications Act" refer to the Communications Act of June 19, 1934, 48 Stat. 1064, as amended, including the provisions codified as 47 U.S.C. Sections 151, et seq. The Communications Act includes the Pole Attachment Act of 1978, as defined in Section 1.23 following.

1.5 Assigned. The term “assigned”, when used with respect to conduit or duct space or pole attachment space, refers to any space in such conduit or duct or on such pole that is occupied by a telecommunications service provider or a municipal or other governmental authority. To ensure the judicious use of poles and conduits, space “assigned” to a telecommunications service provider must be physically occupied by the service provider, be it BellSouth or a new entrant, within twelve (12) months of the space being “assigned”.

1.6 Available. The term “available”, when used with respect to conduit or duct space or pole attachment space , or space in the rights-of-way refers to any usable space in such conduit or duct or on such pole or in such rights-of-way not assigned to a specific provider at the applicable time.

1.7 Conduit. The term Conduit means a structure containing one or more Ducts, usually placed in the ground, in which cables or wires may be installed.

1.8 Conduit occupancy. The terms “conduit occupancy” and “occupancy” refer to the presence of wire, cable, optical conductors, or other facilities within any portion of BellSouth’s conduit system.

1.9 Conduit system. The term “conduit system” means a collection of one or more conduits together with their supporting infrastructure. In this Attachment 8, the term refers to conduit systems owned or controlled by BellSouth.

1.10 Cost. The term “cost” as used herein refers to charges made by BellSouth to Licensee for specific work performed, and shall be (a) the actual reasonable charges made by subcontractors to BellSouth for work and/or, (b) if the work was performed by BellSouth employees, the total estimated charges shall be provided to AT&T before the work is performed.

1.11 Duct. The term "duct" refers to a single enclosed tube, pipe, or channel for enclosing and carrying cables, wires, and other facilities. As used in this Attachment 8, the term "duct" includes "inner ducts" created by subdividing a duct into smaller channels.

1.12 Facilities. The terms "facility" and "facilities" refer to any property or equipment utilized in the provision of telecommunication services.

1.13 The acronym "FCC" refers to the Federal Communications Commission.

1.14 Inner-Duct. The term “inner-duct” refers to a pathway created by subdividing a duct into smaller channels. A duct may be capable of holding only one innerduct.

1.15 Joint User. The term "joint user" refers to a utility which has entered into an agreement with BellSouth providing reciprocal rights of attachment of facilities owned by each Party to the poles, ducts, conduits and rights-of-way owned by the other Party.

1.16 Joint Use Pole. A pole not owned by BellSouth, but upon which BellSouth maintains its Facilities.

1.17 Licensee. The term “licensee” refers to a person or entity, which has entered into an agreement or arrangement with BellSouth permitting such person or entity to place its facilities in BellSouth's conduit system or attach its facilities to BellSouth's poles or anchors.

1.18 Lashing. The term "lashing" refers to the attachment of a sheath or inner-duct to a licensee’s supporting sheath or strand.

1.19 License. The term "license" refers to any license issued pursuant to this Attachment 8 and may, if the context requires, refer to conduit occupancy or pole attachment licenses issued by BellSouth prior to the date of this Attachment 8.

1.20 Make-Ready work. The term "make-ready work" refers to all work performed or to be performed to prepare BellSouth's conduit systems, poles or anchors and related facilities for the requested occupancy or attachment of Licensee's facilities. "Make-Ready work" includes, but is not limited to, clearing obstructions (e.g., by "rodding" ducts to ensure clear passage), the rearrangement, transfer, replacement, and removal of existing facilities on a pole or in a conduit system where such work is required solely to accommodate Licensee's facilities and not to meet BellSouth's business needs or convenience. "Make-Ready work" may require "dig-ups" of existing facilities and may include the repair, enlargement or modification of BellSouth's facilities (including, but not limited to, conduits, ducts, handholes and manholes) or the performance of other work required to make a pole, anchor, conduit or duct usable for the initial placement of Licensee's facilities.

1.21 Manhole. The term "manhole" refers to an enclosure, usually below ground level and entered through a hole on the surface covered with a cast iron or concrete manhole cover, which personnel may enter and use for the purpose of installing, operating, and maintaining facilities in a conduit.

1.22 Occupancy. The term “occupancy” shall refer to the physical presence of telecommunication facilities in a duct, on a pole, or within a Right-of-way.

1.23 Person acting on Licensee's behalf. The terms "person acting on Licensee's behalf," "personnel performing work on Licensee's behalf," and similar terms include both natural persons and firms and ventures of every type, including, but not limited to, corporations, partnerships, limited liability companies, sole proprietorships, and joint ventures. The terms "person acting on Licensee's behalf," "personnel performing work on Licensee's behalf," and similar terms specifically include, but are not limited to, Licensee, its officers, directors, employees, agents, representatives, attorneys, contractors, subcontractors, and other persons or entities performing services at the request of or as directed by Licensee and their respective officers, directors, employees, agents, and representatives.

1.24 Person acting on BellSouth's behalf. The terms "person acting on BellSouth's behalf," "personnel performing work on BellSouth's behalf," and similar terms include both natural persons and firms and ventures of every type, including but not limited to corporations, partnerships, limited liability companies, sole

proprietorships, and joint ventures. The terms "person acting on BellSouth's behalf," "personnel performing work on BellSouth's behalf," and similar terms specifically include, but are not limited to, BellSouth, its officers, directors, employees, agents, representatives, attorneys, contractors, subcontractors, and other persons or entities performing services at the request or on behalf of BellSouth and their respective officers, directors, employees, agents, and representatives.

1.25 Pole. The term "pole" refers to both utility poles and anchors but only to those utility poles and anchors owned or controlled by BellSouth, and does not include utility poles or anchors with respect to which BellSouth has no legal authority to permit attachments by other persons or entities.

1.26 Pole Attachment Act. The terms "Pole Attachment Act" and "Pole Attachment Act of 1978" refer to those provisions of the Communications Act of 1934, as amended, now codified as 47 U.S.C. § 224.

1.27 Prelicense survey. The term "prelicense survey" refers to all work and activities performed or to be performed to determine whether there is adequate capacity on a pole or in a conduit or conduit system (including manholes and handholes) to accommodate Licensee's facilities and to determine what make-ready work, if any, is required to prepare the pole, conduit or conduit system to accommodate Licensee's facilities.

1.28 Right of Way (ROW). The term “right of way” refers to the right to use the land or other property of another Party to place poles, conduits, cables, other structure and equipment, or to provide passage to access such structures and equipment. . A Right of Way may run under, on, or above public or private property (including air space above public or private property) and may include the right to use discrete space in buildings, building complexes, or other locations.

1.29 Sheath. The term "sheath" refers to a single outer covering containing communications wires, fibers, or other communications media.

1.30 Spare Capacity. The term "spare capacity" refers to any pole attachment space, conduit, duct or inner-duct not currently assigned or subject to a pending application for attachment/occupancy. Spare capacity does not include an inner-duct (not to exceed one inner-duct per Party) reserved by BellSouth, Licensee, or a third party for maintenance, repair, or emergency restoration.

1.31 State. When capitalized, the term "State" (as used in terms such as "this State") refers to the State in which the access to BellSouth poles, ducts, conduits or rights-of-way, granted pursuant to this Attachment 8, occurs or attachment is located.

1.32 Third Party. The terms "third party" and "third parties" refer to persons and entities other than Licensee and BellSouth. Use of the term "third party" does not signify that any such person or entity is a party to this Attachment 8 or has any contractual rights hereunder.

2. SCOPE OF AGREEMENT

2.1 Undertaking of BellSouth. BellSouth shall provide Licensee with equal and nondiscriminatory access to pole space, conduits, ducts, and rights-of-way on terms and conditions equal to those provided by BellSouth to itself, subsidiaries or affiliates, or to any other telecommunications service provider. Further, BellSouth shall not withhold or delay assignment of such facilities to Licensee because of the potential or forecasted needs of itself or other parties.

2.2 Attachments and Occupancies Authorized by this Attachment 8. BellSouth shall issue one or more licenses to Licensee authorizing Licensee to attach facilities to BellSouth's owned or controlled poles and to place facilities within BellSouth's owned or controlled conduits, ducts or rights-of-way under the terms and conditions set forth in this Section and the Telecommunications Act of 1996.

2.2.1 Unless otherwise provided herein, authority to attach facilities to BellSouth's owned or controlled poles, to place facilities within BellSouth's owned or controlled conduits, ducts or rights-of-way shall be granted only in individual licenses granted under this Attachment 8 and the placement or use of such facilities shall be determined in accordance with such licenses and procedures established in this Attachment 8.

2.2.2 Licensee agrees that its attachment of facilities to BellSouth's owned or controlled poles, occupancy of BellSouth's owned or controlled conduits, ducts or rights-of-way shall take place pursuant to the licensing procedures set forth herein, and BellSouth agrees that it shall not unreasonably withhold or delay issuance of such licenses.

2.3 Licenses. Subject to the terms and conditions set forth in this Attachment 8, BellSouth shall issue to Licensee one or more licenses authorizing Licensee to place or attach facilities in or to specified poles, conduits, ducts or rights-of-way owned or controlled by BellSouth located within this state on a first come, first served basis. BellSouth may deny a license application if BellSouth determines that the pole, conduit or duct space specifically requested by Licensee is necessary to meet BellSouth's present needs, or is licensed by BellSouth to another licensee, or is otherwise unavailable based on reasonable engineering concerns. BellSouth may deny a license application on a nondiscriminatory basis where there is insufficient capacity or the reasons of safety, reliability and generally applicable engineering purposes. BellSouth’s denial of access shall be specific, shall include all relevant evidence and information supporting its denial, and shall explain how such evidence and information relate to a denial of access for reasons of lack of capacity, safety, reliability or engineering standards. If access is not granted within forty-five (45) days of the request for access, BellSouth must confirm the denial in writing by the forty-fifth day. BellSouth shall have the right to designate the particular duct(s) to be occupied, the location and manner in which Licensee's facilities will enter and exit BellSouth's conduit system and the specific location and manner of installation for any associated equipment which is permitted by BellSouth to occupy the conduit system.

2.4 Access and Use of Rights-of-Way. BellSouth acknowledges that it is required by the Telecommunications Act of 1996 to afford Licensee access to and use of all BellSouth owned or controlled rights-of-way.

2.4.1 BellSouth shall provide Licensee with access to and use of such rights-of-way to the same extent and for the same purposes that BellSouth may access or use such rights-of-way, including but not limited to access for ingress, egress or other access and to construct, utilize, maintain, modify, and remove facilities for which pole attachment, conduit occupancy, or ROW use licenses have been issued, provided that any agreement with a third party under which BellSouth holds such rights expressly or impliedly grants BellSouth the right to provide such rights to others.

2.4.2 Where BellSouth notifies Licensee that BellSouth's agreement with a third party does not expressly or impliedly grant BellSouth the ability to provide such access and use rights to others, upon Licensee's request, BellSouth will use its best efforts to obtain the owner's consent and to otherwise secure such rights for Licensee. Licensee agrees to reimburse BellSouth for the reasonable and demonstrable costs incurred by BellSouth in obtaining such rights for Licensee.

2.4.3 In cases where a third party agreement does not grant BellSouth the right to provide access and use rights to others as contemplated in Section 2.4.1 and BellSouth, despite its best efforts, is unable to secure such access and use rights for Licensee in accordance with Section 2.4.2, or, in the case where Licensee elects not to invoke its rights under Section 2.4.1 or Section 2.4.2, Licensee shall be responsible for obtaining such permission to access and use such rights-of-way. BellSouth shall cooperate with Licensee in obtaining such permission and shall not prevent or delay any third party assignment of ROW's to Licensee.

2.4.4 Where BellSouth has any ownership or rights-of-way to buildings or building complexes, or within buildings or building complexes, BellSouth shall offer to Licensee through a license or other attachment:

2.4.4.1 The right to use any available space owned or controlled by BellSouth in the building or building complex to install Licensee equipment and facilities; and

2.4.4.2 Ingress and egress to such space.

2.4.5 Except to the extent necessary to meet the requirements of the Telecommunications Act of 1996, neither this Attachment 8 nor any license granted hereunder shall constitute a conveyance or assignment of any of either Party's rights to use any public or private rights-of-way, and nothing contained in this Attachment 8 or in any license granted hereunder shall be construed as conferring on one Party any right to interfere with the other Party's access to any such public or private rights-of-way.

2.5 No Effect on BellSouth's Right to Convey Property. Nothing contained in this Attachment 8 or in any license issued hereunder shall in any way affect the right of BellSouth to convey to any other person or entity any interest in real or personal property, including any poles, conduit or ducts to or in which Licensee has

attached or placed facilities pursuant to licenses issued under this Attachment 8 provided however that BellSouth shall give Licensee reasonable advance written notice of such intent to convey.

2.6 No Effect on BellSouth's Rights to Manage its Own Facilities. This Attachment 8 shall not be construed as limiting or interfering with BellSouth's rights set forth below, except to the extent expressly provided by the provisions of this Attachment 8 or licenses issued hereunder or by the Telecommunications Act of 1996 or other applicable laws, rules or regulations.

2.6.1 To locate, relocate, move, replace, modify, maintain, and operate BellSouth's own facilities within BellSouth's conduits, ducts or rights-of way or any of BellSouth's facilities attached to BellSouth's poles at any time and in any reasonable manner which BellSouth deems appropriate to serve its customers, avail itself of new business opportunities, or otherwise meet its business needs; or

2.6.2 To enter into new agreements or arrangements with other persons or entities permitting them to attach or place their facilities to or in BellSouth's poles, conduits or ducts; provided, however, that such relocations, moves, replacements, modifications, maintenance and operations or new agreements or arrangements shall not substantially interfere with Licensee's pole attachment, conduit occupancy or ROW use, rights provided by licenses issued pursuant to this Attachment 8.

2.7 No Effect on Licensee's Rights to Manage its Own Facilities. This Attachment 8 shall not be construed as limiting or interfering with Licensee's rights set forth below, except to the extent expressly provided by the provisions of this Attachment 8 or licenses issued hereunder or by the Telecommunications Act of 1996 or other applicable laws, rules or regulations:

2.7.1 To locate, relocate, move, replace, modify, maintain, and operate its own facilities within BellSouth's conduits, ducts or rights-of-way or its facilities attached to BellSouth's poles at any time and in any reasonable manner which Licensee deems appropriate to serve its customers, avail itself of new business opportunities, or otherwise meet its business needs; or

2.7.2 To enter into new agreements or arrangements with other persons or entities permitting Licensee to attach or place its facilities to or in such other persons' or entities' poles, conduits or ducts, or rights-of-way; provided, however, that such relocations, moves, replacements, modifications, maintenance and operations or new agreements or arrangements shall not conflict with Licensee's obligations under licenses issued pursuant to this Attachment 8.

2.8 No Right to Interfere with Facilities of Others. The provisions of this Attachment 8 or any license issued hereunder shall not be construed as authorizing either Party to this Attachment 8 to rearrange or interfere in any way with any of the other Party's facilities, with the facilities of other persons or entities, or with the use of or access to such facilities by such other Party or such other persons or entities, except to the extent expressly provided by the provisions of this Attachment 8 or

any license issued hereunder or by the Telecommunications Act of 1996 or other applicable laws, rules or regulations …

2.8.1 Licensee acknowledges that the facilities of persons or entities other than BellSouth and Licensee may be attached to or occupy BellSouth's poles, conduits, ducts and rights-of-way.

2.8.2 BellSouth shall not attach, or give permission to any third parties to attach facilities to, existing Licensee facilities, or to use the pole or conduit space allocated to Licensee, without Licensee's prior written consent. If BellSouth becomes aware of any such unauthorized attachment to Licensee facilities, BellSouth shall use its best efforts to rectify the situation as soon as practicable.

2.8.3 With respect to facilities occupied by Licensee or the subject of an application for attachment by Licensee, BellSouth will give to Licensee sixty (60) days' written notice for conduit extensions or reinforcements, sixty (60) days' written notice for pole line extensions, sixty (60) days' written notice for pole replacements, and sixty (60) days' written notice of BellSouth's intention to construct, reconstruct, expand or place such facilities or of BellSouth's intention not to maintain or use any existing facility and, in the case of an existing facility which BellSouth elects not to maintain or use, BellSouth will grant to Licensee a right to maintain and use such facility. If an emergency or provisions of an applicable joint use agreement require BellSouth to construct, reconstruct, expand or replace poles, conduits or ducts occupied by Licensee or the subject of an application for attachment by Licensee, BellSouth will notify Licensee as soon as reasonably practicable of such proposed construction, reconstruction, expansion or replacement to enable Licensee, if it so desires, to request that a pole, conduit or duct of greater height or capacity be utilized to accommodate an anticipated facility need of Licensee.

2.8.4 If necessary to make conduit space available for Licensee's use, upon Licensee's request and at Licensee's expense, BellSouth shall remove any retired cable from conduit systems to allow for the efficient use of conduit space within a reasonable period of time. . BellSouth retains salvage rights on any cable removed. Based on sound engineering judgment, there may be situations where it would neither be feasible nor practical to remove retired cables.

2.9 Assignment of Space. Assignment of space on poles, in conduits or ducts and within ROW's will be made pursuant to licenses granted by BellSouth on an equal basis to BellSouth, Licensee and other telecommunication service providers.

3. REQUIREMENTS AND SPECIFICATIONS

3.1 Published Standards Incorporated in this Section by Reference. Licensee agrees that it shall place, construct, maintain, repair, and remove its facilities in accordance with current (as of the date when such work is performed) editions of the following publications, each of which is incorporated by reference as part of this Section:

3.1.1 The Blue Book Manual of Construction Procedures, Special Report SR-TAP-001421, published by Bell Communications Research, Inc. ("BellCore"), and sometimes referred to as the "Blue Book";

3.1.2 The National Electrical Code (“NEC”); and

3.1.3 The National Electrical Safety Code (“NESC”).

3.2 Changes in Published Standards. Licensee agrees to rearrange its facilities in accordance with changes in the standards published in the publications specified in Section 3.1 of this Attachment 8 if required by law to do so or upon the mutual agreement of the Parties.

3.3 Additional Electrical Design Specifications. Licensee agrees that, in addition to specifications and requirements referred to in Section 3.1 above, Licensee's facilities placed in BellSouth's conduit system shall meet all of the following electrical design specifications:

3.3.1 No facility shall be placed in BellSouth's conduit system in violation of FCC regulations.

3.3.2 Licensee's facilities placed in BellSouth's conduit system shall not be designed to use the earth as the sole conductor for any part of Licensee's circuits.

3.3.3 Licensee's facilities carrying more than 50 volts AC (rms) to ground or 135 volts DC to ground shall be enclosed in an effectively grounded sheath or shield.

3.3.4 No coaxial cable of Licensee shall occupy a conduit system containing BellSouth's cable unless such cable of Licensee meets the voltage limitations of Article 820 of the National Electrical Code.

3.3.5 Licensee's coaxial cable may carry continuous DC voltages up to 1800 volts to ground where the conductor current will not exceed one-half amperes and where such cable has two separate grounded metal sheaths or shields and a suitable insulating jacket over the outer sheath or shield. The power supply shall be so designed and maintained that the total current carried over the outer sheath shall not exceed 200 micro amperes under normal conditions. Conditions which would increase the current over this level shall be cleared promptly.

3.3.6 Neither Party shall circumvent the other Party's corrosion mitigation measures. Each Party's new facilities shall be compatible with the other Party's facilities so as not to damage any facilities of the other Party by corrosion or other chemical reaction.

3.4 Additional Physical Design Specifications. Licensee's facilities placed in BellSouth's conduit system must meet all of the following physical design specifications:

3.4.1 Cables bound or wrapped with cloth or having any kind of fibrous coverings or impregnated with an adhesive material shall not be placed in BellSouth's conduit or ducts.

3.4.2 The integrity of BellSouth's conduit system and overall safety of BellSouth's personnel and other personnel working in BellSouth's conduit system requires that "dielectric cable" be required when Licensee's cable facility utilizes an alternative duct or route that is shared in the same trench by any current carrying facility of a power utility.

3.4.3 New construction splices in Licensee's fiber optic and twisted pair cables shall be located in manholes, pull boxes or handholes.

3.5 Additional Specifications Applicable to Connections. The following specifications apply to connections of Licensee's conduit to BellSouth's conduit system:

3.5.1 Licensee will be permitted to connect its conduit or duct only at the point of a BellSouth manhole. No attachment will be made by entering or breaking into conduit between manholes. All necessary work to install Licensee facilities will be performed by Licensee or its contractor at Licensee's expense. In no event shall Licensee or its contractor "core bore" or make any other modification to BellSouth manhole(s) without the prior written approval of BellSouth, which approval will not be unreasonably delayed or withheld.

3.5.2 BellSouth may monitor, at Licensee's expense, the entrance and exit of Licensee's facilities into BellSouth's manholes and the placement of Licensee's facilities in BellSouth's manholes.

3.5.3 If Licensee constructs or utilizes a duct connected to BellSouth's manhole, the duct and all connections between that duct and BellSouth's manhole shall be sealed, to the extent practicable, to prevent the entry of gases or liquids into BellSouth's conduit system. If Licensee's duct enters a building, it shall also be sealed where it enters the building and at all other locations necessary to prevent the entry of gases and liquids from the building into BellSouth's conduit system.

3.6 Requirements Relating to Personnel, Equipment, Material, and Construction Procedures Generally. Duct clearing, rodding or modifications required to grant Licensee access to BellSouth's conduit systems may be performed by BellSouth at Licensee's expense at charges which represent BellSouth's actual costs. Alternatively (at Licensee's option) such work may be performed by a contractor who demonstrates compliance with BellSouth's certification requirements, which certification requirements shall be consistent with FCC rules and orders. The Parties acknowledge that Licensee, its contractors, and other persons acting on Licensee's behalf will perform work for Licensee (e.g., splicing Licensee's facilities) within BellSouth's conduit system. Licensee shall not permit any person acting on Licencess's behalf to climb or work on or in any of BellSouth's poles or to enter BellSouth's manholes or work within BellSouth's conduit system unless such person has the training, skill, and experience required to recognize potentially dangerous conditions relating to pole or the conduit systems and to perform the work safely.

3.6.1 Licensee's facilities within BellSouth's conduit system shall be constructed, placed, rearranged, modified, and removed by Licensee upon receipt of license specified in

Section 5.1. However, no such license will be required for the inspection, maintenance, repair or non-physical modifications of Licensee's facilities.

3.6.2 "Rodding" or clearing of ducts in BellSouth's conduit system shall be done only when specific authorization for such work has been obtained in advance from BellSouth, which authorization shall not be unreasonably delayed or withheld by BellSouth. The Parties agree that such rodding or clearing shall be performed according to existing industry standards and practices. Licensee may contract with BellSouth for performance of such work or (at Licensee's option) with a contractor who demonstrates compliance with BellSouth certification requirements.

3.6.3 Personnel performing work on BellSouth's or Licensee's behalf in BellSouth's conduit system shall not climb on, step on, or otherwise disturb the other Party's or any third party's cables, air pipes, equipment, or other facilities located in any manhole or other part of BellSouth's conduit system.

3.6.4 Personnel performing work on BellSouth's or Licensee's behalf within BellSouth's conduit system (including any manhole) shall, upon completing their work, make reasonable efforts to remove all tools, unused materials, wire clippings, cable sheathing and other materials brought by them to the work site.

3.6.5 All of Licensee's facilities shall be firmly secured and supported in accordance with Telcordia Technologies and industry standards.

3.6.6 Licensee's facilities shall be plainly identified with Licensee's name in each manhole with a firmly affixed permanent tag that meets standards set by BellSouth.

3.6.7 Identification of Pole Attachments. Licensee's Facilities attached to BellSouth Poles shall be plainly identified with Licensee's name affixed in accordance with Telcordia Technologies' "Blue Book-Manual of Construction Procedures".

3.6.8 Manhole pumping and purging required in order to allow Licensee's work operations to proceed shall be performed by a vendor approved by BellSouth in accordance with industry standard practices and procedures and in compliance with all regulations and standards established by the United States Environmental Protection Agency and by any applicable state or local environmental regulators.

3.6.9 Planks or other types of platforms shall not be installed using cables, pipes or other equipment as a means of support. Platforms shall be supported only by cable racks.

3.6.10 Any leak detection liquid or device used by Licensee or personnel performing work on Licensee's facilities within BellSouth's conduit system shall be of a type approved by BellSouth or Telcordia.

3.6.11 When Licensee or personnel performing work on Licensee's behalf are working within or in the vicinity of any part of BellSouth's poles or conduit system which is located within, under, over, or adjacent to streets, highways, alleys or other traveled rights-of-way, Licensee and all personnel performing work on Licensee's behalf shall follow procedures which Licensee deems appropriate for the

protection of persons and property. Licensee shall be responsible, at all times, for determining and implementing the specific steps required to protect persons and property at the site. Licensee will provide all traffic control and warning devices required to protect pedestrian and vehicular traffic, workers and property from danger. BellSouth shall have no responsibility for the safety of all personnel performing work on Licensee's behalf, for the safety of bystanders, and for insuring that all operations conform to current OSHA regulations and all other governmental rules, ordinances or statutes. BellSouth reserves the right to suspend Licensee's activities on, in or in the vicinity of BellSouth's poles or conduit system if, in BellSouth's reasonable judgment, any hazardous condition arises due to the activity (including both acts and omissions) of Licensee or any personnel performing work on Licensee's behalf, which suspension shall cease when the condition has been rectified.

3.6.12 Except for protective screens, no temporary cover shall be placed by Licensee or personnel performing work on Licensee's behalf over an open manhole unless it is at least four feet above the surface level of the manhole opening.

3.6.13 Smoking or the use of any open flame is prohibited in BellSouth's manholes, in any other portion of BellSouth's conduit system, or within ten (10) feet of any open manhole entrance; provided that this provision will not prohibit the use of spark producing tools such as electric drills, fusion splicers, etc.

3.6.14 Artificial lighting, when required, will be provided by Licensee. Only explosion-proof lighting fixtures shall be used.

3.6.15 Neither Licensee nor personnel performing work on Licensee's behalf shall allow any combustible gas, vapor, liquid, or material to accumulate in BellSouth's conduit system (including any manhole) during work operations performed within or in the vicinity of BellSouth's conduit system.

3.6.16 Licensee will abide by any laws, regulations or ordinances regarding the use of spark producing tools, equipment or devices in BellSouth's manholes, in any other portions of BellSouth's conduit system, or within 10 feet of any open manhole opening. This includes, but is not limited to, such tools as electric drills and hammers, meggers, breakdown sets, induction sets, and the like.

3.7 Opening of Manholes. The following requirements apply to the opening of BellSouth's manholes and the authority of BellSouth personnel present when work on Licensee's behalf is being performed within or in the vicinity of BellSouth's conduit system.

3.7.1 BellSouth's manholes shall be opened only as permitted by BellSouth's authorized employees or agents, which permission shall not be unreasonably denied or delayed.

3.7.2 Licensee shall notify BellSouth forty-eight (48) hours in advance of any routine work operation requiring entry into any of BellSouth’s manholes.

3.7.3 Licensee shall be responsible for obtaining any necessary authorization from appropriate authorities to open manholes for conduit work operations therein.

3.7.4 BellSouth's authorized employee or agent shall not direct or control the conduct of Licensee's work at the work site. The presence of BellSouth's authorized employee or agent at the work site shall not relieve Licensee or personnel performing work on Licensee's behalf of their responsibility to conduct all work operations within BellSouth's conduit system in a safe and workmanlike manner.

3.7.5 Although BellSouth's authorized employee or agent shall not direct or control the conduct of Licensee's work at the work site, BellSouth's employee or agent shall have the authority to suspend Licensee's work operations within BellSouth's conduit system if, in the reasonable discretion of such BellSouth employee or agent, it appears that any hazardous conditions arise or any unsafe practices are being followed by Licensee or personnel performing work on Licensee's behalf.

3.7.6 When an emergency situation arises which necessitates Carrier access to a manhole, Carrier should call BellSouth's Access Customer Advocate Center ("ACAC") or the Unbundled Network Element (UNE) Center. BellSouth will then contact the Maintenance Supervisor who will return the Carrier's call and will arrange for access with on-call maintenance field personnel during the emergency condition on an emergency basis. (A list of contact telephone numbers is available to each CLEC for this purpose).

3.8 Occupational Safety and Health Act ("OSHA") Compliance: Notice to BellSouth of Unsafe Conditions. Licensee agrees that:

3.8.1 Its facilities shall be constructed, placed, maintained, repaired, and removed in accordance with OSHA and all rules and regulations promulgated thereunder;

3.8.2 All persons acting on Licensee's behalf, including but not limited to Licensee's employees, agents, contractors, and subcontractors shall, when working on or within BellSouth's poles or conduit system, comply with OSHA and all rules and regulations thereunder;

3.8.3 Licensee shall establish appropriate procedures and controls to assure compliance with all requirements of this section; and

3.8.4 Licensee (and any person acting on Licensee's behalf) may report unsafe conditions on, in or in the vicinity of BellSouth's poles or conduit system to BellSouth.

3.9 Compliance with Environmental Laws and Regulations. Licensee acknowledges that, from time to time, environmental contaminants may enter BellSouth's conduit system and accumulate in manholes or other conduit facilities and that certain conduits (transite) are constructed with asbestos-containing materials. If BellSouth has knowledge of the presence of such contaminants in a conduit for which Licensee has applied for or holds a license, BellSouth will promptly notify Licensee of such fact.

Notwithstanding any of BellSouth's notification requirements in this Attachment, Licensee acknowledges that some of BellSouth's conduit is fabricated from

asbestos-containing materials. Such conduit is generally marked with a designation of "C Fiber Cement Conduit, " "Transite," or "Johns-Manville AT&T will endeavor to determine whether all conduit not fabricated of plastic, tile, or wood is asbestos-containing and will handle it pursuant to all applicable regulations relating to worker safety and protection of the environment. BellSouth makes no representations to Licensee or personnel performing work on Licensee's behalf that BellSouth's conduit system or any specific portions thereof will be free from environmental contaminants at any particular time. The acknowledgments and representations set forth in the preceding sentence is not intended to relieve BellSouth of any liability which it would otherwise have under applicable law for the presence of environmental contaminants in its conduit facilities. Licensee agrees to comply with the following provisions relating to compliance with environmental laws and regulations:

3.9.1 AT&T may, at its expense, perform such inspections and tests at the site of any pole, duct, conduit, or right-of-way occupied by or assigned to AT&T as AT&T may deem necessary to determine the presence at such sites of environmental contaminants. BellSouth will assist AT&T, at AT&T's request and expense, in the performance of such inspections and tests.

3.9.2 Licensee's facilities shall be constructed, placed, maintained, repaired, and removed in accordance with all applicable federal, state, and local environmental statutes, ordinances, rules, regulations, and other laws, including but not limited to the Resource Conservation and Recovery Act (42 U.S.C. §§ 9601, et seq.), the Toxic Substance Control Act (15 U.S.C. §§ 2601-2629), the Clean Water Act (33 U.S.C. §§ 1251, et seq.), and the Safe Drinking Water Act (42 U.S.C. §§ 300f-300j).

3.9.3 All persons acting on Licensee's behalf, including but not limited to Licensee's employees, agents, contractors, and subcontractors, shall, when working on, within or in the vicinity of BellSouth's poles or conduit system, comply with all applicable federal, state, and local environmental laws, including but not limited to all environmental statutes, ordinances, rules, and regulations.

3.9.4 Licensee shall establish appropriate procedures and controls to assure compliance with all requirements of this section. BellSouth will be afforded a reasonable opportunity to review such procedures and controls and provide comments that will be reasonably considered in advance of their implementation. Review and comment by BellSouth pursuant to this section will be provided in a timely manner.

3.9.5 Licensee and all personnel performing work on Licensee's behalf shall comply with such standards and practices as BellSouth and Licensee may from time to time mutually agree to adopt to comply with environmental laws and regulations. Neither Licensee nor BellSouth nor personnel performing work on either Party's behalf shall discharge water or any other substance from any BellSouth manhole or other conduit facility onto public or private property, including any storm water drainage system, without first testing such water or substance for contaminants in

accordance with mutually agreed standards and practices and determining that such discharge would not violate any environmental law, create any environmental risk or hazard, or damage the property of any person. No such waste material shall be deposited on BellSouth premises for storage or disposal.

3.10 Compliance with Other Governmental Requirements. Licensee agrees that its facilities attached to BellSouth's facilities shall be constructed, placed, maintained, and removed in accordance with the ordinances, rules, and regulations of any governing body having jurisdiction of the subject matter. Licensee shall comply with all statutes, ordinances, rules, regulations and other laws requiring the marking and lighting of aerial wires, cables and other structures to ensure that such wires, cables and structures are not a hazard to aeronautical navigation. Licensee shall establish appropriate procedures and controls to assure such compliance by all persons acting on Licensee's behalf, including but not limited to, Licensee's employees, agents, contractors, and subcontractors.

3.11 Differences in Standards or Specifications. To the extent that there may be differences in any applicable standards or specifications referred to in this Section 3, the most stringent standard or specification shall apply.

3.12 Licensee Solely Responsible for the Condition of Its Facilities. Licensee shall be responsible at all times for the condition of its facilities and its compliance with the requirements, specifications, rules, regulations, ordinances, and laws specified above. In this regard, BellSouth shall have no duty to Licensee to inspect or monitor the condition of Licensee's facilities (including but not limited to splices and other facilities connections) located within BellSouth's conduit and ducts or any attachment of Licensee's facilities to BellSouth's poles, anchors, anchor/guy strands or other pole facilities. BellSouth may, however, conduct such inspections and audits of its poles and conduit system as BellSouth determines reasonable or necessary. Such inspection and audits shall be conducted at BellSouth’s expense with the exception of (1) follow-up inspection to confirm remedial action after an observed Licensee violation of the requirements of this Attachment 8; and (2) inspection of Licensee facilities in compliance with a specific mandate of appropriate governmental authority for which inspections the cost shall be borne by Licensee. Either Party may audit the other Party's compliance with the terms of this Section. Observed safety hazards or imminent facility failure conditions of another Party shall be reported to the affected Party where such Party can be readily identified.

3.13 Efficient use of Conduit. BellSouth will install inner-ducts to increase duct space in existing conduit as facilities permit. The full complement of inner-ducts will be installed which can be accommodated under sound engineering principles. The number of inner-ducts which can reasonably be installed will be determined by BellSouth consistent with industry standards.

4. ADDITIONAL LEGAL REQUIREMENTS

4.1 Third Party Property Owners. Licenses granted under this Section authorize Licensee to place facilities in, or attach facilities to, poles, conduits and ducts and

rights-of-way owned or controlled by BellSouth but do not affect the rights of landowners to control terms and conditions of access to their property.

4.1.1 Licensee agrees that neither Licensee nor any persons acting on Licensee's behalf, including but not limited to Licensee's employees, agents, contractors, and subcontractors, shall engage in any conduct which damages public or private property in the vicinity of BellSouth's poles or conduit system, interferes in any way with the use or enjoyment of public or private property except as expressly permitted by the owner of such property, or creates a hazard or nuisance on such property (including, but not limited to, a hazard or nuisance resulting from any abandonment or failure to remove Licensee's facilities or any construction debris from the property, failure to erect warning signs or barricades as may be necessary to give notice to others of unsafe conditions on the premises while work performed on Licensee's behalf is in progress, or failure to restore the property to a safe condition after such work has been completed).

4.2 Required Permits, Certificates and Licenses. Licensee shall be responsible for obtaining any building permits or certificates from governmental authorities necessary to construct, operate, maintain and remove its facilities on public or private property.

4.2.1 Licensee shall not attach or place its facilities to or in BellSouth's poles, conduit or duct located on any property for which it or BellSouth has not first obtained all required authorizations.

4.2.2 BellSouth shall have the right to request evidence that all appropriate authorizations have been obtained. However, such request shall not delay BellSouth's prelicense survey work.

4.3 Lawful Purposes. All facilities placed by Licensee in BellSouth's conduit and ducts or on BellSouth's rights-of-way poles, anchors or anchor/guy strands must serve a lawful purpose and the uses made of Licensee's facilities must comply with all applicable federal, state, and local laws and with all federal, state, and local regulatory rules, regulations, and requirements. In this regard, Licensee shall not utilize any facilities occupying or attached to BellSouth's conduits, ducts, poles or rights-of-way for the purpose of providing any services which it is not authorized by law to provide or for the purpose of enabling any other person or entity to provide any such services.

5. FACILITIES AND LICENSES

5.1 Licenses Required. Before placing any facilities in BellSouth's rights-of way, conduits or ducts or attaching any facilities to BellSouth's poles, anchors or anchor/guy strands, Licensee must first apply for and receive a written license from BellSouth. BellSouth shall not unreasonably deny or delay issuance of any license.

5.2 Provision of Records and Information to Licensee. In order to obtain information regarding BellSouth facilities, Licensee shall make a written request to BellSouth, identifying with reasonable specificity the geographic area for which facilities are required, the types and quantities of the required facilities and the required in-

service date. In response to such request, BellSouth shall provide Licensee with information regarding the types, quantity and location (which may be provided by provision of route maps) and availability of BellSouth poles, conduit and right-of-way located within the geographic area specified by Licensee. Provision of information under the terms of this section shall include the right of Licensee employees or agents to obtain copies of engineering records or drawings which pertain to those facilities within the geographic area identified in Licensee's request. Such copies of records shall be provided to Licensee via courier at expense of Licensee or otherwise available at the records location center set forth in Exhibit B. However, all requests for copies of records shall be submitted to the Competitive Structures Provisioning Center in Birmingham, Alabama.

5.3 No Warranty of Record Information. Licensee acknowledges that records and information provided by BellSouth pursuant to paragraph 5.2 may not reflect field conditions and that physical inspection is necessary to verify presence and condition of outside plant facilities and right of way. In providing such records and information, BellSouth assumes no liability to Licensee or any third party for errors/omissions contained therein.

5.4 Determination of Availability. BellSouth shall provide pole, conduit and right-of-way availability information in response to a request from Licensee which identifies with reasonable specificity the BellSouth facilities for which such information is desired. Licensee may elect to be present at any field based survey of facilities identified pursuant to this paragraph and BellSouth shall provide Licensee at least forty-eight (48) hours notice prior to initiating such field survey. Licensee employees or agents shall be permitted to enter BellSouth manholes and inspect such structures to confirm usability and/or evaluate condition of the structure(s) with at least forty-eight (48) hours notice to BellSouth, with a BellSouth representative present and at Licensee's expense.

5.5 Assignment of Conduit, Duct and Pole Space. BellSouth shall not unreasonably deny or delay issuance of any License and, in any event, BellSouth shall issue such License as follows: (a) after the determination has been made that Make-Ready Work is not required, or (b) completion of Make-Ready Work.

5.5.1 No Make-Ready Work Required. If no Make-Ready Work is required, BellSouth shall approve Applications for Pole attachment and Conduit Occupancy Licenses and issue such Licenses within twenty (20) business days after the determination has been made that no Make-Ready Work is required, but in no event later than 45 days after BellSouth receives Licensee's Application.

5.5.2 Make-Ready Work Required. If Make-Ready Work is to be performed by BellSouth, such available space shall remain in effect until make-ready costs are presented to Licensee and approval by Licensee pursuant to the time frames herein stated in 6.2. If Licensee approves BellSouth's make-ready costs, Licensee shall have twelve (12) months from the date of Application approval to install its Facilities.

5.6 Where the Licensee is authorized to perform Make Ready Work itself or through a contractor and elects to do so, Licensee shall install its Facilities within twelve (12) months from the date that Licensee informs BellSouth that Licensee will perform Make-Ready Work. In the event Licensee does not install its Facilities within the time frames set out in this Section 5.4, the assignment shall be void and such space shall become available.

6. MAKE-READY WORK

6.1 Work Performed by BellSouth. If performed by BellSouth, make-ready work to accommodate Licensee's facilities shall be included in the normal work load schedule of BellSouth with construction responsibilities in the geographic areas where the relevant poles or conduit systems are located and shall not be subjugated to BellSouth work, nor entitled to priority, advancement, or preference over other work to be performed by BellSouth in the ordinary course of BellSouth's business. BellSouth shall process the Application and perform the make-ready work with the same dispatch as it processes its own internal reviews for similar work prior to making attachments or installing fiber in conduit and its own make-ready work.

6.1.1 If Licensee desires make-ready work to be performed on an expedited basis and BellSouth agrees to perform the work on such a basis, BellSouth shall recalculate the estimated make-ready charges. If Licensee accepts BellSouth's offer, Licensee shall pay such additional charges.

6.2 All charges for make-ready work performed by BellSouth are payable in advance, with the amount of any such advance payment to be due within sixty (60) days after receipt of an invoice from BellSouth.

6.3 Work Performed by Certified Contractor. In lieu of obtaining performance of make-ready work by BellSouth, Licensee at its option may arrange for the performance of such work by a contractor certified by BellSouth to work on or in its facilities. Certification shall be granted based upon reasonable and customary criteria employed by BellSouth in the selection of its own contract labor. Notwithstanding any other provisions of this Section, Licensee may not employ a contractor to accomplish make-ready work if BellSouth is likewise precluded from contractor selection under the terms of an applicable joint use agreement **or** collective bargaining agreement. In accordance with Section 3.6.8, all manhole pumping and purging shall be performed by a vendor approved by BellSouth or otherwise qualified and skilled to perform the work.

6.4 Completion of Make-Ready Work. BellSouth will issue a license to Licensee at the time all make-ready work necessary to Licensee's attachment or occupancy has been completed.

6.5 Make Ready Application Process:

- Within five business days of receipt by BellSouth of an AT&T application to attach to poles (*i.e.*, within the 45-day period specified in Attachment 8 § 2.3) ("Pole Application"), BellSouth shall provide AT&T with formal notification as to whether AT&T's application is complete (i.e. all basic information required for processing of the Pole Application has been submitted). If necessary information is missing from AT&T's Pole Application, the pre-survey process outlined below will not begin until AT&T provides the necessary information in response to BellSouth's request. Within fifteen business days of notifying AT&T that its Pole Application is complete, BellSouth will provide AT&T with its invoice (including supporting documentation) for all pre-survey work associated with the Pole Application. AT&T will provide AT&T with pre-payment, as identified in the BellSouth invoice, for pre-survey work within seven business days of receipt of BellSouth's invoice (the "Survey Payment").

- Within 45 days of receipt by BellSouth of AT&T's application to attach to poles, BellSouth shall use its best efforts to complete all tasks necessary to determine whether Make-Ready needs to be performed in order to accommodate any of the attachments identified in AT&T's application. As provisioned in the agreement, BellSouth will expedite Make Ready work to help meet AT&T's requested due date.

- In order to determine whether Make Ready is necessary on any of the poles contained in AT&T's application, BellSouth shall use its best efforts to perform or cause to be performed the following tasks within 45 days of BellSouth's receipt of AT&T's application to attach and Survey Payment:

  - Survey by BellSouth of its own and all Third-Party attachers on the pole.
  - Make-ready engineering assessment by BellSouth and all Third-Party attachers on the pole.
  - Preparation and delivery to AT&T of the Make Ready work assessment and cost estimate, if any; and
  - Any other task necessary to determine whether make-ready must be performed by BellSouth or third parties on any of the poles involved in AT&T's application.

- In connection with each of the foregoing tasks, BellSouth will use its best efforts to coordinate with Third Parties, as necessary, for the completion of necessary Make Ready work. However, AT&T agrees to promptly coordinate billing and payment arrangements with any identified Third Party for Make Ready Work.

- If the foregoing tasks can reasonably be completed within 45 days, BellSouth shall endeavor to complete such tasks within such lesser amount of time, granting AT&T non-discriminatory access to any of the requested poles, which are continuous, and that do not require BellSouth or third party make-ready within the same time period that it would grant access to itself under similar circumstances, but in any event within the 45-day period specified in Attachment 8 § 2.3. If it is determined that a group of adjacent poles in the Pole Application do not require Make Ready, BellSouth will segment, and process according to the terms of this Agreement, that group as part of a new application, which can be approved without waiting for other Make Ready work to be completed.

- Upon receipt of AT&T's Make Ready Payment for estimated Make Ready costs, BellSouth shall initiate and complete Make Ready as soon as practicable under the particular circumstances (*i.e.*, within the same time frames as BellSouth would perform make-ready and cause make-ready to be performed for itself). BellSouth agrees to notify and coordinate the necessary Make Ready work to be performed by third parties, as soon as practicable under the particular circumstances however, BellSouth cannot manage or direct third parties.

6.5.1 In connection with any dispute regarding the accuracy of costs for Survey Payment or Make Ready Payment work, AT&T may pursue dispute resolution in accordance with the General Terms and Conditions of this Agreement.

6.5.2 BellSouth shall advise AT&T whenever it believes it will not be able to meet the commitments set forth above with respect to a specific Application. This information shall be communicated to AT&T promptly. In the event of a dispute, the Parties will endeavor to resolve the dispute within thirty (30) calendar days of the dispute notification date. If the Parties are unable to reach resolution within the thirty (30) day period, then the aggrieved Party may pursue dispute resolution in accordance with the General Terms and Conditions of this Agreement.

7. APPLICATION FORM AND FEES

7.1 Application Process. To apply for a license under this Section, Licensee shall submit to BellSouth two signed copies of an Application and Conduit Occupancy License form or an Application and Pole Attachment License form. BellSouth will process license applications in the order in which they are received; provided, however, that when Licensee has multiple applications on file with BellSouth, Licensee may designate its desired priority of completion of prelicense surveys and make-ready work with respect to all such applications.

7.1.1 Each application for a license under this Section shall specify the proposed route of Licensee's facilities and identify the rights-of-way, conduits and ducts or poles and pole facilities along the proposed route in which Licensee desires to place or attach its facilities, and describe the physical size, weight and jacket material of the cable which Licensee desires to place in each conduit or duct or the number and type of cables, apparatus enclosures and other facilities which Licensee desires to attach to each pole or the Licensee Facilities that Licensee wishes to place in the rights-of-way.

7.1.2 Each application for a license under this Section shall be accompanied by a proposed (or estimated) construction schedule containing the information specified below in Section 10.1 of this Attachment 8, and an indication of whether Licensee will, at its option, perform its own make-ready work.

7.2 Multiple Cables, Multiple Services, Lashing or Placing Additional Cables, and Replacement of Facilities. Licensee may include multiple cables in a single license application and multiple services (e.g., CATV and non-CATV services) may be provided by Licensee in the same cable sheath. Licensee's lashing additional cable to existing facilities and placing additional cables in conduits or ducts already occupied by Licensee's facilities shall be permitted, and no additional fees will be applied; provided, however, that if Licensee shall notify BellSouth where it lashes additional cable to existing facilities of a third party. If BellSouth determines that the lashing violates safety or engineering requirements, BellSouth shall provide written notice to Licensee within a reasonable time specifying in detail BellSouth's findings. If Licensee desires to place additional cables in conduits or ducts which are already occupied by Licensee, or to replace existing Licensee facilities with new facilities substantially different in size or weight from those described in licenses in effect, Licensee must apply for and acquire a new license specifically describing the physical size, weight and jacket material of the cable to be placed in BellSouth's conduits and ducts or the physical size, weight, and jacket type of cables and the size and weight of apparatus enclosures and other Licensee facilities to be attached to BellSouth poles.

7.3 Each Party hereby designates the employees named below as their single point of contact for any and all purposes of this Section, including, but not limited to, processing licenses and applications and providing records and information. Each party may at any time designate a new point of contact by giving written notice of such change.

	Notices	**Billing Address**
To Licensee as follows:		
Contact	Bill C. Peacock	
Title	District Manager	
Company	AT&T	

Address	6305 Highway 5	
Address		
City, State, and Zip Code	Douglasville, GA 30135	
Telephone	(678) 715-0289	
Facsimile	(281) 664-4382	
and to Licensor as follows:		
Contact	Arthur Williams	
Title	Manager	
Company	BellSouth Telecommunications, Inc.	
Address	North W3D2	
Address	3535 Colonnade Parkway	
City, State, and Zip Code	Birmingham, AL 35243	
Telephone	(205) 977-5068	
Facsimile	(205) 977-7997	

8. PROCESSING OF APPLICATIONS (INCLUDING PRELICENSE SURVEYS AND FIELD INSPECTIONS)

8.1 Licensee's Priorities. When Licensee has multiple applications on file with BellSouth, Licensee shall designate its desired priority of completion of prelicense surveys and make-ready work with respect to all such applications.

Prelicense Survey. After Licensee has submitted its written application for a license, a prelicense survey (including a field inspection) will be performed by either Party, in the company of a representative of the other Party as mutually agreed, to determine whether BellSouth's poles, anchors and anchor/guy strands, or conduit system, in their present condition, can accommodate Licensee's facilities, without substantially interfering with the ability of BellSouth or any other authorized person or entity to use or access the pole, anchor or anchor/guy strand or any portion of BellSouth's conduit system or facilities attached to BellSouth's pole or placed within or connected to BellSouth's conduit system. If Licensee gives its prior written consent in writing, the determination of duct availability may include the "rodding" of ducts at Licensee's expense.

8.1.1 The purpose of the prelicense survey is to determine whether Licensee's proposed attachments to BellSouth's poles or occupancy of BellSouth's conduit and ducts will substantially interfere with use of BellSouth's facilities by BellSouth and others with facilities occupying, connected or attached to BellSouth's pole or conduit system; and to provide information to Licensee for its determination of whether the

pole, anchor, anchor/guy strand, conduit, duct, or right-of-way is suitable for its use.

8.1.2 Based on information provided by BellSouth and the survey, Licensee shall determine whether BellSouth's pole, anchor, anchor/guy strand, conduit and duct facilities are suitable to meet Licensee's needs.

8.1.3 BellSouth may not unreasonably refuse to continue to process an application based on BellSouth's determination that Licensee's proposed use of BellSouth's facilities will not be in compliance with applicable requirements, specifications, rules, regulations, ordinances, and laws. Licensee shall be responsible for making its own, independent determination that its use of such facilities will be in compliance with such requirements, specifications, rules, regulations, ordinances and laws. Licensee acknowledges that BellSouth is not explicitly or implicitly warranting to Licensee that Licensee's proposed use of BellSouth's facilities will be in compliance with applicable requirements, specifications, rules, regulations, ordinances, and laws.

8.2 Administrative Processing. The administrative processing portion of the prelicense survey (which includes without limitation processing the application, preparing make-ready work orders, notifying joint users and other persons and entities of work requirements and schedules, coordinating the relocation/rearrangement of BellSouth and/or other licensed facilities) will be performed by BellSouth at Licensee’s expense. Anything to the contrary herein notwithstanding, BellSouth shall bear no responsibility for the relocation, rearrangement or removal of facilities used for the transmission or distribution of electric power.

9. ISSUANCE OF LICENSES

9.1 Obligation to Issue Licenses. BellSouth shall issue a license to Licensee pursuant to this Section 9. BellSouth and Licensee acknowledge that each application for a license shall be evaluated on an individual basis. Nothing contained in this section shall be construed as abridging any independent pole attachment rights or conduit or duct or rights-of-way access rights which Licensee may have under the provisions of any applicable federal or state laws or regulations governing access to BellSouth's poles, conduits and ducts and right-of-way to the extent the same are not inconsistent with the Telecommunications Act of 1996. Each license issued hereunder shall be for an indefinite term, subject to Licensee's compliance with the provisions applicable to such license and further subject to Licensee's right to terminate such license at any time for any reason upon at least thirty (30) days' prior written notice.

9.2 Multiple Applications. Licensee acknowledges that multiple parties including BellSouth may seek to place their facilities in BellSouth's conduit and ducts or on its poles or in its rights-of-way at or about the same time, that the make-ready work required to prepare BellSouth's facilities to accommodate multiple applicants may differ from the make-ready work required to accommodate a single applicant, that issues relating to the proper apportionment of costs arise in multi-applicant situations that do not arise in single-applicant situations, and that cooperation and

negotiations between all applicants and BellSouth may be necessary to resolve disputes involving multiple applications for permission to place facilities in/on the same pole, conduit, duct, or right-of-way.

9.2.1 All applications will be processed on a first-come, first-served basis.

9.3 Agreement to Pay for All Make-Ready Work Completed. Licensee's submission of written authorization for BellSouth's performance of make-ready work shall also constitute Licensee's agreement to pay additional cost-based charges, if any, for completed make-ready work.

9.4 Payments to Others for Expenses Incurred in Transferring or Arranging Their Facilities. Licensee shall make arrangements with the owners of other facilities located in or connected to BellSouth's conduit system or attached to BellSouth's poles, anchors or anchor/guy strands regarding reimbursement for any expenses incurred by them in transferring or rearranging their facilities to accommodate the placement or attachment of Licensee's facilities in or to BellSouth's structures.

9.5 License. When Licensee's application for a pole attachment or conduit occupancy license is approved, and all required make-ready work completed, BellSouth will execute and return a signed authorization to Licensee, as appropriate, authorizing Licensee to attach or place the specified facilities on BellSouth's poles or in BellSouth's conduit or ducts or its rights-of-way.

9.5.1 Each license issued under this Section shall authorize Licensee to attach to BellSouth's poles or place or maintain in BellSouth's conduit or ducts or rights-of-way only those facilities specifically described in the license, and no others.

9.5.2 Except as expressly stated to the contrary in individual licenses issued hereunder, each license issued pursuant to this Section shall incorporate all terms and conditions of this Section whether or not such terms or conditions are expressly incorporated by reference on the face of the license itself.

10. CONSTRUCTION OF LICENSEE'S FACILITIES

10.1 Construction Schedule. Licensee shall submit with Licensee's license application a proposed or estimated construction schedule. Promptly after the issuance of a license permitting Licensee to attach facilities to BellSouth's poles or place facilities in BellSouth's conduit or ducts, Licensee shall provide BellSouth with an updated construction schedule and shall thereafter keep BellSouth informed of significant anticipated changes in the construction schedule. Construction schedules required by this Section shall include, at a minimum, the following information:

10.1.1 The name, title, business address, and business telephone number of the manager responsible for construction of the facilities;

10.1.2 The names of each contractor and subcontractor which will be involved in the construction activities;

10.1.3 The estimated dates when construction will begin and end; and

10.1.4 The approximate dates when Licensee or persons acting on Licensee's behalf will be performing construction work in connection with the placement of Licensee's facilities in BellSouth's conduit or ducts.

10.2 Additional Pre-construction Procedures for Facilities Placed in Conduit System. The following procedures shall apply before Licensee places facilities in BellSouth's conduit system:

10.2.1 Licensee shall give written notice of the type of facilities which are to be placed; and

10.2.2 BellSouth shall designate the particular duct or ducts or inner ducts (if available) to be occupied by Licensee's facilities, the location and manner in which Licensee's facilities will enter and exit BellSouth's conduit system, and the specific location and manner of installation of any associated equipment which is permitted by BellSouth to occupy the conduit system. Licensee may not occupy a duct other than the specified duct without the express written consent of BellSouth. BellSouth shall provide to Licensee space in manholes for racking and storage of up to fifty (50) feet of cable, provided space is available.

10.3 BellSouth Not Responsible for Constructing or Placing Facilities. BellSouth shall have no obligation to construct any facilities for Licensee or to attach Licensee's facilities to, or place Licensee's facilities in BellSouth's poles or conduit system, except as may be necessary to facilitate the interconnection of unbundled network elements or except to the extent expressly provided in this Section, any license issued hereunder, or by the Telecommunications Act of 1996 or any other applicable law.

10.4 Licensee Responsible for Constructing, Attaching and Placing Facilities. Except where otherwise mutually agreed by Licensee and BellSouth, Licensee shall be responsible for constructing its own facilities and attaching those facilities to, or placing them in BellSouth's poles, conduit or ducts, rights-of-way at Licensee's sole cost and expense. Licensee shall be solely responsible for paying all persons and entities who provide materials, labor, access to real or personal property, or other goods or services to or on behalf of Licensee in connection with the construction and placement of Licensee's facilities and for directing the activities of all persons acting on Licensee's behalf while performing activities under this Agreement.

10.5 Licensee shall not permit any person acting on Licensee’s behalf to perform any work on BellSouth’s poles or within BellSouth’s conduit system without first verifying, to the extent practicable, on each date when such work is to be performed, that the condition of the pole or conduit system is suitable for the work to be performed. If Licensee or any person working on Licensee’s behalf determines that the condition of the pole or conduit system is not suitable for the work to be performed, Licensee shall notify BellSouth of the condition of the pole or conduit system in question and shall not proceed with construction activities until Licensee is satisfied that the work can be safely performed.

10.6 Construction Notices. If requested to do so, Licensee shall provide BellSouth with information to reasonably assure BellSouth that construction has been performed in accordance with all applicable standards and requirements.

10.7 Points for Attachment. BellSouth shall specify, using the same selection criteria it uses for its own operating company, the point of attachment of each pole or anchor to be occupied by Licensee's facilities. When the facilities of more than one applicant are involved, BellSouth will attempt, to the extent practicable, to designate the same relative position on each pole or anchor for each applicant's facilities.

10.8 Manhole and Conduit Break-Outs. Licensee shall be permitted to add conduit ports to BellSouth manholes when existing conduits do not provide the pathway connectivity needed by Licensee; provided the structural integrity of the manhole is maintained, and sound engineering judgment is employed.

10.9 Completion of Licensee Installation. For each Licensee conduit occupancy within BellSouth Facilities, Licensee will provide to BellSouth's single-point of contact (within 20 days of Licensee fiber installation date) and a complete set of actual placement drawings for posting to BellSouth records.

11. USE AND ROUTINE MAINTENANCE OF LICENSEE'S FACILITIES

11.1 Use of Licensee's Facilities. Each license granted under this Section authorizes Licensee to have access to Licensee's facilities on or in BellSouth's poles, conduits and ducts or rights-of-way, as allowed or permitted by the Telecommunications Act of 1996.

11.2 Routine Maintenance of Licensee's Facilities. Each license granted under this Section authorizes Licensee to engage in routine maintenance of Licensee's facilities located on or in BellSouth's poles, conduits, ducts and ROW pursuant to such license. Licensee shall give reasonable notice to the affected public authority or private landowner as lawfully required before commencing the construction or installation of its attachments or making any material alterations thereto. Licensee shall give reasonable notice to BellSouth before performing any work, whether or not of a routine nature, in BellSouth’s conduit system.

11.3 Licensee Responsible for Maintenance of Licensee's Facilities. Licensee shall maintain its facilities in accordance with the provisions of this Section (including but not limited to all requirements set forth above in this Attachment 8) and all licenses issued hereunder. Licensee shall be solely responsible for paying all persons and entities who provide materials, labor, access to real or personal property, or other goods or services in connection with the maintenance of Licensee's facilities and for directing the activities of all persons acting on Licensee's behalf while performing activities under this Attachment.

11.4 BellSouth Not Responsible for Maintaining Licensee's Facilities. BellSouth shall have no obligation to maintain any facilities which Licensee has attached or connected to, or placed in, BellSouth's poles, conduits, ducts or any portion of BellSouth's conduit system, except to the extent expressly provided by the

provisions of this Section or any license issued hereunder, or by the Telecommunications Act of 1996 or other applicable laws, rules or regulations.

11.5 Information Concerning the Maintenance of Licensee's Facilities. Promptly after the issuance of a license permitting Licensee to attach facilities to, or place facilities in BellSouth's poles, conduits or ducts, Licensee shall provide BellSouth with the name, title, business address, and business telephone number of the manager responsible for routine maintenance of Licensee's facilities, and shall thereafter notify BellSouth of changes to such information. The manager responsible for routine maintenance of Licensee's facilities shall, on BellSouth's request, identify any contractor, subcontractor, or other person performing maintenance activities on Licensee's behalf at a specified site and shall, on BellSouth's request, provide such additional documentation relating to the maintenance of Licensee's facilities as reasonably necessary to demonstrate that Licensee and all persons acting on Licensee's behalf are complying with the requirements of this Section and licenses issued hereunder.

11.6 Identification of Personnel Authorized to Have Access to Licensee's Facilities. All personnel authorized to have access to Licensee's facilities shall, while working on BellSouth's poles, in its conduit system or ducts or in the vicinity of such poles, ducts or conduit systems, carry with them suitable identification and shall, upon the request of any BellSouth employee, produce such identification.

12. MODIFICATION AND REPLACEMENT OF LICENSEE'S FACILITIES

12.1 Notification of Planned Modification or Replacement of Facilities. Licensee shall, when practicable, notify BellSouth in writing at least sixty (60) days before adding to, relocating, replacing or otherwise modifying its facilities attached to a BellSouth pole, anchor or anchor/guy strand or located in any BellSouth conduit or duct that will result in any of the conditions identified in 12.2 below. The notice shall contain sufficient information to enable BellSouth to determine whether the proposed addition, relocation, replacement, or modification is permitted under Licensee's present license or requires a new or amended license.

12.2 New or Amended License Required. A new or amended license will be required if the proposed addition, relocation, replacement, or modification:

12.2.1 Requires that Licensee use additional space on BellSouth's poles or in its conduits or ducts (including but not limited to any additional ducts, inner ducts, or substantial space in any handhole or manhole) on either a temporary or permanent basis; or

12.2.2 Results in the size or location of Licensee's facilities on BellSouth's poles or in its conduit or ducts being appreciably different from those described and authorized in Licensee's present license (e.g., different duct or size increase causing a need to re-calculate storm loadings, guying, or pole class).

13. REARRANGEMENT OF FACILITIES AT THE REQUEST OF ANOTHER

13.1 Make-Ready Work at the Request of Licensee. If, prior to the issuance of a license, Licensee determines that any pole, anchor, anchor/guy strand, conduit or duct is inadequate to accommodate Licensee's proposed pole attachment or conduit occupancy or that it will be necessary or desirable for BellSouth or any other person or entity to rearrange existing facilities or structures to accommodate Licensee, Licensee shall promptly advise BellSouth of the make-ready work it believes necessary to enable the accommodation of Licensee's facilities.

13.1.1 BellSouth shall determine, in the exercise of sound engineering judgment, whether or what make-ready work is necessary or possible. In determining whether make-ready work is necessary or what make-ready work is necessary, BellSouth shall endeavor to minimize its costs to Licensee. If it is determined that such make-ready work is required, BellSouth shall provide Licensee with the estimated costs for make-ready work and a Make Ready Due Date pursuant to Section 6.5.

13.1.2 Licensor shall be solely responsible for coordinating with other attachers for the rearrangement of such persons' or entities' facilities or structures needed to accommodate Licensee’s attachments and, except where such rearrangement is for the benefit of BellSouth and/or other licensees as well as Licensee, Licensee shall be solely responsible for paying all charges attributable to the rearrangement of such facilities; provided, however, that if facilities rearrangements require new licenses from BellSouth, BellSouth shall issue such licenses in conjunction with the issuance of the applied-for license to Licensee.

13.2 Rearrangement of Licensee's Facilities at BellSouth's Request. Licensee acknowledges that, from time to time, it may be necessary or desirable for BellSouth to change out poles, relocate, reconstruct, or modify portions of its conduit system or rearrange facilities contained therein or connected thereto and that such changes may be necessitated by BellSouth's business needs or authorized application of another entity seeking access to BellSouth's poles or conduit systems. Licensee agrees that Licensee will, upon BellSouth's request, and at BellSouth's expense, but at no cost to Licensee, participate with BellSouth (and other licensees) in the relocation, reconstruction, or modification of BellSouth's conduit system or facilities rearrangement provided that the Parties use their best efforts to avoid disruption of service to Licensee’s customers or facility based service denial to a Licensee customer. Any modifications or rearrangements shall be done in accordance with Sections 224(h) and (i) of the Act.

13.2.1 Licensee shall make all rearrangements of its facilities within such period of time as is jointly deemed reasonable by the Parties based on the amount of rearrangements necessary and a desire to minimize chances for service interruption or facility-based service denial to a Licensee customer.

13.2.2 If Licensee fails to make the required rearrangements within the time prescribed or within such extended periods of time as may be granted by BellSouth in writing,

BellSouth may perform such rearrangements with 30 days prior written notice to Licensee and opportunity to cure or to challenge BellSouth's determination, and Licensee shall reimburse BellSouth for actual costs and expenses incurred by BellSouth in connection with the rearrangement of Licensee's facilities; provided, however, that nothing contained in this Section or any license issued hereunder shall be construed as requiring Licensee to bear any expenses which, under the Telecommunications Act of 1996 or other applicable federal or state laws or regulations, are to be allocated to persons or entities other than Licensee; and provided further, however, that Licensee shall have no responsibility for rearrangement costs and expenses relating to rearrangements performed for the purpose of meeting BellSouth's business needs or that are not reasonable.

14. EMERGENCY REPAIRS AND POLE REPLACEMENTS

14.1 Licensee Responsible for Emergency Repairs to its Own Facilities. In general, Licensee shall be responsible for making emergency repairs to its own facilities and for formulating appropriate plans and practices which will enable it to make such emergency repairs. BellSouth shall be under no obligation to perform any repair or service restoration work of any kind with respect to Licensee's facilities.

15. INSPECTION BY BELLSOUTH OF LICENSEE'S FACILITIES

15.1 BellSouth's Right to Make Periodic or Spot Inspections. BellSouth shall have the right to make periodic or spot inspections at any time of any part of Licensee's facilities attached to BellSouth's poles, anchors or anchor/guy strands or occupying any BellSouth conduit or duct for the limited purpose of determining whether Licensee's facilities are in compliance with the terms of this Section and licenses hereunder; provided that such inspections must be non-invasive (e.g., no splice cases may be opened).

15.1.1 BellSouth will give Licensee advance written notice of such inspections, and Licensee shall have the right to have a representative attend such inspections, except in those instances where safety considerations justify the need for such inspection without the delay of waiting until written notice has been forwarded to Licensee.

15.1.2 Such inspections shall be conducted at BellSouth's expense; provided, however, that Licensee shall bear the cost of inspections as delineated in Section 3.12.

15.2 No Duty to Licensee. Neither the act of inspection by BellSouth of Licensee's facilities nor any failure to inspect such facilities shall operate to impose on BellSouth any liability of any kind whatsoever or to relieve Licensee of any responsibility, obligations or liability under this Section or otherwise existing.

16. NOTICE OF NONCOMPLIANCE

16.1 Notice of Noncompliance. If, at any time, BellSouth determines that Licensee's facilities or any part thereof have not been placed or maintained or are not being used in accordance with the requirements of this Attachment 8, BellSouth may send written notice to Licensee specifying the alleged noncompliance. If Licensee

does not dispute BellSouth's assertion that such facilities are not in compliance, Licensee agrees to provide BellSouth with a schedule for bringing such facilities into compliance, to bring the facilities into compliance within a reasonable time, and to notify BellSouth in writing when the facilities have been brought into compliance.

16.2 Disputes over Alleged Noncompliance. If Licensee disputes BellSouth's assertion that Licensee's facilities are not in compliance, Licensee shall notify BellSouth in writing of the basis for Licensee's assertion that its facilities are in compliance.

16.3 Failure to Bring Facilities into Compliance. If Licensee has not brought the noncompliant facilities into compliance within a reasonable time or provided BellSouth with proof sufficient to persuade BellSouth that BellSouth erred in asserting that the facilities were not in compliance, and if BellSouth determines in good faith that the alleged noncompliance causes or is likely to cause material damage to BellSouth's facilities or those of other users, BellSouth may, at its option and Licensee's expense, upon 30 days prior written notice and opportunity to cure or challenge BellSouth's determination, take such non-service affecting steps as may be required to bring Licensee's facilities into compliance, including but not limited to correcting any conditions which do not meet the specifications of this Attachment 8.

16.4 Correction of Conditions by BellSouth. If BellSouth elects to bring Licensee's facilities into compliance, the provisions of this Section shall apply.

16.4.1 BellSouth will notify Licensee in writing no less than 30 days before performing such work. The written notice shall describe the nature of the work to be performed and BellSouth's schedule for performing the work.

16.4.2 If Licensee's facilities have become detached or partially detached from supporting racks or wall supports located within a BellSouth manhole, BellSouth may, at Licensee's expense, reattach them but shall not be obligated to do so. If BellSouth does not reattach Licensee's facilities, BellSouth shall endeavor to arrange with Licensee for the reattachment of any facilities affected.

16.4.3 BellSouth shall, as soon as practicable after performing the work, advise Licensee in writing of the work performed or action taken. Upon receiving such notice, Licensee may inspect the facilities and take such steps as Licensee may deem necessary to insure that the facilities meet Licensee's performance requirements.

16.5 Licensee to Bear Expenses. Licensee shall bear all expenses arising out of or in connection with any work performed to bring Licensee's facilities into compliance with this Section; provided, however that nothing contained in this Section or any license issued hereunder shall be construed as requiring Licensee to bear any expenses which, under applicable federal or state laws or regulations, must be borne by persons or entities other than Licensee or that are not reasonable.

17. UNAUTHORIZED OCCUPANCY OR UTILIZATION OF BELLSOUTH'S FACILITIES

17.1 Licensing or Removal of Unauthorized Attachments. If any of Licensee's attachments shall be found attached to pole(s) or occupying conduit systems for which no license is outstanding, BellSouth, without prejudice to its other rights or remedies under this Attachment 8, including termination of licenses, may, if such unauthorized attachments were placed by Licensee without a license, impose a charge in the amount described below, and require Licensee to submit in writing, within thirty (30) days after receipt of written notification from BellSouth of the unauthorized attachment or conduit occupancy, a pole attachment or conduit occupancy license application. If such application is not received by BellSouth within sixty (60) days, Licensee may be required at BellSouth's option to remove its unauthorized attachment or occupancy within sixty (60) days of the final date for submitting the required application, or BellSouth may at BellSouth's option after giving a minimum of 30 days prior written notice and opportunity to cure or to challenge BellSouth's determination, remove Licensee's facilities without liability, and the expense of such removal shall be borne by Licensee. Charges for any such unauthorized occupancy shall be equal to the applicable license fees and charges which would have been payable from and after the date such facilities were first placed on BellSouth's poles or in BellSouth's conduit system, if Licensee provides reasonable documentation of such placement. If Licensee is unable to provide such reasonable documentation, then Licensee will pay two years worth of the applicable charges.

17.1.1 Nothing contained in the Attachment 8 or any license issued hereunder shall be construed as requiring Licensee to bear any expenses which, under applicable federal or state laws or regulations, must be borne by persons or entities other than Licensee or that are unreasonable.

17.2 Prompt Payment of Applicable Fees and Charges. Fees and charges for unauthorized pole attachments and conduit system occupancies, as specified herein and as modified from time to time, shall be due and payable immediately whether or not Licensee is permitted to continue the pole attachment or conduit occupancy. See Exhibit A, attached hereto and incorporated herein by this reference, for applicable annual rental fees.

17.3 No Implied Waiver or Ratification of Unauthorized Use. No act or failure to act by BellSouth with regard to said unlicensed use shall be deemed as a ratification of the unlicensed use; and if any license should be subsequently issued, said license shall not operate retroactively or constitute a waiver by BellSouth of any of its rights or privileges under this Attachment 8 or otherwise; provided, however, that Licensee shall be subject to all liabilities, obligations and responsibilities of this Attachment 8 in regard to said unauthorized use from its inception.

18. REMOVAL OF LICENSEE'S FACILITIES

18.1 Pole Attachments. Licensee, at its expense, will remove its attachments from any of BellSouth's poles within thirty (30) days after termination by Licensee of this agreement or license by licensee covering such attachments. If Licensee fails to remove its attachments within such thirty (30) day period, BellSouth shall upon a

minimum of 30 days prior written notice and opportunity to cure, have the right to remove such attachments at Licensee's expense and without any liability on the part of BellSouth for damage or injury to Licensee's attachments unless caused by the negligence or intentional misconduct of BellSouth.

18.2 Conduit Occupancy. Licensee, at its expense, will remove its communications facilities from a conduit system within sixty (60) days after:

18.2.1 Termination of the license covering such conduit occupancy; or

18.2.2 The date Licensee replaces its existing facilities in one duct with substitute facilities in another duct.

18.2.3 If Licensee fails to remove its facilities within the specified period, BellSouth shall upon a minimum of 30 days prior written notice and opportunity to cure have the right to remove such facilities at Licensee's expense and without any liability on the part of BellSouth for damage or injury to such facilities unless caused by the negligence or intentional misconduct of BellSouth.

18.3 Continuing Responsibility for Fees and Charges. Unless the Parties agree otherwise, Licensee shall remain liable for and pay to BellSouth all fees and charges pursuant to provisions of this Attachment 8 until all of Licensee's facilities that are subject to the terminated Licensee are physically removed from BellSouth's poles or conduit system.

19. FEES, CHARGES, AND BILLING

19.1 License Charges. License charges commence on the first day of the calendar month following the date a license is issued. Such charges cease as of the final day of the calendar month preceding the month in which the attachment or occupancy is physically removed or the utilization is discontinued. A one-month minimum charge is applicable to all licenses.

19.2 Notice of Rate and Computation of Charges. On or about November 1 of each year, BellSouth will notify Licensee by certified mail, return receipt requested, of the rental rate and pole transfer rate to be applied in the subsequent calendar year. The letter of notification shall be incorporated in, and governed by, the terms and conditions of this Attachment 8. Attachment and occupancy rates shall be applied to the number of pole(s) and duct feet of conduit for which licenses have been issued before December 1 of each calendar year. Charges for attachment(s) and occupancy which commenced during the preceding twelve (12) month period will be prorated accordingly.

20. ADVANCE PAYMENT AND IMPUTATION

20.1 Attachment and Occupancy Fees. Fees for pole attachment and conduit occupancy shall be based on the facilities, for which licenses have been issued as of the date of billing by BellSouth, shall be computed as set forth herein.

20.1.1 Charges associated with newly licensed attachments or occupancies and other attachments or occupancies of less than the entire annual billing period shall be prorated.

20.1.2 Charges shall be prorated retroactively in the event of the removal of Licensee's facilities.

20.1.3 The amount of any advance payment required shall be due within sixty (60) days after receipt of an invoice from BellSouth.

20.2 Imputation. BellSouth shall impute to its costs of providing telecommunications services (and charge any affiliate, subsidiary, or associate company engaged in the provision of such services) an equal amount to the charges set forth in this Section for all of the conduits, ducts, and poles it occupies and uses.

21. ASSURANCE OF PAYMENT

21.1 Necessity and Level of Security. In the event Licensee fails to demonstrate credit worthiness, Licensee may be required to furnish a bond, letter of credit or other evidence of financial security having a minimum face amount of $10,000.00 per state or $50,000.00 per region. Such bond, letter of credit or other security shall be in a form satisfactory to BellSouth and may be increased from time to time as reasonably required by BellSouth to guarantee the performance of all obligations of Licensee hereunder. The amount of the bond, letter of credit or other security shall not operate as a limitation upon the obligations of Licensee hereunder.

22. INSURANCE

22.1 Insurance is in the General Terms and Conditions of this agreement.

23. INDEMNIFICATION

23.1 Indemnification is in the General Terms and Conditions of this Agreement...

24. AUTHORIZATION NOT EXCLUSIVE

24.1 Nothing herein contained shall be construed as a grant of any exclusive authorization, right or privilege to Licensee. BellSouth shall have the right to grant, renew and extend rights and privileges to others not parties to this Attachment 8, by contract or otherwise, to use any Pole, Anchor, or Conduit System covered by this Attachment 8 and Licensee's rights hereunder.

25. ASSIGNMENT OF RIGHTS

25.1 Any assignment by either Party of any right, obligation, or duty under this Attachment 8 in whole or part, or of any interest in this Attachment 8, without the written consent of the other Party (such consent not to be unreasonably withheld or delayed) shall be void. Notwithstanding the above, either Party, upon written notice to the other Party, may without first obtaining the consent of the other Party assign this Attachment 8 and any of its rights and privileges under this Attachment 8, in whole or in part, to: (1) its parent, partners or their respective subsidiaries, affiliates or successors; (2) any entity which controls, is under the control of, or is under common control with the assigning Party; or 3) any entity

that purchases all or substantially all of the assets or stock of the assigning Party by way of merger, acquisition, or consolidation or stock.

25.2 In the event such consent or consents are granted by BellSouth, then the provisions of this Attachment 8 shall apply to and bind the successors and assigns of the Licensee. Form NT-13 shall be used for this purpose.

26. FAILURE TO ENFORCE

26.1 Failure of either Party to enforce or insist upon compliance with any of the terms or conditions of this Attachment 8 or to give notice or declare this Attachment 8 or any authorization granted hereunder terminated shall not constitute a general waiver or relinquishment of any term or condition of this Attachment 8, but the same shall be and remain at all times in full force and effect.

27. DISPUTE RESOLUTION

27.1 When a dispute arises under this Attachment, either Party may avail itself of the complaint procedures set forth in 47 C.F.R. Ch. I, Subpart J--Pole Attachment Complaint Procedures, ¶¶ 1.1401-1.1416. If the dispute arises in a state that has certified to the PSC that is has its own program for poles, conduits and rights-of-way, either Party may pursue its remedies in the state forum.

27.1 Termination of this Attachment 8 or any licenses issued hereunder shall not affect Licensee's liabilities and obligations incurred hereunder prior to the effective date of such termination.

28. SUPERSEDURE OF PREVIOUS AGREEMENT(S)

28.1 This Attachment 8 supersedes all previous agreements, whether written or oral, between BellSouth and Licensee for attachment and maintenance of Licensee's Communications Facilities on Pole(s), Anchor(s), and in Conduit Systems within the geographical area covered by this Attachment 8; and there are no other provisions, terms or conditions to this Attachment 8 except as expressed herein. All currently effective licenses heretofore granted pursuant to such previous agreements shall be subject to the terms and conditions of this Attachment 8.

29. Rates

29.1 Pole attachment rates hereunder shall be established pursuant to the provision of and formulas set forth in the Pole Attachment act, regulations issued pursuant thereto, and interpretations thereof by governmental authorities with jurisdiction over such matters.

2006 FCC Formula Supported Fees
for attachments and/or occupancy effective 1/1/2006
(Re-calculated annually)

Licensee shall pay to Licensor the following fees:

State	Poles (ea. / yr.)		Anchors (ea. / yr.)	Conduit	
					($ / ft. /
	Non-	Urban			
Alabama	$9.24	$6.13	Same as poles		$0.16
Kentucky ①					$0.70
2-user	$ 9.45	$9.45	$12.90		
3-user	$5.35	$5.35	$8.60		
Louisiana	$6.90③	$6.90③			$0.37
Mississippi	$7.57	$5.02			$ 2.50 ②
Tennessee	$10.90	$7.24			$0.26
Florida	$8.10	$5.37			$0.31
			Miami River crossing		$17.13
Georgia	$8.87	$5.88			$0.22
North Carolina	$7.58	$5.03			$0.24
South Carolina	$5.31	$3.52			$0.24

① Kentucky rates are currently equal to tariff rates; to be re-calculated annually per FCC formula

② Tariff rate in Mississippi

③ Louisiana pole rates determined by the Louisiana PSC.

Urban and non-urban are defined by the Bureau of Census as follows: Urban is a city plus the closely-settled urban fringe that together have a minimum population of 50,000. Non-urban is less than 50,000.

Conduit rates will apply to each passageway (innerduct).

i) For the purpose of determining the Duct feet chargeable, the Duct considered occupied shall be measured from the center to center of adjacent Manhole(s), or from the center of a Manhole to the end of a Duct not terminated in a Manhole.

ii) The above rates are not applicable for crossings of any navigable waterway. Rates for navigable waterway crossings will be calculated on an individual case basis.

Pole Attachment Transfer Rate

Per Pole (throughout BellSouth region)	$41.00

Records Maintenance Centers

For all states

Plant Records

Records Maintenance Center
5228 Central Avenue
Charlotte, NC 28212

Right of Way Records

Regional Landbase Admin. Center
Attn.: Right of Way Records
16 GG 1 BellSouth
301 W. Bay Street

Jacksonville, FL 32201

Attachment 9

Service Quality Measurements

Version 3Q03: 12/10/2003

SERVICE QUALITY MEASUREMENTS

Upon a particular Commission's issuance of an Order pertaining to Service Quality Measurements and remedy plans in a proceeding expressly applicable to all CLECs generally, BellSouth shall implement in that state such Service Quality Measurements and remedy plans as of the date specified by the Commission. Service Quality Measurements that have been Ordered in a particular state can currently be accessed via the internet at <http://pmap.bellsouth.com>.

Attachment 10

Bona Fide Request and New Business Request Process

BONA FIDE REQUEST AND NEW BUSINESS REQUEST PROCESS

1.0 The Parties agree that AT&T is entitled to order any Unbundled Network Element, Interconnection option, service option or Resale Service required to be made available by FCC or Commission requirements pursuant to the Communications Act of 1934, as modified by the Telecommunications Act of 1996 (the "Act"). AT&T also shall be permitted to request the development of new or revised facilities or service options, which are not required by the Act. Procedures applicable to requesting the addition of such facilities or service options are specified in this Attachment 10.

2.0 BONA FIDE REQUEST

2.1 A Bona Fide Request (BFR) is to be used when AT&T makes a request of BellSouth to provide a new or modified Unbundled Network Element, Interconnection option, product delivery process or option, not otherwise subject to the CCP, or other service option (Requested Services) pursuant to the Act that was not previously included in this Agreement.

2.2 A BFR shall be submitted in writing by AT&T and shall specifically identify the requesting party (AT&T SPOC), the requested service date, technical requirements, space requirements and/or such other specifications that clearly define the request such that BellSouth has sufficient information to analyze and prepare a response. Such a request shall also include AT&T's designation of the request as being pursuant to the Telecommunications Act of 1996 (i.e. a BFR). The request shall be sent to AT&T's designated BellSouth Sales contact.

2.3 If BellSouth determines that the preliminary analysis of the BFR is of such complexity that it will cause BellSouth to expend inordinate resources to evaluate the BFR, BellSouth will notify AT&T within ten (10) business days of BellSouth's receipt of the BFR that a fee will be required prior to the evaluation of the BFR. Such fee shall be limited to BellSouth's extraordinary expenses directly related to the complex request that required the allocation and engagement of additional resources above the existing allocated resources used on BFR cost development which include, but are not limited to, expenditure of funds to develop feasibility studies, specific resources that are required to determine request requirements (such as operation support system analysts, technical managers, software developers), software impact analysis by specific software developers; software architecture development, hardware impact analysis by specific system analysts, etc. The evaluation performed by BellSouth and provided

to AT&T will include a detailed breakdown of the cost supporting the proposed fee, including the development costs to complete the preliminary analysis. AT&T shall submit such fee within thirty (30) business days of BellSouth's notice that a fee is required. Within thirty (30) business days of BellSouth's receipt of the fee, BellSouth shall respond to AT&T by providing a preliminary analysis of such Requested Services that are the subject of the BFR.

2.4 Within two (2) business days of receipt of a BFR, BellSouth shall acknowledge in writing to the AT&T SPOC its receipt of the request and identify its single point of contact (BellSouth SPOC) responsible for responding to the request and shall request any additional information needed to process the request. Notwithstanding the foregoing, BellSouth may reasonably request additional information from AT&T at any time during the processing of the BFR/NBR. BellSouth shall respond to AT&T by providing a preliminary analysis of such Requested Services that are the subject of the BFR within thirty (30) calendar days of its receipt of the request or receipt of fee as set forth in 2.3 above, or notify AT&T that it needs more time to provide AT&T with its preliminary analysis. Should BellSouth require more time to deliver the preliminary analysis, AT&T and BellSouth will then determine a mutually agreeable date for delivery of the preliminary analysis. The preliminary analysis shall either confirm that BellSouth will offer access to the Requested Services or confirm that BellSouth will not offer the Requested Services. If the preliminary analysis states that BellSouth will not offer the Requested Services, BellSouth will provide an explanation of why the request is not technically feasible, does not qualify as a BFR for the Requested Services or is otherwise not required to be provided under the Act.

2.5 The preliminary analysis will state whether BellSouth can meet AT&T's requirements and shall include BellSouth's proposed price plus or minus 25 percent ("the Preliminary Analysis Range") and the date plus or minus 10 business days that BellSouth can meet the request. If BellSouth cannot provide the Services by AT&T's requested date, it shall provide an alternative proposed date. The preliminary analysis also will include a detailed breakdown of the costs supporting the proposed price, including the development costs necessary to complete AT&T's BFR. BellSouth also shall indicate, prior to evaluation of the request, its agreement or disagreement with AT&T's designation of the request as an obligation under the Telecommunications Act of 1996. If BellSouth does not agree with AT&T's designation, it may use the dispute resolution process set forth in Section 16 of the General Terms and Conditions of this Agreement, incorporated herein by this reference.

2.6 AT&T may cancel a BFR at any time. If AT&T cancels the request more than ten (10) business days after submitting the BFR request, AT&T shall pay BellSouth's reasonable and demonstrable costs of processing and/or implementing the BFR up to the date of cancellation. Documentation of BellSouth's incurred costs will be provided to AT&T.

2.7 AT&T will have thirty (30) business days from receipt of preliminary analysis to accept the preliminary analysis or cancel the BFR as set forth in Section 2.5. If AT&T fails to respond within this 30-day period, the BFR will be deemed cancelled and BellSouth will use best efforts to notify AT&T that the order is pending cancellation. Acceptance of the preliminary analysis must be in writing and accompanied by all nonrecurring charges quoted in the preliminary analysis. The nonrecurring charges as stated in the preliminary analysis cover the initial work required to develop the project plan, create the design parameters, and establish all activities and resources required to complete the BFR (Development Costs). Development costs are non-refundable. AT&T will begin processing the payment of development costs at the time it issues the written "notice to proceed" with payment due to BellSouth within 15 days of the issuance of the notice to proceed.

2.8 BellSouth shall propose a firm price quote and a detailed implementation plan within thirty (30) business days of receipt of AT&T's acceptance of the preliminary analysis.

2.9 AT&T shall have thirty (30) business days from receipt of firm price quote to accept or deny the firm price quote and submit any additional nonrecurring, non-refundable fees quoted in the firm price quote.

2.10 Unless AT&T agrees otherwise, all prices shall be consistent with the pricing principles of the Act, FCC and/or the Commission.

2.11 If AT&T believes that BellSouth's firm price quote is not consistent with the requirements of the Act, or if either Party believes that the other is not acting in good faith in requesting, negotiating or processing the BFR, either Party may seek FCC or Commission arbitration, as appropriate, to resolve the dispute. Any such arbitration applicable to Unbundled Network Elements and/or Interconnection shall be conducted in accordance with standards prescribed in Section 252 of the Act.

2.12 Upon agreement to the rates, terms and conditions of a BFR, an amendment to this Agreement may be required.

3.0 NEW BUSINESS REQUEST

3.1 A New Business Request (NBR) is to be used by AT&T to make a request of BellSouth for a new or modified feature or capability of an existing product or service, a new product or service that is not deployed within the BellSouth network or operations and business support systems, product delivery process or option, not otherwise subject to the CCP, or a new or modified service option that was not previously included in this Agreement (Requested Enhanced Services).

3.2 An NBR shall be submitted in writing by AT&T and shall specifically identify the requesting party (AT&T SPOC), the requested service date, technical requirements, space requirements and/or such specifications that clearly define the request such that BellSouth has sufficient information to analyze and prepare a response. The request shall be sent to AT&T's designated BellSouth Sales contact.

3.3 If BellSouth determines that the preliminary analysis of the NBR is of such complexity that it will cause BellSouth to expend inordinate resources to evaluate the NBR, BellSouth will notify AT&T within ten (10) business days of BellSouth's receipt of the NBR that a fee will be required prior to the evaluation of the NBR. BellSouth will provide AT&T a report as to why the funds are needed and the types of resources that will be needed in order to evaluate the NBR. The evaluation performed by BellSouth and provided to AT&T will include a detailed breakdown of the cost supporting the proposed fee, including the development costs to complete the preliminary analysis AT&T shall submit such fee within thirty (30) business days of BellSouth's notice that a fee is required. Within thirty (30) business days of BellSouth's receipt of the fee, BellSouth shall respond to AT&T by providing a preliminary analysis of such Requested Services that are the subject of the NBR.

3.4 Within two (2) business days of receipt of a NBR, BellSouth shall acknowledge in writing to the AT&T SPOC its receipt of the request and identify its single point of contact (BellSouth SPOC) responsible for responding to the request and shall request any additional information needed to process the request. Notwithstanding the foregoing, BellSouth may reasonably request additional information from AT&T at any time during the processing of the NBR. BellSouth shall respond to AT&T by providing a preliminary analysis of such Requested Services that are the subject of the NBR within thirty (30) calendar days of its receipt of the request or receipt of fee as set forth in 3.3 above, or notify AT&T that it needs more time to provide AT&T with its preliminary analysis. Should BellSouth require more time to deliver the preliminary analysis, AT&T and BellSouth will then determine a mutually agreeable date for delivery of the preliminary analysis. The preliminary analysis shall either confirm that BellSouth will offer access to the Requested Services or confirm that

BellSouth will not offer the Requested Services. If the preliminary analysis states that BellSouth will not offer the Requested Services, BellSouth will provide an explanation of why the request is not technically feasible, does not qualify as a NBR for the Requested Services or is otherwise not required to be provided under the Act.

3.5 AT&T may cancel an NBR at any time. If AT&T cancels the request more than ten (10) business days after submitting it, AT&T shall pay BellSouth's reasonable and demonstrable costs of processing and/or implementing the NBR up to the date of cancellation.

3.6 AT&T will have thirty (30) business days from receipt of preliminary analysis to accept the preliminary analysis or cancel the NBR as set forth in section 3.4. If AT&T fails to respond within this 30-day period, the NBR will be deemed cancelled and BellSouth will use best efforts to notify AT&T that the order is pending cancellation. Acceptance of the preliminary analysis must be in writing and accompanied by all nonrecurring charges quoted in the preliminary analysis. The nonrecurring charges as stated in the preliminary analysis cover the initial work required to develop the project plan, create the design parameters, and establish all activities and resources required to complete the NBR. AT&T will begin processing the payment of development costs at the time it issues the written "notice to proceed" with payment due to BellSouth within 15 days of the issuance of the notice to proceed.

3.7 If AT&T accepts the preliminary analysis, BellSouth shall propose a firm price quote and a detailed implementation plan within thirty (30) business days of receipt of AT&T's acceptance of the preliminary analysis and nonrecurring fees quoted in the preliminary analysis.

3.8 AT&T shall have thirty (30) business days from receipt of the firm price quote to accept or deny the firm price quote and submit any additional nonrecurring, non-refundable fees quoted in the firm price quote.

3.9 Upon agreement to the terms of a NBR, an amendment to this Agreement, or a separate agreement, may be required.

ATTACHMENT 11

NETWORK SECURITY

NETWORK SECURITY

1. **Network Security – Protection of Service and Property**

1.1 BellSouth agrees to take reasonable and prudent steps to ensure adequate protection of AT&T property located with BellSouth Premises including, but not limited to:

1.1.1 Controlling all approved system and modem access through security servers. Access to, or connection with, a network element shall be established through a secure network or security gateway and/or firewall. Dial-up access to modems connected to network entry points must be protected by individual authentication of the user, e.g., via Network Access passwords, smart cards, tokens;

1.1.2 A security software package will be used, or at a minimum, perform manual checks that monitor user and machine integrity and confidentiality, such as password assignment and aging, directory and permission configuration, and system accounting data; and

1.1.3 Maintain accurate and complete records detailing the individual data connections and systems to which they have granted the other party access or interface privileges. These records will include, but are not limited to, login identification, user request records, system configuration, time limits of user access or system interfaces.

ATTACHMENT 12

ACRONYMS

ACRONYM	DEFINITION
AABS	Automated Alternate Billing System (AABS)
ACAC	Access Customer Advocate Center
ACNA	Access Customer Name and Abbreviation
ADA	Americans with Disabilities Act
ADSL	Asynchronous Digital Subscriber Line
AIN	Advanced Intelligent Network
ALEC	Alternative Local Exchange Carrier
ALI/DMS	Automatic Location Identification/Data Management Systems
AMA	Automatic Message Accounting
AMI	Alternate Marked Inversion
ANI	Automatic Number Identification
ANSI	American National Standards Institute
ASPR	AT&T Security Policy and Requirements
ASR	Access Services Request
ASWC	AT&T Serving Wire Center
ATCC	Account Team Collocation Coordinator
ATIS	Alliance for Telecommunications Industry Solutions
ATM	Asynchronous Transfer Mode
BACR	Billing Account Cross Reference
BAN	Billing Account Number
BAPCO	BellSouth Advertising and Publishing Company
BAR	Billing Account Reference
BDFB	Battery Distribution Fuse Bay
BFFO	Bona Fide Firm Order
BFR/NBR	Bona Fide Request/New Business Request
BLV	Busy Line Verification
BLV/BLI	Busy Line Verification/Busy Line Interrupt
BLV/BLVI	Busy Line Verification/Busy Line Verification Interrupt
BLV/ELI	Busy Line Verification/Emergency Line Interrupt
BMP	Best Management Practices
BNS	Billed Number Screening
BOC	Bell Operating Company
BOS	Billing Output Specifications
BPOI	Billing Point of Interconnection
BRI	Basic Rate ISDN
BSWC	BellSouth Serving Wire Center
CAA	Clean Air Act
CABS	Carrier Access Billing Systems
CAMA	Centralized Automatic Message Accounting
CARE	Customer Account Record Exchange

CATS	Calling Card and Third Number Settlement System
CATV	Cable Television
CBOS	CABS Billing Output Specifications
CCC	Clear Channel Capability
CCITT	Consultative Committee on International Telegraph & Telephone
CCL	Common Carrier Line
CCP	Change Control Process
CCS	Common Channel Signaling
CCSAS	Common Channel Signaling Access Service
CCSNIS	Common Channel Signaling Network Interface Specification
CCXC	Co Carrier Cross Connect
CERCLA	Comprehensive Environmental Response Compensation and Liability Act
CI	Customer Interface
CIC	Carrier Identification Code
CFA	Circuit Facility Assignment
CF/B	Call Forward on Busy
CF-B/DA	Call Forward on Busy/Don't Answer
CF/DA	Call Forward Don't Answer
CFR	Code of Federal Regulations
CPN	Calling Party Number
CLASS	Custom Local Area Signaling Service
CLEC	Competitive Local Exchange Carrier
CLLI	Common Language Location Identifier
CLLIC	Common Language Location Identifier Code
CLUB	Customized Large User Bill
CMDS	Centralized Message Distribution System
CMRS	Commercial Mobile Radio Service
CNL	Carrier Notification Letter
CO	Central Office
COCI	Central Office Channel Interface
CPE	Customer Premises Equipment
CRIS	Customer Record Information System
CRSG	Complex Resale Support Group
CSA	Contract Service Arrangement
CSIQ	Customer Service Information Query
CSOTS	Customer Service Order Trouble System
CSR	Customer Service Record
CT	Common Transport
CWA	Clean Water Act

CWINS	Customer Wholesale Interconnection Network Services
DA	Directory Assistance
DADAS	Direct Access to Directory Assistance Service
DADS	Directory Assistance Database Service
DB	Database
DCC	Data Communications Channel
DCS	Digital Cross-Connect System
DDD	Desired Due Date
DID	Direct Inward Dialing
DLC	Digital Loop Carrier
DLR	Design Layout Record
DMOQs	Direct Measures of Quality
DN	Directory Numbers
DN-RI	Directory Number - Route Index
DS-0	Digital Signal Level Zero
DS-1	Digital Signal Level One
DS-3	Digital Signal Level Three
DRAM	Digital Recorded Announcement Machine
DSLAM	Digital Subscriber Line Access Multiplexer
DSN	Data Set Name
DSX	Digital Cross Connect
DT	Dedicated Transport
DTMF	Dual-Tone Multi Frequency
DTN	Destination Telephone Number
EAMF	Equal Access Multi-Frequency
EBAS	Enhanced Billing and Access Service
EBCDIC	Extended Binary-Coded Decimal Interchange Code
ECTA	Exchange Carrier Trouble Analysis
EDI	Electronic Data Interface
EDI-PC	Electronic Data Interface – Personal Computer
EFT	Electronic Funds Transfer
EI	Electronic Interface
EI	Emergency Interrupt
EIU	Equipment Inventory Update
ELI	Emergency Line Interrupt
EMI	Exchange Message Interface
EMR	Exchange Message Record
EO	End Office
EODUF	Enhanced Optional Daily Usage File
E/O	Electrical to Optical
EPA	Environmental Protection Agency
ESD	Estimated Service Date

ESF	Extended Super Frame
ESIT	Exchange Service Interconnection Traffic
ESP	Enhanced Service Provider
ETTR	Estimated Time to Repair
FB	Flat Rate Business Line
FCC	Federal Communications Commission
FDI	Feeder Distribution Interface
FGA	Feature Group A
FGB	Feature Group B
FGD	Feature Group D
FL	Foreign Listing
FOC	Firm Order Confirmation
FR	Flat Rate Residential Line
FRS	Functional Requirements Specification
FSPOI	Facilities Signaling Point of Interconnection
FTTH	Fiber to the Home
FX	Foreign Exchange
GSST	General Subscriber Services Tariff
GSTP	Gateway Signaling Transfer Point
GTT	Global Title Translation
HDSL	High-bit-rate Digital Subscriber Line
HFC	Hybrid Fiber Coax
HVAC	Heating/Ventilation/Air Conditioning
IAM	Initial Address Message
IBC	Initial Billing Company
ID	Remote Identifiers
IID	? used in collo att
IDLC	Integrated Digital Loop Carrier
IEEE	Institute of Electrical and Electronic Engineers
IITP	Internetwork Interoperability Test Plan
ILEC	Incumbent Local Exchange Carrier
INC	Industry Numbering Committee
INP	Interim Number Portability
IOF	Interoffice Facility
IP	Internet Protocol
IPP	Independent Payphone Provider
ISDN	Integrated Services Digital Network
ISDNUP	Integrated Services Digital Network User Part
ISNI	Intermediate Signaling Network Identifier
ISP	Internet Service Provider
ISUP	Integrated Services User Part
ITU	International Telecommunications Union
IVS	Interactive Voice Subsystem
IVMS	Interswitch Voice Messaging Service

IXC	Interexchange Carrier
JIA	Joint Implementation Agreement
JIP	Jurisdiction Information Parameter
LATA	Local Access Transport Area
LCC	Line Class Code
LCSC	Local Carrier Service Center
LEC	Local Exchange Carrier
LENS	Local Exchange Navigation System
LERG	Local Exchange Routing Guide
LGX	Lightguide Cross-Connect
LMU	Loop Make-up
LIDB	Line Information Database
LNP	Local Number Portability
LOA	Letter of Authorization
LPIC	Local (IntraLata) Primary Exchange Carrier
LRN	Local Routing Number
LRN-LNP	Local Routing Number-Local Number Portability
LRN-PNP	Local Routing Number-Permanent Number Portability
LSR	Local Service Request
LSSGR	LATA Switching Systems Generic Requirements
MDF	Main Distribution Frame
MDU	Multiple Dwelling Unit
MECAB	Multiple Exchange Carrier Access Billing
MECOD	Multiple Exchange Carrier Ordering and Design
MF	Multi-Frequency
MLT	Mechanized Loop Tests
MOP	Method of Procedure
MPB	Meet-Point Billing
MPOE	Minimum Point of Entry
MRC	Monthly Recurring Charge
MRVT	MTP Routing Verification Test
MSAG	Master Street Address Guide
MSDS	Material Safety Date Sheets
MTA	Multiple Tandem Access
MTP	Message Transfer Port
MTTR	Mean Time to Repair
MWI	Message Waiting Indicator
NANC	North American Numbering Council
NAV	Network Applications Vehicle
NC	Network Cable
NEBS	Network Equipment Building System
NEC	National Electrical Code

NECA	National Exchange Carrier Association
NESC	National Electrical Safety Code
NGDLC	Next Generation Digital Loop Carrier
NICS	Non-Intercompany Settlement System
NID	Network Interface Device
NIU	Network Interface Unit
NPA	Numbering Plan Area
NPAC	Number Portability Administration Center
NRC	Non-recurring Charge
NTW	Network Terminating Wire
NXX	Three-Digit Central Office Code (N=2-9, X=0-9)
OAM	Operation and Maintenance
OAM&P	Operations Administration Maintenance & Provisioning
OBF	Ordering and Billing Forum
OC	Order Coordination
OC-TS	Order Coordination Time Specific
OC-N	Optical Circuit – (Number)
OCN	Operating Company Number
OSHA	Occupational Safety and Health Act
ODUF	Optional Daily Usage File
OLI	Originating Line Information
OLNS	Originating Line Number Screening
OMAP	Operations, Maintenance & Administration Part
ORT	Operational Readiness Test
OS	Operator Services
OSHA	Occupational Safety and Health Administration
OSS	Operational Support Systems
OTS	Operator Transfer Service
PBX	Private Branch Exchange
PCBs	Polychlorinated biphenyls
PDH	Plesiochronous Digital Hierarchy
PIC	Primary Interexchange Carrier
PIN	Personal Identification Number
PIU	Percent Interstate Usage
PLU	Percent Local Usage
PNP	Permanent Number Portability
POI	Point of Interface
POI	Points of Interconnection
PON	Purchase Order Number
POP	Point of Presence
POT	Point of Termination
POTS	Plain Old Telephone Service
PSAP	Public Safety Answering Point
PSTN	Public Switched Telecommunications Network

PUC	Public Utilities Commission
RACF	Remote Access Call Forwarding
RAO	Revenue Accounting Office
RCA	Root Cause Analysis
RCF	Remote Call Forwarding
RCM	Regional Contact Manager
RCRA	Resource Conservation and Recovery Act
RI	Route Index
RIC	Residual Interconnection Charges
RI-PH	Route Index - Portability Hub
ROW	Right of Way
RSAG	Regional Street Address Guide
RSM	Remote Switch Module
RT	Remote Terminal
SAG	Street Address Guide
SBC	Subsequent Billing Company
SCCP	Signaling Connection Control Point
SCE	Service Creation Environment
SCE/SMS	Service Creation Environment and Service Management System
SCP	Service Control Points
SCR-LCC	Selective Call Routing Using Line Class Codes
SDH	Synchronous Digital Hierarchy
SEC LOC	Secondary Location
SECAB	Small Exchange Carrier Access Billing
SIC	Standard Industrial Code
SL1	Service Level One
SL2	Service Level Two
SMDI	Simplified Message Desk Interface
SMDI-E	Simplified Message Desk Interface - Enhanced
SMS	Service Management System
SONET	Synchronous Optical Network
SP	Signaling Point
SPID	Service Profile Identifier
SPNP	Service Provider Number Portability
SPNP-RCF	Service Provider Number Portability-Remote Call Forwarding
SPNP-LERG	Service Provider Number Portability-Local Exchange Routing Guide
SPNP-DID	Service Provider Number Portability-Direct Inward Dialing
SPNP-RI	Service Provider Number Portability-Route Indexing
SPOC	Single Point of Contact
SPOI	Signaling Point of Interconnection
SQM	Service Quality Measurements
SRVT	SCCP Routing Verification Test

SS7	Signaling System 7
SSP	Switching Service Point
STP	Signaling Transfer Point
STPS	Signaling Transfer Point Switch
STS	Synchronous Transport Signal
SWA	Interexchange Carrier Switched Access
TAFI	Trouble Analysis Facilitation Interface
TAG	Telecommunications Access Gateway
TC	Transaction Code
TCAP	Transaction Capabilities Application Port
TELRIC	Total Element Long Run Incremental Cost
TGSR	Trunk Group Service Request
TIA/EIA	Telecommunications Industries Association/Electronic Industries Association
TLN	Telephone Line Number
TNS	Transit Network Selection
TOPS	Traffic Operator Position System
TR	Technical Reference
TR	Technical Requirements
TS	Tandem Switching
TSGR	Transport System Generic Requirements
UCL	Unbundled Copper Loop
UDL	Unbundled Digital Loop
UDLC	Universal Digital Loop Carrier
ULM	Unbundled Loop Modification
UNE	Unbundled Network Element
UNE-L	Unbundled Network Element-Loop
UNTW	Unbundled Network Terminating Wire
USEPA	US Environmental Protection Agencies
USL	Unbundled Subloop
USLC	Unbundled Subloop Concentration System
USOC	Universal Service Order Code
UVL	Unbundled Voice-grade Loop
V&H	Vertical and Horizontal
VOIP	Voice Over Internet Protocol
WTN	Working Telephone Number
xDSL	Digital Subscriber Line

Other acronyms used but not defined in this Agreement that are not included in this list, shall have the meanings ascribed to them in the Act, the rules and regulations of the FCC or the Commission. Other acronyms used in this Agreement that are not defined or ascribed as stated above shall be construed in accordance with their customary usage in the telecommunications industry.